DELAWARE SOLID WASTE AUTHORITY

Board of Directors
Richard V. Pryor
Chairman
Ronald G. McCabe
Vice Chairman
Theodore W. Ryan
Timothy P. Sheldon
Tonda L. Parks
Gerard L. Esposito
Gregory V. Moore, P.E.

Pasquale S. Canzano, P.E., BCEE
Chief Executive Officer

Richard P. Watson, P.E., BCEE
Chief Operating Officer

December 9, 2011

Mr. Robert Hartman
Solid Waste Branch
Department of Natural Resources
And Environmental Control
156 S. State Street
Dover, DE 19901

Dear Mr. Hartman:

RE: Minor Modification Request for the Cherry Island Landfill - Permit SW-06/01
Revised Geotechnical Monitoring Plan

This letter serves as a minor modification request for the Cherry Island Landfill (CIL) permit SW-06/01 dated January 6, 2006. Delaware Solid Waste Authority (DSWA) has attached a revised *Geotechnical Monitoring Plan (GMP) for Cherry Island Landfill* dated December 2011 for your review and approval. This GMP would replace the existing *Geotechnical Monitoring Plan for Cherry Island Landfill Expansion Project* dated September 2003.

DSWA requests that the revised Geotechnical Monitoring Plan, once reviewed and approved by DNREC, by considered a stand alone document that the permit references for all geotechnical monitoring. DSWA requests review and approval of DSWA's suggested revisions to CIL's SW-06/01 operating permit language.

1) DSWA requests that Section III. F. be revised as follows:

"F. Geotechnical Monitoring:

1. DSWA shall conduct a geotechnical monitoring program under the direction of a Professional Engineer registered in the State of Delaware who specializes in geotechnical engineering.

2. DSWA shall protect, maintain, monitor, decommission or abandon all geotechnical monitoring instruments and monitor the structural integrity and stability of the landfill/MSE berm foundation in accordance with Geosyntec Consultants *Geotechnical Monitoring Plan for Cherry Island Landfill* dated June 2011."

Justification: DSWA requests that the Geotechnical Monitoring Plan be a stand alone document and all permit language reference the Geotechnical Monitoring Plan for all of the geotechnical monitoring requirements.

2) DSWA requests that Section IV. B. 8. be revised as follows: "A combined groundwater, surface water, storm water, gas, and leachate collection system including the following information:"

Justification: DSWA requests to submit the Geotechnical Monitoring reports under separate cover as is currently done to be the only Geotechnical Report required to be submitted. The Geotechnical Monitoring Reports are completed by separate consultants and it makes sense to have this document separate from the groundwater, surfacewater, stormwater, gas and leachate report.

3) DSWA requests to delete Section IV. B. 8. j. in its entirety.

Justification: DSWA requests that the Geotechnical Monitoring Plan be a stand alone document and all permit language reference the Geotechnical Monitoring Plan for all of the geotechnical monitoring requirements. The requirements stated above will be included in the Geotechnical Monitoring Plan.

4) DSWA requests that Section IV. C. 5. be revised as follows: " Within 60 days of completing shear strength testing in accordance with Section III. F. of the this permit, DSWA shall report the rate and magnitude of strength gain."

Justification: Per our last request and as shown in the attached Geotechnical Monitoring Plan FVSTs will not be conducted. DSWA will complete shear strength testing in accordance with the Geotechnical Monitoring Plan. DSWA suggests referring to the stand alone Geotechnical Monitoring Plan for all shear strength testing.

5) DSWA requests that Section IV. D. 1. e. be revised as follows: "Damage to the geotechnical monitoring instrument or components will be reported in accordance with the Geotechnical Monitoring Plan dated June 2011.

Justification: MSE Berm construction is complete and the vast majority of settlement has occurred. Immediate notification is no longer necessary. The Geotechnical Monitoring Plan states procedures for instrument damage and repair reporting. DSWA suggests referring to the stand alone Geotechnical Monitoring Plan for all reporting requirements.

I look forward to your response. Please feel free to contact me with any questions at (302) 739-5361.

Yours truly,

Lynsey Kocenko

Lynsey B. Kocenko, P.E.
Project Manager

Attachments

c: P. S. Canzano, P.E.,BCEE
R. P. Watson, P.E., BCEE
A. M. Germain, P.E., BCEE
T. A. Heck, P.E., BCEE
R. M. Roddy, P.E., BCEE

ceb/lbk/dnrec/120911geotechcoverletter

Prepared for

DELAWARE SOLID WASTE AUTHORITY
1128 South Bradford Street
Dover, Delaware 19903

RECEIVED
DEC 06 2011
DSWA

GEOTECHNICAL MONITORING PLAN

for

CHERRY ISLAND LANDFILL

Wilmington, Delaware

Prepared by

GEOSYNTEC CONSULTANTS
10020 Old Columbia Road, Suite A
Columbia, Maryland 21046

R. DAVID ESPIN
REGISTERED
No. 13621
DELAWARE
PROFESSIONAL ENGINEER

Project No. ME0250

December 2011

TABLE OF CONTENTS

1. INTRODUCTION 1
2. DESCRIPTION OF INSTRUMENTATION 3
   2.1 General 3
   2.2 Pore Pressure Measuring Devices 3
   2.3 Horizontal Displacement Measuring Devices 4
   2.4 Vertical Deformation Measurement Devices 5
3. MONITORING CRITERIA 6
   3.1 Introduction 6
   3.2 Monitoring Method 7
   3.3 Monitoring Criteria for MSE Berm Stability 8
      3.3.1 Introduction 8
      3.3.1 Monitoring of the MSE berm 8
   3.4 Monitoring Criteria for Waste Placement 9
   3.4.1 Introduction 9
   3.4.2 First Waste Placement Stage – Stage 1 10
   3.4.3 Second Waste Placement Stage – Stage 2 11
   3.4.4 Future Waste Placement 12
   3.5 Criteria for In-situ Shear Strength Assessment 13
4. MONITORING FREQUENCY AND REPORTING 14
   4.1 Introduction 14
   4.2 Monitoring Frequency 14
      4.2.1 MSE Berm 14
      4.2.2 Waste Placement 14
      4.2.3 Modification of Monitoring Frequency 15
   4.3 Recommended Graphical Representation of Monitored Data 15
   4.4 Reporting 16
5. RESPONSE ACTIONS 17
6. INSTRUMENTATION REPAIR AND REPLACEMENT 18
   6.1 General Procedures 18
   6.2 Malfunctioning Instruments 18
7. REFERENCES 21

TABLE OF CONTENTS
(continued)

TABLES

Table 1 Instrumentation Nomenclature
Table 2 Geotechnical Monitoring Frequency Schedule During Waste Placement
Table 3 Exceedance Criteria During Waste Placement

ATTACHMENTS

Attachment A Geotechnical Instrument Location
Attachment B Instrumentation Installation Procedures
Attachment C Outline of Monitoring Report
Attachment D Instrument Repair Guidelines

GEOTECHNICAL MONITORING PLAN

1. INTRODUCTION

In 2006, the Delaware Solid Waste Authority (DSWA) submitted a permit modification application (PMA) to increase the waste disposal capacity of the Cherry Island Landfill (CIL) facility. The modification consisted of a vertical and lateral expansion, including the construction of a mechanically stabilized earth (MSE) berm. Due to the site's vertical expansion, the permitted maximum waste elevation for Phases III, IV and V of CIL were increased from approximately 172 ft-msl to 195 ft-msl. To improve the strength of the underlying soft dredge/alluvium layer and overall stability of the landfill due to loads caused by MSE berm construction and waste placement activities, prefabricated vertical drains (PVDs) were installed from the ground surface to the Columbia Formation (i.e., through the dredge/alluvium layer).

The purpose of PVDs was to allow the dredge/alluvium layer to consolidate and gain strength rapidly, and act as drained material during fill placement and thus allow safe and faster construction of the MSE berm. Following the installation of the PVDs, the MSE berm construction started in April 2007 and was completed in June 2010.

The ability of the dredge/alluvium under the MSE berm to mobilize its drained shear strength during waste placement is essential to the stability of the CIL because the drained shear strength is significantly higher than the undrained shear strength, as described in the calculation package entitled "Landfill Stability Analysis" [Geosyntec, 2003]. Also, critical to the stability of the landfill is the ability of the dredge/alluvium under existing waste to gain strength within a reasonable time frame. As the dredge/alluvium consolidates under additional load, the shear strength of the foundation will increase as excess pore-pressure dissipates. While a rapid consolidation is desirable because the shear strength is available early on, the magnitude and rate of slope movement must be controlled to ensure stability of the system at all stages.

A Geotechnical Monitoring Plan (GMP) [Geosyntec, 2003] for CIL expansion project was included as part of the PMA. Following the guidelines presented in the 2003 GMP, geotechnical monitoring data was obtained at the CIL site during MSE berm construction. Geotechnical monitoring data included vertical settlements obtained from

sensors and plates, piezometric heads collected from vibrating wire and stand-pipe piezometers, horizontal displacements obtained from conventional inclinometers and shape accelerometer arrays (SAAs), and in-situ shear strength data derived from various in-situ tests (e.g., cone penetrometer tests [CPTs]). Based on the data collected from above instruments during MSE berm construction, the constitutive model for the foundation soil was calibrated and the soil parameters were computed for slope stability and stress-strain finite element method (FEM) analyses. The FEM predictions were compared with actual site response during MSE berm construction, and demonstrated a good agreement between measured and predicted deformations and pore-pressure generation during MSE berm construction. However, because of the different loading conditions that the foundation soils at CIL will be subjected to during waste placement, to interpret the geotechnical instrument data collected after completion of the MSE berm construction, an updated GMP is required. The updated GMP incorporates the lessons learned during the MSE berm construction and will provide "early warning" criteria regarding slope movement for different waste filling stages and present information on the "long-term" behavior of the foundation performance.

The "early warning" would help detect the initiation of potential slope movement during waste placement activities that will take place following the completion of the MSE berm construction project. Because the foundation soils (i.e., dredge/alluvium) at the CIL site are extremely soft, slope instability can occur if waste is placed either excessively (i.e., higher or steeper than those shown in the permit drawings) or too rapidly. Fortunately, an adequate field instrumentation and monitoring program can provide evidence of potential foundation instability on the dredge/alluvium during waste placement. Hence, the GMP is expected to provide enough information to verify: (i) drained conditions of the dredge/alluvium in the PVD area (i.e., under the MSE berm area) during waste placement; and (ii) the adequate strength gain with time of the dredge/alluvium without PVDs (i.e., under the existing waste footprint).

The purpose of this GMP is to (i) identify the parameters that are required to adequately monitor CIL during the next site development stage; (ii) provide the general procedures and requirements associated with instrumentation monitoring, reporting, maintenance and repair; and (iii) outline the guidelines for performing in-situ shear strength tests.

2. DESCRIPTION OF INSTRUMENTATION

2.1 General

To verify that the waste/MSE berm system is stable and has an adequate factor of safety, the following parameters need to be monitored at the CIL site: (i) pore pressures at selected locations in the dredge/alluvium under the waste footprint and the MSE berm area; (ii) lateral subsurface movement of the dredge/alluvium at the toe of the MSE berm; (iii) vertical settlement of the dredge/alluvium in the MSE berm and waste placement areas; and (iv) the strength of the dredge/alluvium at selected locations. The frequency of monitoring is discussed in Section 4.

The vast majority of waste accepted at CIL is placed in Phases III, IV, and V, which are considered "active" landfilling areas and therefore, are the focus of the present GMP. Phases I and II receive only a small amount of asbestos and yard waste, which are stockpiled in this area. Phases I and II are considered "inactive" landfilling areas. Attachment A includes plan views of the geotechnical instrument locations installed at CIL.

Phases I and II are being monitored by conventional inclinometers, stand-pipe piezometers and settlement plates. In Phases III, IV and V geotechnical monitoring instruments are concentrated along seventeen selected monitoring lines (MLs). Each monitoring line is composed of an array of instruments consisting of an inclinometer (or SAA) at the toe of the MSE berm, three to four clusters of vibrating wire settlement sensors (one per cluster) and piezometers (one to three at various depths per cluster). Table 1 presents the nomenclature used for labeling these instruments; the prominent features for each instrument are described in detail in the following sub-sections.

2.2 Pore Pressure Measuring Devices

Stand-pipe piezometers are currently being used at Phases I and II of the CIL site to measure the piezometric water levels. Each stand-pipe piezometer consists of a observation well where ground water level readings are recorded by using a water level indicator. Vibrating-wire piezometers are currently being used at Phases III, IV and V of the CIL site for monitoring the excess pore pressures because of their capability to provide fast response to changes in pore pressure in the low permeable dredge/alluvium. A vibrating-wire piezometer consists of a tensioned wire attached to a metallic

diaphragm that deflects as a result of change in pore water pressure. This deflection changes the wire tension, and the magnitude of the pore pressure is correlated to this deflection. This pressure sensing device was recommended for monitoring excess pore pressure at in the dredge/alluvium layer because: (i) it minimizes hydrodynamic time lag (i.e., time required for water to flow into or out of a conventional piezometer); (ii) it is easy to read; and (iii) it does not interfere with site activities (e.g., waste placement). Minimizing hydraulic lag is important to accurately assess the effect of loading on pore pressure generation. A narrative of piezometer installation details is presented in Attachment B.

2.3 Horizontal Displacement Measuring Devices

To evaluate the pattern of horizontal displacement within the dredge/alluvium and the development of slip failures, inclinometers and SAAs, capable of providing continuous reading with depth, were installed at the site. Inclinometers are devices for monitoring horizontal displacements along two transversal vertical planes. The major components of an inclinometer are: (i) a casing with grooves for controlling orientation of the probe; (ii) a probe; (iii) a portable read-out unit; and (iv) a cable that links the probe to the read-out unit. Casings are installed in boreholes following a site-specific procedure. A probe is lowered and raised within the internally grooved casing and measures the pipe inclination with respect to the vertical. To minimize potential problems due to large horizontal deformations at the CIL site, inclinometers consisted of vertical, 3.5-in. diameter, machine-grooved, acrylonitrile/butadiene/styrene (ABS), plastic casings grouted in a borehole. The plastic casings were grouted in a borehole that was drilled into the Columbia Formation to act as a reference point which had no displacement. A description of inclinometer installation details is provided in Attachment B.

SAA is used for measuring horizontal ground deformations at locations where existing inclinometers became non-operational due to buckling during the course of geotechnical monitoring. An SAA is composed of an array of 2-ft long rigid segments connected by joints. On each joint, sensors are installed to measure the tilt along three axes. SAA output provides the deflected shape of the bore hole, which can be compared to previous readings to determine magnitude and direction of relative horizontal movement.

2.4 Vertical Deformation Measurement Devices

Settlement plates, monitored by surveying measurements, are currently being used to measure the vertical deformations at Phases I and II of the CIL. In Phases III, IV, and V the dredge/alluvium settlements are being monitored by vibrating wire settlement sensors. As the soil settles, a vibrating wire settlement sensor measures the change of liquid pressure between the sensor and a reservoir. For the CIL site, this settlement was correlated to measure the consolidation of the dredge/alluvium.

3. MONITORING CRITERIA

3.1 Introduction

Because almost all waste received at the CIL is placed in Phases III through V, monitoring criteria presented in this Section applies to these Phases. At present, filling in Phases I and II is very limited and therefore loading is minimal. For this reason, Phases I and II are considered "inactive" landfilling areas and are being monitored by conventional inclinometers, stand-pipe piezometers, and settlement plates on a quarterly basis. If filling rates are to increase in Phases I and II or if the response from the instruments installed in the "inactive" landfilling areas show significant variations while this plan is in effect, monitoring criteria for this area shall be reevaluated by a geotechnical engineer.

The challenges related to placement of waste after MSE berm construction over dredge/alluvium in Phases III through V at the CIL site are similar to other projects in which loads are rapidly erected over soft soils. A review of monitoring practices used in the construction and loading of embankments on soft clays is presented in this section to evaluate the performance of foundation materials and identify critical parameters to be monitored during these conditions. Information from this review along with the experience acquired at the site during the MSE berm construction, were used to establish a framework for updating the 2003 GMP for the site. As additional monitoring information from waste placement is obtained, the monitoring frequency proposed in this GMP may be further modified in the future to incorporate the lessons learned from this loading condition.

In Phases III through V at the CIL site, particularly when placing waste in the valley behind the MSE berm, waste placement will generate excess pore pressures on the dredge/alluvium layer, similar to the rapid MSE berm construction. In this section, monitoring procedures to verify the local stability of the MSE berm and the overall site stability during waste placement are presented.

During waste placement behind the MSE berm (i.e., waste placement up to elevation 90-ft-msl in the valley area), the factor of safety against failure obtained from limit equilibrium analysis shall be maintained at or above 1.3 for short-term condition (i.e., immediately following waste placement), and at or above 1.5 for long-term condition

(i.e., after pore pressure increases due to waste placement are dissipated). A factor of safety against failure, obtained from limit equilibrium analysis, shall be equal to or greater than 1.5 for waste filling activities outside the valley area and/or above elevation 90 ft-msl.

3.2 Monitoring Method

The principles underlying the monitoring and instrumentation of embankments on soft soil foundations rely on the so-called "observational method" [Peck, 1969] that set a rational basis for geotechnical monitoring. The observational method is a formal procedure that consists of the following steps:

a. subsurface exploration sufficient to establish general nature, pattern, and properties of deposits;
b. assessment of the most probable conditions, and the most unfavorable conceivable deviation from these conditions;
c. establishment of design based on a working hypothesis of behavior anticipating most probable conditions;
d. selections of quantities to be observed as construction proceeds and calculation of their anticipated values under the working hypothesis;
e. calculation of values of the same quantities under the most unfavorable conditions compatible with the available data;
f. selection in advance of a course of action or modification of the design for every foreseeable significant deviation of the observational findings from those predicted on the basis of the working hypothesis;
g. measurement of quantities to be observed and evaluation of actual conditions; and
h. modification of design to suit the conditions.

3.3 Monitoring Criteria for MSE Berm Stability

3.3.1 Introduction

MSE berm construction was concluded in June 2010 but, based on the waste filling plans, some sections of the landfill will receive waste (i.e., loading) more than two years after the end of berm construction. Therefore, monitoring of the MSE berm stability needs to continue to occur in parallel with the overall landfill stability during waste placement in other sections of the landfill. Monitoring criteria for areas receiving waste is discussed in Section 3.4.

3.3.1 Monitoring of the MSE berm

Because no additional loading is expected to take place in certain sections before waste placement commences, monitoring of the MSE berm stability will be conducted following a similar procedure as the one presented in the 2003 GMP. The instruments located in vicinity of MSE berm will be monitored to obtain pore pressures, settlement, and horizontal displacement and the data obtained will be compared to FEM analysis results. If necessary, constitutive model's parameters will be updated, and FEM analysis will be performed to evaluate MSE berm stability. Displacements will continue to be correlated with factors of safety against slope instability. The FEM analysis involves using the c/ϕ reduction method (an iterative process to reduce the Mohr-Coulomb parameters by a given factor) to determine the rate of displacement for the MSE berm during waste placement and the critical factor of safety[1] against failure. The following parameters will be required to evaluate the MSE berm stability prior to waste placement in the vicinity of the MSE berm:

- *Vertical deformations at the center of the MSE berm*: Vertical deformations (with settlement sensors) will be measured periodically and compared with the expected amount of vertical deformations due to radial consolidation.

[1] Factors of safety calculated by the c/ϕ reduction method was found to be lower than those calculated from limit equilibrium method, which is consistent with the results reported by other authors [e.g., Racansky et al., 2006]. The latter procedure is typically used to analyze slope stability. To be consistent with the historical data at the site and the standard of practice, after the rate placement is estimated, the factors of safety are recalculated using limit equilibrium methods.

This comparison can provide an indication of the degree of consolidation of the dredge/alluvium in the PVD zone. During the period that no additional loading will be exerted on the MSE berm backslope, settlement under the MSE berm is expected to be significantly small.

- *Horizontal displacements measured at the toe of the MSE berm*: Prior to waste placement, lateral deformations at the toe of the MSE berm (measured with inclinometers and SAAs) should continue to be less than the measured vertical deformations. The ratio between settlement and horizontal displacement is expected to be significantly lower from what was predicted and measured during MSE berm construction.
- *Pore pressures measured at the center of the MSE berm*: Pore pressure measurements (with vibrating wire piezometers) will provide direct information of the degree of consolidation of the underlying dredge/alluvium and, indirectly, whether local yielding is taking place (i.e., pore pressure due to shear stresses being generated). Because no loads are expected to be exerted on the MSE berm before waste placement starts, it is expected that pore pressures will continue to decrease during this phase.

As no loads (i.e., waste placement) will be placed at certain sections around the MSE berm for some time after the completion of the MSE berm, decreasing pore pressures, settlements and horizontal displacements rates are expected at these sections. If field data presents a trend different than the historic data and/or FEM predictions, the geotechnical engineer shall define a revised monitoring frequency and conduct appropriate numerical analysis (e.g., FEM, slope stability analyses) to evaluate MSE berm localized stability.

3.4 Monitoring Criteria for Waste Placement

3.4.1 Introduction

The fill placement for MSE berm construction at the CIL site was finalized in June 2010. Following the completion of the berm, the foundation material (i.e., dredge/alluvium layer) will be subjected to loading from waste placement mostly in areas not underlain by PVDs. Unlike conventional landfills, in which waste is placed in one active cell at any given time until it is filled before moving to a new cell, the

filling at CIL will take place concurrently in various portions of the site. This distribution of waste load over a relatively large area will allow time for pore pressures to dissipate hence, subsequently lowering the potential for slope movement. To this end, the site contractor will be required to follow specific waste placement filling plans prepared by the design engineer. These filling plans will likely need to be updated periodically and will be aimed at providing DSWA with three to four years of disposal capacity at a time. The filling plans should include a rate of waste placement. Modifications to the filling plans (either to the rate placement or to the sequence of landfilling) will require the approval of a qualified geotechnical engineer.

Waste placement is anticipated to take place, in two main stages: (i) Stage 1: waste placement to elevation 70 ft-msl along the valley formed between the MSE berm backslope and existing waste on the south side of CIL; (ii) Stage 2: waste placement abutting against the inner crest of the MSE berm at elevation 90 ft-msl extending to elevation 100 ft-msl on a 3-horizontal to 1-vertical (3H:1V) slope, and to elevation 110 ft-msl at a flatter, variable slope. For a given area, the sequence of waste placement for each loading stage will lead to different pressure distributions. Therefore, the stability of the landfill will be monitored by different criteria for each loading stage, which are discussed below.

3.4.2 First Waste Placement Stage – Stage 1

For a given area, the excess pore pressure (Δu) generated during initial waste placement (i.e., waste placement to elevation 70 ft-msl) is expected to be less than the increment of vertical stress imposed by the embankment construction. Excess pore pressure (Δu) in the filling area will be monitored by piezometers under the MSE berm located in Cluster 1.

FEM analyses conducted to simulate the site pore pressure response during the first stage of waste placement indicate that the pore pressure increase at Cluster 1 would be a fraction of the pore pressure observed directly under the loading area. Results of FEM analyses estimate the pore pressure increase under the MSE berm during the first loading stage to be less than 250 psf (i.e., 4 ft of water). To verify the stability of CIL during the first waste placement stage, slope stability analyses will be performed under conservative assumptions. For these computations, the pore water pressure increase directly under the waste placement area was conservatively assumed to be equal to the

weight of waste placed above it. Based on the analyses described in the previous paragraph, the factor of safety during first waste placement stage will be 1.3 for short-term condition, and equal to or greater than 1.5 for long-term condition, as long as the pore water pressures recorded at Cluster 1 piezometers are not greater than the peak values recorded during the placement of MSE berm soil lifts.

3.4.3 Second Waste Placement Stage – Stage 2

During the second waste placement stage, waste will be placed abutting against the inner crest of the MSE berm at elevation 90 ft-msl and will extend to elevation 100 ft-msl on a 3H:1V slope, and from there in a flatter, variable slope, to elevation 110 ft-msl To evaluate the performance for the second stage of waste placement, a semi-empirical procedure for monitoring the stability of constructing earth embankments over soft foundations developed by Matsuo and Kawamura [1977][2] is proposed to evaluate the stability during waste placement. The empirical procedure consists of measuring the maximum settlement measured at the centerline of an embankment (s) and the maximum horizontal (i.e., outward from the embankment) subsurface movement measured below the toe of the embankment (δ_m), and its variation during loading. At the CIL, waste placement activities can be regarded as constructing an embankment over soft soils with the crest of the waste slope as the top of the embankment and the toe of the waste wedge as the toe of the embankment.

For this stage, horizontal displacements of the dredge/alluvium at the toe of the MSE berm was calculated to be of similar magnitude as the ones calculated at the toe of the waste[3], hence the inclinometers (or SAAs) data can be used as a proxy for the horizontal displacements of the dredge/alluvium that would be measured at the toe of the waste. Thus, s and δ_m correspond respectively to the settlement measured at Cluster 2 settlement sensors and the maximum horizontal displacement at the toe of the MSE berm measured by inclinometers (or SAAs), respectively.

---

[2] Matsuo and Kawamura [1977] compiled information from the construction of tens of earth embankments and presented the information on δ_m/s vs. s plots. They showed that there is a stable boundary within which construction over soft soils can be performed safely. A similar approach was implemented for the waste placement stage.

[3] This indicates that the dredge/alluvium under the MSE berm will basically move as a rigid body.

FEM analyses were conducted to develop site-specific δ_m/s vs. s plots similar to those developed by Matsuo and Kawamura [1977]. Three representative cross sections in Phases III, IV, and V were analyzed. For these analyses, different waste placement rates were assumed and the corresponding factors of safety at different waste placement stages were defined. In the calculations performed, δ_m and s were reset to zero at the beginning of waste placement stage to exclude deformations observed during MSE berm construction. The analyses show that initially the deformation ratio δ_m/s is generally high, and starts to decrease rapidly after the waste reaches a critical height.

The δ_m/s ratio on the critical boundary for the second waste placement stage varies between 0.8 and 1.1. This ratio will be used to trigger a closer evaluation of the conditions during waste placement. Thus, if the results of field monitoring data indicate that this critical boundary is reached, FEM analyses will be conducted to evaluate the stability of the landfill and whether especial provisions are needed.

During Stage 2 of waste placement, the factor of safety against failure obtained from limit equilibrium analysis shall be equal to or greater than 1.3 for short-term condition and equal to or greater than 1.5 for long-term condition, for the condition in which waste is placed in the valley area, up to elevation 90-ft-msl. A factor of safety against failure equal to or greater than 1.5 shall be maintained during waste placements in areas away from the back slope of the MSE berm and/or waste placement above 90 ft-msl.

3.4.4 Future Waste Placement

Because waste placement activities depend upon the existing site conditions at the time of waste placement, past displacements, and foundation shear strength gains, future waste filling plans will be prepared when the airspace available from the previous filling plan is reaching capacity. At that time, the geotechnical engineer will: (i) update waste filling plans; (ii) evaluate whether or not a field investigation is needed to update the foundation shear strength; and (iii) develop a new monitoring procedure consistent with the proposed filling plans. Depending on the results of the analysis, modifications to the monitoring procedure described in the next section may be required. Because these activities may lead to modifications of the GMP, review and approval by Delaware Department of Natural Resources and Environmental Control (DNREC) will be required and should be considered during planning stages of the next filling plan design.

3.5 Criteria for In-situ Shear Strength Assessment

In addition to periodical monitoring of lateral displacements, vertical deformations, and excess pore pressures, direct measurement of shear strength of the foundation shall be performed either via field or laboratory procedures to help evaluate stability of the landfill.

As discussed in Section 3.4, during the preparation of the next filling plans, the need for updating shear strength parameters of the dredge/alluvium layer will be assessed by the geotechnical engineer. If field updated shear strength data is deemed necessary, the geotechnical engineer will recommend the number and location of in-situ shear strength tests based on the stage of waste filling, analysis of data collected from existing instruments and previous in-situ shear strength test results, and numerical analyses (i.e., FEM and slope stability). This will help in assessing the overall site stability of the landfilling sequence. Cone penetration tests (CPTs) will likely be selected to measure shear strength of the dredge alluvium, but other methods to assess in-situ shear strength may be used in lieu of CPTs if deemed appropriate by the geotechnical engineer. DNREC shall be notified of the location, timing, and methods proposed by the geotechnical engineer at least two weeks prior to in-situ shear strength data collection.

4. MONITORING FREQUENCY AND REPORTING

4.1 Introduction

Geotechnical data shall be collected in accordance with this GMP. Data to be collected includes pore pressures, vertical and horizontal displacements, shear strength, and topographic information for the site. The data shall be stored electronically and interpreted by a qualified geotechnical engineer. A graphical representation of the inclinometer/SAA data, piezometer data, settlement data, and topographical data shall be created. Results shall be reviewed by a geotechnical engineer to verify that pore pressure changes, deflections, and settlements are within expected ranges. Plots of vertical and horizontal displacements, and pore pressures will be presented in a format as detailed in Section 4.3. The performance monitoring devices shall be evaluated periodically to ensure that they are working properly.

4.2 Monitoring Frequency

4.2.1 MSE Berm

Geotechnical monitoring data from all monitoring lines and instruments will be collected on a quarterly basis. Geotechnical instruments located along the landfill sections that are being loaded (i.e. receiving waste) will be monitored more frequently (see Table 2). Data will be analyzed and settlement, horizontal displacements, and pore pressures will be compared to the historic trend following MSE berm construction and to FEM analyses predictions.

4.2.2 Waste Placement

The monitoring frequencies for a given waste placement area are presented in Table 2 and should be closely followed. These frequencies were developed based on the following factors:

- waste placement around the MSE berm area;
- levels of measured vertical settlement, lateral displacement, and piezometric heads; and
- time elapsed since the last waste placement occurred in a given area.

However, changes in operational activities may lead to the need of increasing the monitoring frequency of those instruments close to the waste placement activities. A qualified geotechnical engineer should evaluate any changes to the operations of the landfill and any necessary increase of monitoring frequency (particularly if the waste rate increases significantly).

4.2.3 Modification of Monitoring Frequency

Assessment and adjustment of monitoring frequencies shall be performed by the geotechnical engineer due to changes in operations activities. This reassessment of monitoring frequency shall be performed by a geotechnical engineer in light of historical data and current horizontal deformation, pore pressure, and vertical displacement rates associated with the rate of waste placement. Also, a reassessment of the monitoring frequencies of the settlement sensors may be proposed in the future by the geotechnical engineer if more data regarding excess pore pressure are obtained.

4.3 Recommended Graphical Representation of Monitored Data

This section presents recommendations for the use of different graphical representations of the monitored data depending upon the particular problem to facilitate the interpretation. Measured data should be presented as discussed below.

Plot 1. Profiles of horizontal displacement (measured with inclinometers/SAA's) at different times. This will help to measure the maximum horizontal displacement (δ_m) and detection of potential weaker zones in the soft foundation during waste placement. Potential weak zones are typically located near the area where the maximum horizontal displacement takes place.

Plot 2. Maximum horizontal displacement (δ_m) versus time. This plot can be used to evaluate the ratio of increment of horizontal displacement ($\Delta\delta_m$) for a given time Δt ($\Delta\delta_m/\Delta t$). This ratio should gradually decrease with time for constant load conditions indicating that vertical displacements are controlled by consolidation. An increasing rate may imply excessive undrained shear deformations and will require further investigation to provide appropriate recommendations.

Plot 3. Vertical displacement (s) versus time. This information can be used to evaluate the site-wide settlement that has taken place due to waste placement.

Plot 4. Excess pore pressure (Δu) versus time. This plot can be used to evaluate the piezometric heads and determine the direction of flow due to increase in pressure exerted due to waste placement as function of time.

Plot 5. Plots of deformation ratio (δ_m/s) as a function of vertical displacement to compare with failure boundary criteria established for the site.

Plot 6. Normalized excess pore pressure ($\Delta u/\gamma_{fill}\ H$) versus waste height ($H$). This plot is useful as piezometric heads can be used to evaluate the amount of pore pressure that has been exerted due to waste placement.

The interpretation of field deformation data to provide early warning indication of foundation instability requires considerable judgment. The creation of these plots, as well as interpretation of the results, should be conducted by knowledgeable geotechnical engineers. The information provided in this GMP as well as in the references shall be studied by the geotechnical engineer prior to performing the monitoring activities at the CIL site.

4.4 Reporting

Monitoring summary reports shall be prepared by the geotechnical engineer and provided to DSWA on a quarterly basis. The report shall describe current and previous trends for horizontal and vertical displacements and pore pressures monitored during the active life of the CIL and shall provide a summary describing the most recent monitoring results. The original reports shall be kept on file. An outline of the monitoring report is presented in Attachment C.

5. RESPONSE ACTIONS

Should horizontal displacement, settlement, or pore pressures exceed established criteria as set in Table 3, the steps outlined below shall be followed.

- Step 1. Ensure that all monitoring equipment is working properly.
- Step 2. Verify if available information on the elevations of survey monuments exceed acceptable magnitudes and rates of settlement.
- Step 3. A close evaluation of the nest of piezometers at the specific monitoring section and possibly adjacent sections, may be required to determine if the vertical deformation is due to consolidation or due to shearing of the soil.
- Step 4. Confirm additional deflection, as well as increased pore pressures surpassing established criteria, may necessitate the temporary suspension of waste placement or relocation of waste placement areas, in order to allow the underlying soils to consolidate and gain strength. Should movement continue after landfilling has ceased, waste excavation and/or construction of a compacted berm adjacent to the exterior toe of the MSE berm may be needed. Regardless, the solution will be executed with concurrence of DSWA, DNREC, and geotechnical engineer.
- Step 5. Evaluate if the installation of additional instruments may be necessary, if data collected from the existing instruments is determined to be questionable due to defective equipment or installation procedures.

6. INSTRUMENTATION REPAIR AND REPLACEMENT

6.1 General Procedures

One of the activities of monitoring the instruments at the CIL site shall involve ensuring their proper working and functionality during waste placement. In case of instrument malfunction, observed during data analysis or by visual inspection, notification will be made to DNREC within five days of when the malfunction is observed. The geotechnical engineer shall provide recommendations regarding instrument repair, replacement, or decommissioning. The geotechnical engineer and DSWA shall discuss possible actions prior to repair, decommissioning, replacing, or relocating any geotechnical instrumentation. Communication presenting possible corrective actions to malfunctioning instruments will be submitted to DNREC within 15 days after malfunction of an instrument is identified. No instrument shall be decommissioned or abandoned without prior approval from DNREC. The following sections address the procedures to be followed by the geotechnical engineer regarding existing and future malfunctioning instruments.

6.2 Malfunctioning Instruments

Inclinometers/SAA: Vertical inclinometer casing(s) that are damaged (e.g., excessive deflection or collision with vehicle) or separates and develops gaps between adjacent casing pieces due to frost heave, will be repaired with a splint as described in the procedure outlined in Attachment D and inspected. If only the upper portion of ABS pipe is damaged, the installation of a new inclinometer is not necessary.

If a new inclinometer is necessary, the new inclinometer shall be preferably located within 20 ft of the existing one. Installation of the new inclinometer shall follow the installation guide presented in Attachment B. Alternatively, the geotechnical engineer may recommend the installation of a SAA. If an existing SAA becomes non-functional, the geotechnical engineer may decide to replace it with another SAA or conventional inclinometer.

VW/Stand Pipe Piezometers: If Cluster 1 vibrating wire piezometers malfunction, an investigation to determine the cause should be conducted immediately; if attempts to restore its functionality fail, these instruments should be replaced shortly thereafter. Alternative locations for the replacement instrument may be proposed by the geotechnical engineer. The need for replacement of malfunctioning vibrating wire piezometers in Clusters 2-4 will be evaluated by the geotechnical engineer depending on field conditions, stage of waste filling, operational status of surrounding vibrating wire piezometers, and stability analysis of the landfill for existing conditions and future waste placement scenarios.

Seasonal variations of measured temperatures in VW piezometers at CIL are low and, therefore, have little or no impact on the calculations of piezometric heads. Hence, in case a VW piezometer provides an adequate electrical signal for piezometric head but not for temperature, an average value for temperature will be used and the instrument will be considered operational.

If standpipe piezometers malfunction, the need for replacement of these instruments will be evaluated by the geotechnical engineer depending on field conditions, operational status of surrounding piezometers, and stability analysis of the landfill for existing and future conditions.

Settlement Sensors/Plates: Any malfunction in Cluster 1 vibrating wire settlement sensors will require an investigation to determine the cause of failure; if attempts to restore its functionality fail, these instruments should be replaced by a settlement sensor at the toe of the slope or, alternatively, by a surveying monument or settlement plate shortly thereafter. Alternative locations for the surveying monument may be proposed by the geotechnical engineer. Replacement of malfunctioning vibrating wire settlement sensors in Clusters 2-3 will be decided by the geotechnical engineer depending on field conditions, stage of waste filling, operation of surrounding vibrating wire settlement sensors, and stability analysis of the landfill for existing conditions and future waste placement scenarios.

Seasonal variations of measured temperatures in VW settlement sensors at CIL are low and, therefore, have little or no impact on the calculations of settlement. Hence, in case a VW settlement sensor provides an adequate electrical signal for settlement but not for

temperature, an average temperature value will be used and the instrument will be considered operational.

If a settlement plate is damaged, replacement or repair of this instrument will be evaluated by the geotechnical engineer based on field conditions, operational status of surrounding piezometers, and stability analysis of the landfill for existing and future conditions.

7. REFERENCES

Geosyntec (2003). *Geotechnical Monitor Plan for Cherry Island Landfill Expansion Project*, dated September 2003.

Matsuo, M., and Kawamura, K., (1977). *Diagram for Construction Control for Embankment on Soft Ground*, Soils and Foundations, Vol. 17, No. 3, pp. 37-52.

Peck, R.B. (1969). *Advantages and Limitations of the Observational Method in Applied Soil Mechanics*, Geotéchnique, Vol. 19, No. 2, pp. 171-187.

Racansky, V., Thurner R. and Kummerer, C. (2006). *Design of a deep building pit with numerical and limit equilibrium methods*, Numerical Methods in Geotechnical Engineering, Edited by Schweiger, H.F., Taylor & Francis Group, London, 2006.

Rowe, J.K., and Mylleville, B.L.J., (1990). *Implication of adopting an allowable geosynthetic strain in estimating stability*. Geotextile, geomembranes and related products, Den Hoedt (Editor), Balkena, Rotterdam.

TABLES

TABLE 1

INSTRUMENTATION NOMENCLATURE

Phase	Phase ID	Instrument ID(1)	Section ID(2)	Horizontal Location ID(3) (Clusters)	Vertical Location ID(4)
III	P3	IC, PZ, SS, SAA	12 – 17	1 – 3	A, B, C (applicable only for piezometers)
IV	P4		10 and 11		
V	P5		1 – 9		

Notes:

(1) IC = inclinometer;
PZ = piezometer;
SP = settlement plate; and
SAA =shape accelerometer array.

(2) See plan locations in Attachment A.

(3) The horizontal location ID starts from the berm towards the landfill.

(4) Piezometers are installed at the same horizontal coordinates and at various depths:

A = top;
B = middle; and
C = bottom.

Nomenclature used in identifying an instrument contains up to five parts: (a) phase ID; (b) instrument ID; (c) monitoring section ID (1 through 17); (d) horizontal location ID (1, 2, or 3); and (e) vertical location ID (A, B, or C only applicable for piezometers).

For example, a piezometer installed under the MSE berm in Phase V, at the top of the dredge layer, on Monitoring Section 8, is referred to as P5-PZ-08-1A.

.

TABLE 2

GEOTECHNICAL MONITORING FREQUENCY DURING WASTE PLACEMENT

Landfilling within 200 ft behind crest of MSE Berm			**Landfilling more than 200 ft behind crest of MSE Berm**	
Instruments under MSE Berm		**Instruments outside MSE Berm (3)**	**Instruments under MSE Berm**	**Instruments outside MSE Berm (3)**
Excess Pore Pressure, ft (1)				
> 12	**12 - 0 (2)**			
Multiple (1)	W (First Month) M (Next two months) Q (If no changes in previous quarterly data)	Q (If no significant changes in previous quarterly data)	Q(3) (If no significant changes in previous quarterly data)	Q (If no changes in previous quarterly data)

Notes:

(1) More frequent reading may be required if the magnitude and/or rate of displacements are deemed excessive. The frequency of readings will be decided by the geotechnical engineer based on current field conditions.

(2) W = at least once every week, M = at least once every month, Q = at least once every three months. All instruments shall be monitored at least once every three months.

(3) Monthly (or more frequent) readings may be required if magnitude of total displacement and/or rates of displacements are deemed excessive.

TABLE 3

EXCEEDANCE CRITERIA DURING WASTE PLACEMENT

Parameter	Description
δ_m/s vs. s	Verify that deformation ratio vs. settlement is lower than 0.8 (1).
δ_m vs. time	Evaluate time rate of δ_m variations.
Excess Pore Pressure under MSE berm	Reduce waste placement rate in the vicinity of the monitored section if excess pore pressure is larger than 12 ft.
Shear Strength	Evaluate the shear strength in dredge and perform analysis for existing conditions following geotechnical engineer recommendations.

Notes: (1) During second waste placement stage, failure boundary may be redefined depending upon soil response during waste placement.

ATTACHMENT A

GEOTECHNICAL INSTRUMENT LOCATION

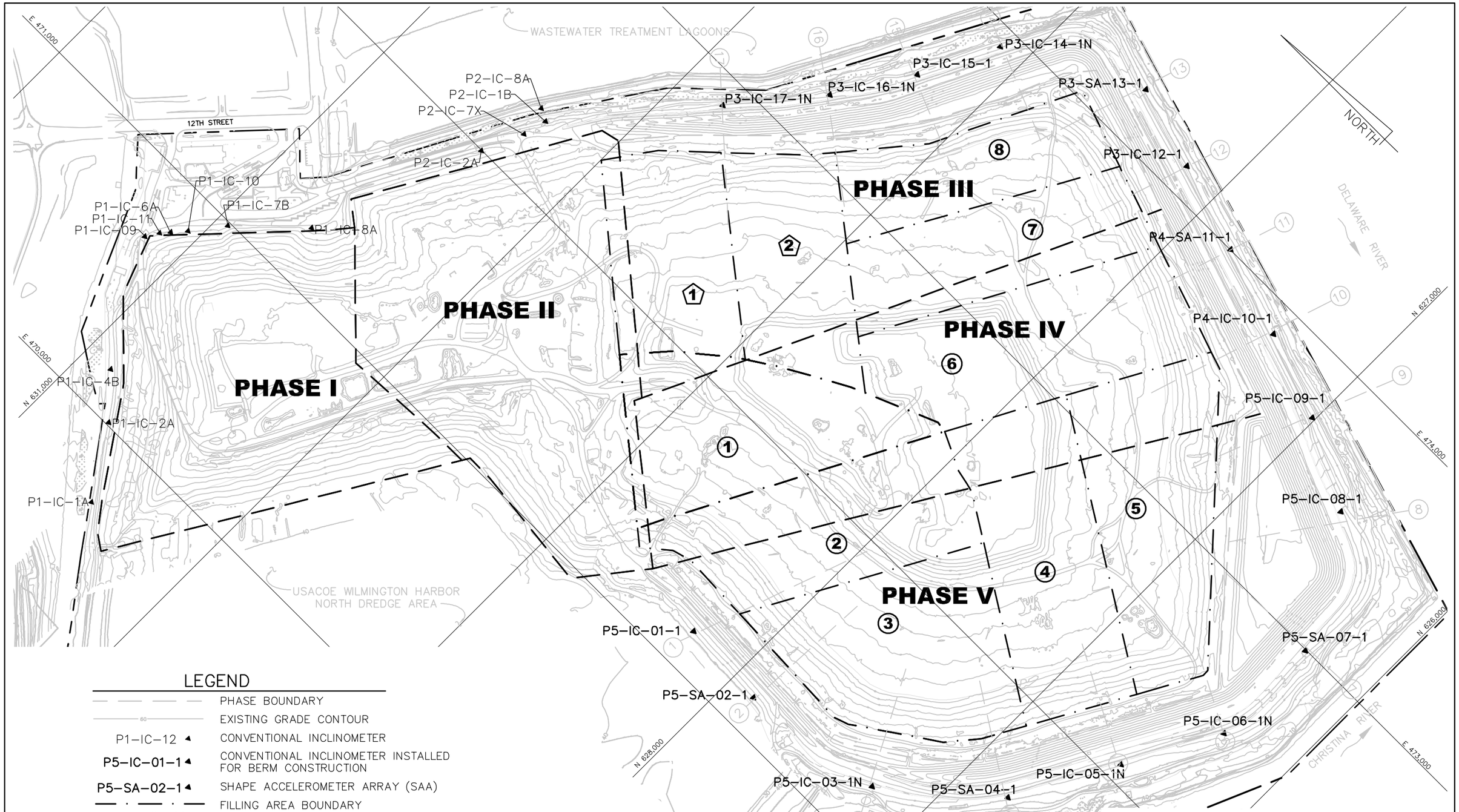

LEGEND

	PHASE BOUNDARY
60	EXISTING GRADE CONTOUR
P1-IC-12 ◄	CONVENTIONAL INCLINOMETER
P5-IC-01-1 ◄	CONVENTIONAL INCLINOMETER INSTALLED FOR BERM CONSTRUCTION
P5-SA-02-1 ◄	SHAPE ACCELEROMETER ARRAY (SAA)
	FILLING AREA BOUNDARY
2 6	FILLING AREA
16	MONITORING LINE

NOTES:

1. EXISTING CONDITIONS SITE PLAN IS FROM AN ELECTRONIC FILE OF SURVEY BY FORESITE ASSOCIATES, INC., DATED 3 APRIL 2011.

400 200 0 400
SCALE IN FEET

INCLINOMETER LOCATION PLAN

Geosyntec consultants
COLUMBIA, MARYLAND

DATE:	JUNE 2011
PROJECT NO.	ME0567
DOCUMENT NO.	MD11235
FILE NO.	0380F208R12
FIGURE NO.	4

F:\cadd\Cherry Island\C567 - CIL Quarterly\0380F208r12.DWG, 4-inclin, 6/24/2011 2:52:15 PM, geosyntec consultants, inc (jcc)

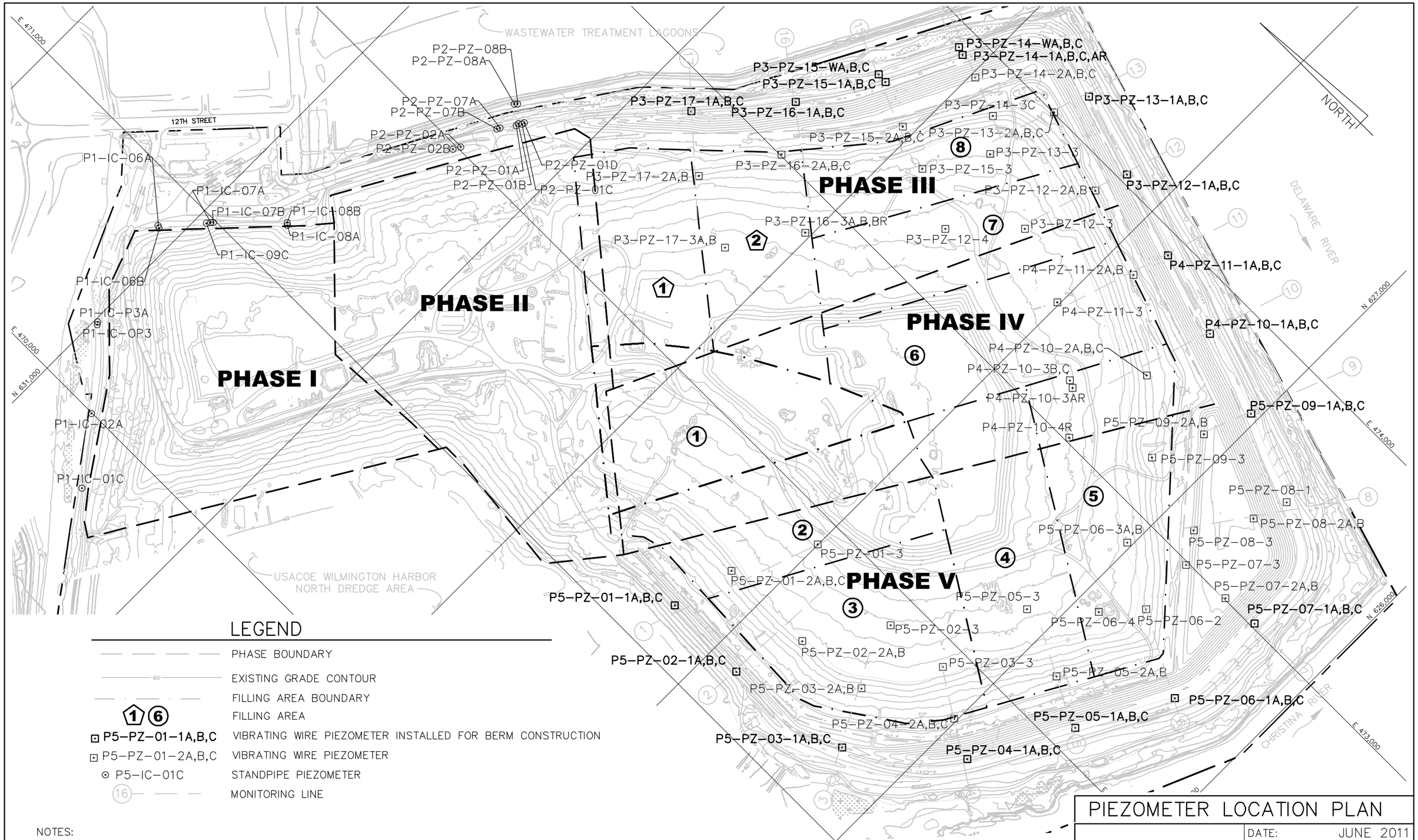

LEGEND

— — — —	PHASE BOUNDARY
60	EXISTING GRADE CONTOUR
— · — · —	FILLING AREA BOUNDARY
1 6	FILLING AREA
P5-PZ-01-1A,B,C	VIBRATING WIRE PIEZOMETER INSTALLED FOR BERM CONSTRUCTION
P5-PZ-01-2A,B,C	VIBRATING WIRE PIEZOMETER
P5-IC-01C	STANDPIPE PIEZOMETER
16 — — —	MONITORING LINE

NOTES:

1. EXISTING CONDITIONS SITE PLAN IS FROM AN ELECTRONIC FILE OF SURVEY BY FORESITE ASSOCIATES, INC., DATED 3 APRIL 2011.
2. PHASE I PIEZOMETERS HAVE BEEN LABELED AS "IC" SINCE INSTALLATION.

400 200 0 400
SCALE IN FEET

PIEZOMETER LOCATION PLAN

Geosyntec consultants
COLUMBIA, MARYLAND

DATE:	JUNE 2011
PROJECT NO.	ME0567
DOCUMENT NO.	MD11235
FILE NO.	0380F208R12
FIGURE NO.	5

P:\cadd\Cherry island\C567 - CIL Quarry\0380F208r12.DWG, 5-plcz, 6/24/2011 2:51:43 PM, geosyntec consultants, inc (jcc)

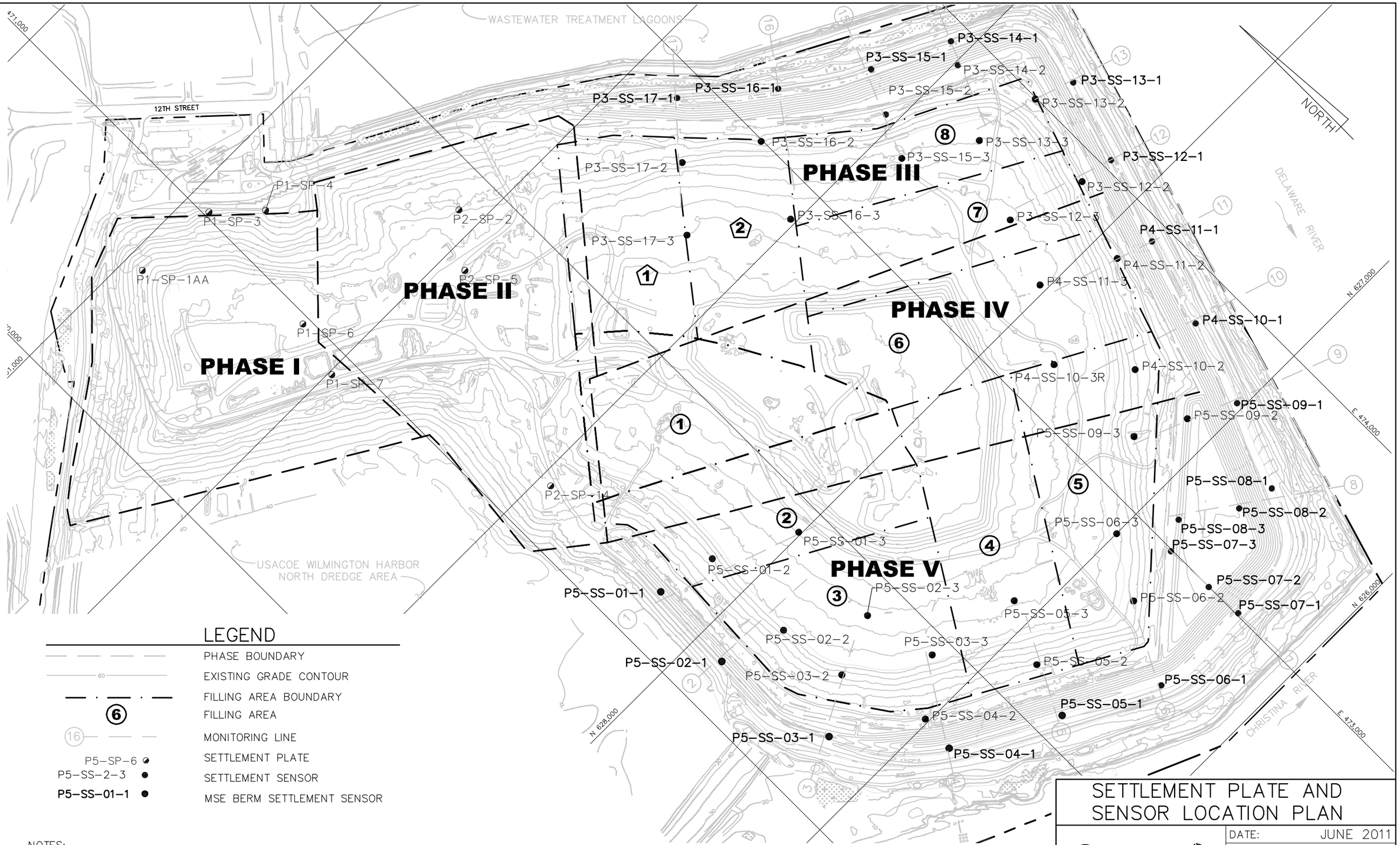

NOTES:

1. EXISTING CONDITIONS SITE PLAN IS FROM AN ELECTRONIC FILE OF SURVEY BY FORESITE ASSOCIATES, INC., DATED 3 APRIL 2011.

SETTLEMENT PLATE AND SENSOR LOCATION PLAN

Geosyntec consultants
COLUMBIA, MARYLAND

DATE:	JUNE 2011
PROJECT NO.	ME0567
DOCUMENT NO.	MD11235
FILE NO.	0380F208R12
FIGURE NO.	6

F:\cadd\Cherry island\ME567 - CIL Quarterly\0380F208r12.DWG, 6-sp, 6/24/2011 2:51:08 PM, geosyntec consultants, inc (cc)

ATTACHMENT B

INSTRUMENT INSTALLATION PROCEDURES

INCLINOMETERS

Standard Vertical Inclinometer Installation

Coupling Requirements

Care must always be taken to seal inclinometer couplings and bottom caps against intrusion of backfill. Couplings with O-Rings do not require additional sealing, but others usually require sealing mastic and tape. Where pop-rivets are intended to shear to allow telescoping movement, sealing mastic and tape should be used over the rivet heads. Even with rigid riveted couplings, the stem of the rivet occasionally pulls out during installation, and rivet heads should be filed smooth and sealed. Solvent cement is used on most rigid plastic couplings for sealing and tensile strength and usually one or more pop-rivets are installed on each side of the coupling to provide strength while the cement sets. When maximum tensile strength is required across cemented couplings in ABS or PVC casing, a primer should be used before the solvent cement is applied. Rivets should not be installed in casing grooves or any other location that would interfere with tracking of the probe.

When assembling couplings, one must be careful to avoid creating spiraled casing. Alternate couplings should be twisted left and right before fixing.

Borehole Requirements

At CIL, there is a risk of borehole collapse during installation, the borehole should be supported by drilling mud, drill casing, or hollow-stem augers. Drill casing or hollow-stem augers should be used if any doubt exists about the ability of drilling mud to support the borehole. Boreholes should be as near as possible to true vertical.

In general, the bottom of the inclinometer casing should be fixed from translation so that absolute deformation data can be calculated by assuming base fixity, and thus the borehole should be advanced to the Columbia Formation.

Installation in Boreholes

The following installation procedure is recommended for the remaining inclinometers.

- Bore a 6-inch hole minimum.
- Lower a 4-inch ID (about 4.5 to 4.75-inch OD) corrugated HDPE pipe. To facilitate installation, a bottom cap shall be used and water filled inside the corrugated pipe to weight it and keep the pipe straight during installation in the borehole.
- Using a tremie pipe, place neat Portland cement (PC) grout at the bottom of the 4-in. corrugated HDPE pipe. The amount of grout shall be approx. 1 gallon (i.e., approximately 1.5 ft inside the 4-in pipe).
- While the PC is wet, insert a greased inclinometer casing without a bottom cap inside the corrugated HDPE pipe. Press the casing into the neat PC grout and hold it in place until the grout is set. The inclinometer casing shall be 3.34-in inclinometer casing and the outside of the joints wrapped with duct tape and outside of casing greased.
- Grout the space between the borehole and the 4-in corrugated HDPE pipe using a weak grout.
- Poor liquid grout within the annulus between the 4 in. corrugated HDPE pipe and the 3.35 in. inclinometer casing.

PIEZOMETERS

Vibrating Wire Pressure Transducer Installation

Vibrating Wire Pressure Transducers (VWPTs) are installed in multi-level clusters of two to three units per boring. Each of the borings containing VWPT clusters are referred to as "wireline piezometers". Nomenclature used in identifying each wireline piezometer in the field notebook and on drawings is the abbreviation "PZ", followed by the monitoring section identifier (1 through 18), followed by the piezometer ID (1, 2, or 3) and the depth ID (A, B, or C). For example, the wireline piezometer installed under the MSE berm in Phase V, Monitoring Section 8, is referred to as P5-PZ-08-1A.

Installation of the wireline piezometers involves: (i) drilling one borehole; (ii) installation of each VWPT; and (iii) appropriate backfilling and/or sand-packing in the borehole. In general, a borehole with a minimum diameter of six inches is advanced to a specified depth, as determined by the project geologist and/or design engineer.

Based on experience at the site, when drilling in an area that contains no waste material, results obtained when using the most satisfactory mud-rotary drilling with a 6-in. tri-cone, or roller, bit (other 6-in. rotary bits are acceptable). Drilling fluid used in the advancement of each borehole must be guar-based material. Bentonite drilling fluids are not acceptable for this application due to its designed tendency to coat the walls of the boring with a gel-like form of bentonite. Guar-based fluids (e.g., Johnson Screens' *Revert*®) will degrade more rapidly and easily flush out of the borehole when subjected to high pressure water flow. It is critical the borehole walls are free of bentonite or other coatings materials to prevent unwanted VWPT.

Drilling in an area overlying waste requires the advancement of 6¼-in. inside diameter hollow-stem augers (HSA) to a depth no less than 10 feet below the bottom of waste. The HSA then serves as a temporary casing to protect the borehole from caving of the loose waste material in the boring. After the HSA is set, mud-rotary drilling can begin inside the HSA. The drilling method is similar to un-cased drilling in technique, tools, and materials.

Following advancement of the boring to its maximum depth, a complete flushing of the borehole is performed. Flushing the borehole is performed by a constant flow of clean water through the drill string and bit until cuttings and drilling fluids are no longer observed entering the drill tub. In general, up to 30 minutes is expected for the borehole to be adequately flushed. The driller shall observe the inflow of the drill tub and

determine when the water is clean. The CQA geologist/engineer should confirm the observation before terminating the flush and retrieving drill pipe.

Immediately following drill pipe retrieval, the wireline piezometer installation should begin. It is critical that the borehole be filled with water to minimize the potential for collapse of the uncoated boring walls. First, drilling sand shall be placed at the bottom of the borehole. Lager diameter drilling sand is preferred to allow rapid sand deposition. A Number 3 drilling sand was found to provide favorable sand deposition rates. Smaller diameter sands, such as a Number 2 drilling sand, tended to pass through the water column too slowly, thus delaying the installation process. Drilling sand shall be poured into the boring at a steady and slow rate. The driller should monitor the thickness of the sand constantly and sand addition shall be stopped when the total thickness of sand at the base of the borehole is between one and one and one-half feet.

After achieving the correct thickness of sand at the base of the borehole, the first VWPT is lowered into the borehole. Each VWPT will be delivered to the boring location by the CQA geologist/engineer. Prior to installation, the CQA geologist/engineer will calibrate and pre-assemble each VWPT. When ready for installation, the CQA geologist/engineer will present a pressure transducer submerged in water and sealed with a latex membrane. A length of five-conductor cable is attached to the transducer. The borehole must be filled with water to overflowing at the time of installation. The installer shall lower the VWPT, still protected by the latex membrane, into the water. Once the VWPT is completely submerged, the latex membrane is removed and discarded outside of the borehole. The VWPT shall be lowered by cable to the base of the borehole, and rests lightly on top of the sand installed earlier. It is recommended to measure and mark on the VWPT wire the length needed to place the VWPT at the selected depth. The likelihood of installing a VWPT at the incorrect depth is minimized by taking this extra step because it is common for the VWPT to become lodged in the borehole above the base. By pre-marking the total length of wire needed, the installer can be assured that the VWPT is set at the correct depth. Additional cable is fixed to the drill head to prevent it from falling into the borehole.

Once installed, an additional one foot of drilling sand is poured into the borehole to seat the VWPT. The thickness of the overlying sand is critical and all efforts should be made to keep overlying sand at a thickness of one to one and one-half feet. Bentonite chips are added to the borehole slowly to raise the bottom of the boring to one-foot below the elevation of the next clustered VWPT. Each clustered VWPT is installed in a manner similar to the method described above. When all clustered VWPT are installed, the borehole is filled to the ground surface with bentonite chips. There is no need to

complete the borehole with sand or concrete, however it may be useful to cap the borehole with one to three feet of drilled cuttings.

SETTLEMENT PLATES

Settlement Plate and Settlement Sensor

The procedure to be followed for installing settlement plate and sensor in field along with the manufacturers information for conducting QA/QC for data collection is attached.

MANUFACTURER'S INFORMATION

GEOCOMP Corporation
1145 Massachusetts Avenue
Boxborough, MA 01719

www.GEOCOMP.com
phone: 978-635-0012
fax: 978-635-0266

Instrument Installation Procedure

Settlement Plate (SP)

Figure 1 – Settlement Plate

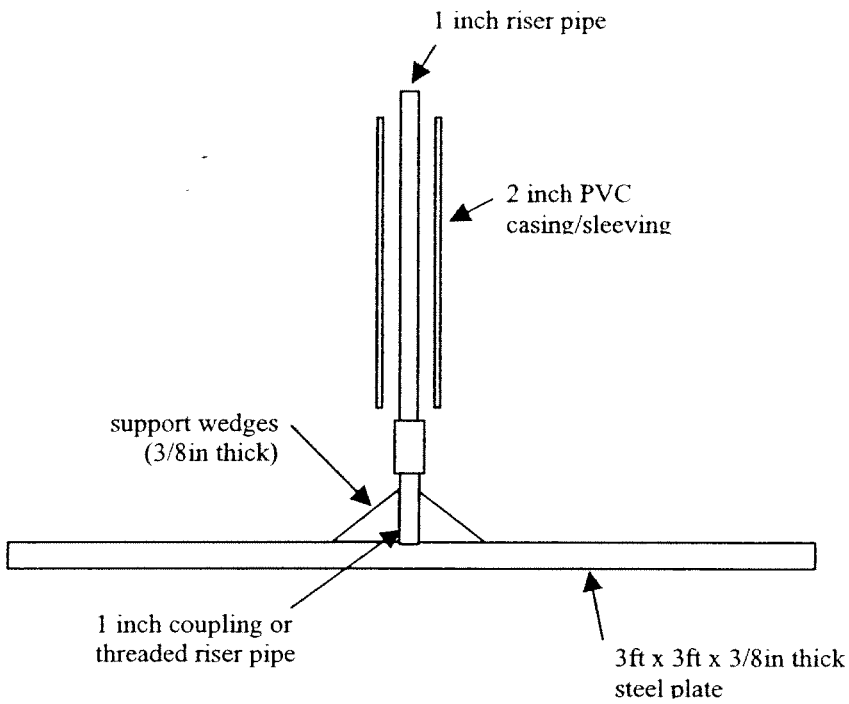

GEOCOMP QA/QC Checklist

Vibrating Wire Piezometer Readout Unit

Project Name _____

Delivery Details

	Rec'd	Date
	Batch Identifier	
	Quantities OK?	check against order details

Serial No	**Charger, Leads, software**	**Calib.Cert?**	**Visual Inspection**

Manufacturers QA/QC

QA/QC inspection?
Calibration certificates?
Checklists?

GEOCOMP QA/QC Checklist

Vibrating Wire Piezometer

Project Name _____

Delivery Details

	Rec'd	Date
	Batch Identifier	
	Quantities OK?	check against order details

			Visual Inspection		
Serial No	Match cable and on QA/QC	Calib.Cert?	Connector	Inst.	Cable

Manufacturers QA/QC

QA/QC inspection?

Test Data?

Calibration checklist and certificates?

GEOCOMP pre-installation acceptance test record form

Vibrating Wire Piezometer

Project Name _____
Instrument Type Vibrating Wire Piezometer
Serial No. _____

Test Details

Date/Time _____ Temperature _____
Technician _____ BaroPressure _____

Testing Equipment

Readout Unit GK403 Standard Controls _____
Serial No. _____ _____

Applied Pressure (psi)	Reading	Temp	Comments
0			Matches Factory Readings?
10			
20			
30			
40			
50			

Calculated Linear Gauge Factor _____
Manufacturer's Gauge Factor _____
Match _____

Instrument Cable connection _____ OK? *read while bending*
Connector end _____ OK? *check for stability*

Cable Length _____
Coil Resistance (Ohms) _____
Therm Resistance (Ohms) _____
Shorts? _____

Pass/Fail? _____

General comments/notes _____

Instrument Installation Record

VIBRATING WIRE PIEZOMETER - ID _____

Installation Start Date _____
Installation Finish Date _____
Weather _____
_____
Installed by _____
Supervised by _____
Drillers _____
_____
Rig _____
Augers _____
Borehole Diameter _____ in

Chainage _____
Offset _____

Easting _____
Northing _____

Grnd Elev. _____ ft PD

Comments

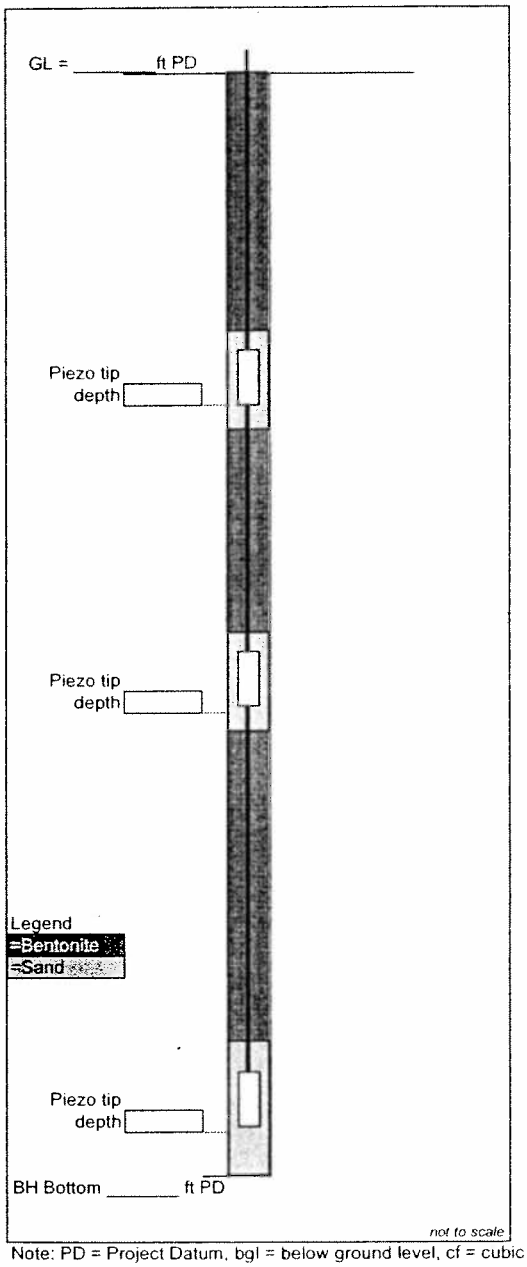

Note: PD = Project Datum, bgl = below ground level, cf = cubic feet

Geology

Planned Installation

BH bottom (depth) _____ ft bgl
BH bottom (elev. PD) _____ ft PD

Piezometer Tip (depth) _____ ft
Top of Sand (depth) _____ ft
Top of Bentonite (depth) _____ ft

Grout _____ cf

Actual Installation

BH bottom (depth) _____ ft bgl
BH bottom (elev. PD) _____ ft PD

Piezometer Tip (depth) _____ ft
Top of Sand (depth) _____ ft
Top of Bentonite (depth) _____ ft

Grout _____ cf

Installation Details

	1	2	3
Tip Elevation	_____ ft PD	_____ ft PD	_____ ft PD
VWPZ Model	_____	_____	_____
Serial	_____	_____	_____
VWPZ wire length	_____ ft	_____ ft	_____ ft
VWPZ body length	_____ in	_____ in	_____ in
Calibration Factor	_____ /ft	_____ /ft	_____ /ft
Thermal Factor	_____ /deg F	_____ /deg F	_____ /deg F
Zero Reading	_____ Hz	_____ Hz	_____ Hz
Zero Temperature	_____ deg F	_____ deg F	_____ deg F

Samples

Sample No.	depth (ft bgl)	Pen/Rec	Description

Rosalie Island Grading Project - Instrument Installation Record

INSTRUMENT TYPE & ID _____

ıstallation Start Date _____
tallation Finish Date _____
Weather _____

Installed by _____
Supervised by _____
Drillers _____

Rig _____
Augers _____
Borehole Diameter _____

Chainage _____
Offset _____

Easting _____
Northing _____

Grnd Elev. _____ ft PD

Comments

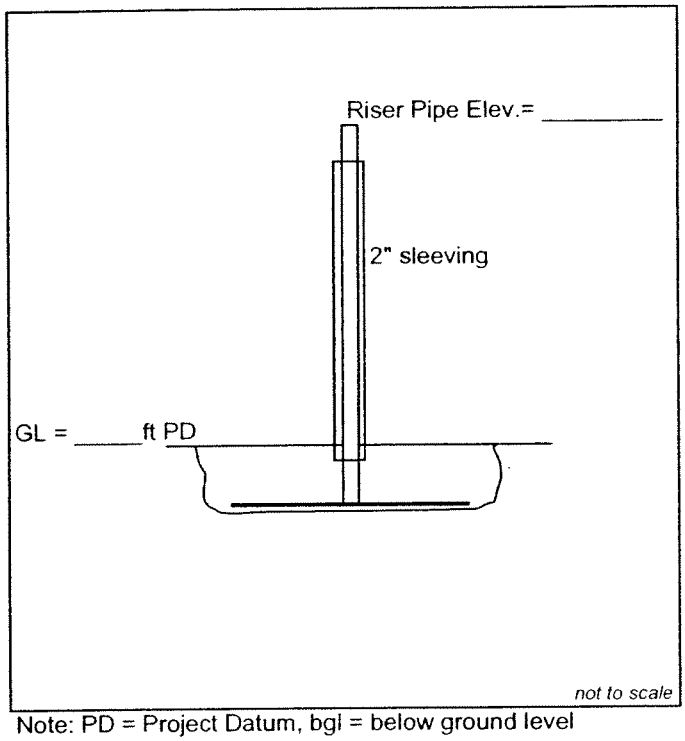

Note: PD = Project Datum, bgl = below ground level

Geology

Planned Installation

Base Material Existing Ground

Length of 1in pipe used 5 ft

Actual Installation

Base Material _____

Length of 1in pipe used _____ ft

Installation Details

Plate Level? _____ (yes/no)
Top of riser pipe elevation _____ ft PD
Interior riser pipe elevation check _____ ft from top of riser

GEOKON

The World Leader in Vibrating Wire Technology

48 Spencer Street
Lebanon, NH 03766, USA
Tel: 603•448•1562
Fax: 603•448•3216
E-mail: geokon@geokon.com
http://www.geokon.com

Instruction Manual

Model 4600

VW Settlement Sensor

No part of this instruction manual may be reproduced, by any means, without the written consent of Geokon, Inc.

The information contained herein is believed to be accurate and reliable. However, Geokon, Inc. assumes no responsibility for errors, omissions or misinterpretation. The information herein is subject to change without notification.

Copyright © 1984 by Geokon, Inc.

(Doc Rev C, 4/01)

Contents

1. General Description 1

2. Installation Procedures 3

3. Taking Readings 4

4. Data Reduction 5

5. Maintenance and Trouble Shooting 5

Appendix A

Conversion Table Resistances to Temperature 7

Appendix B

Model 4600M Multilevel Settlement Monitoring System 8

1. General Description

The 4600 Settlement System is designed to measure the settlement of a point relative to a point located immediately below it, in solid ground (bedrock). The usual method of installation is shown in Figure 1.

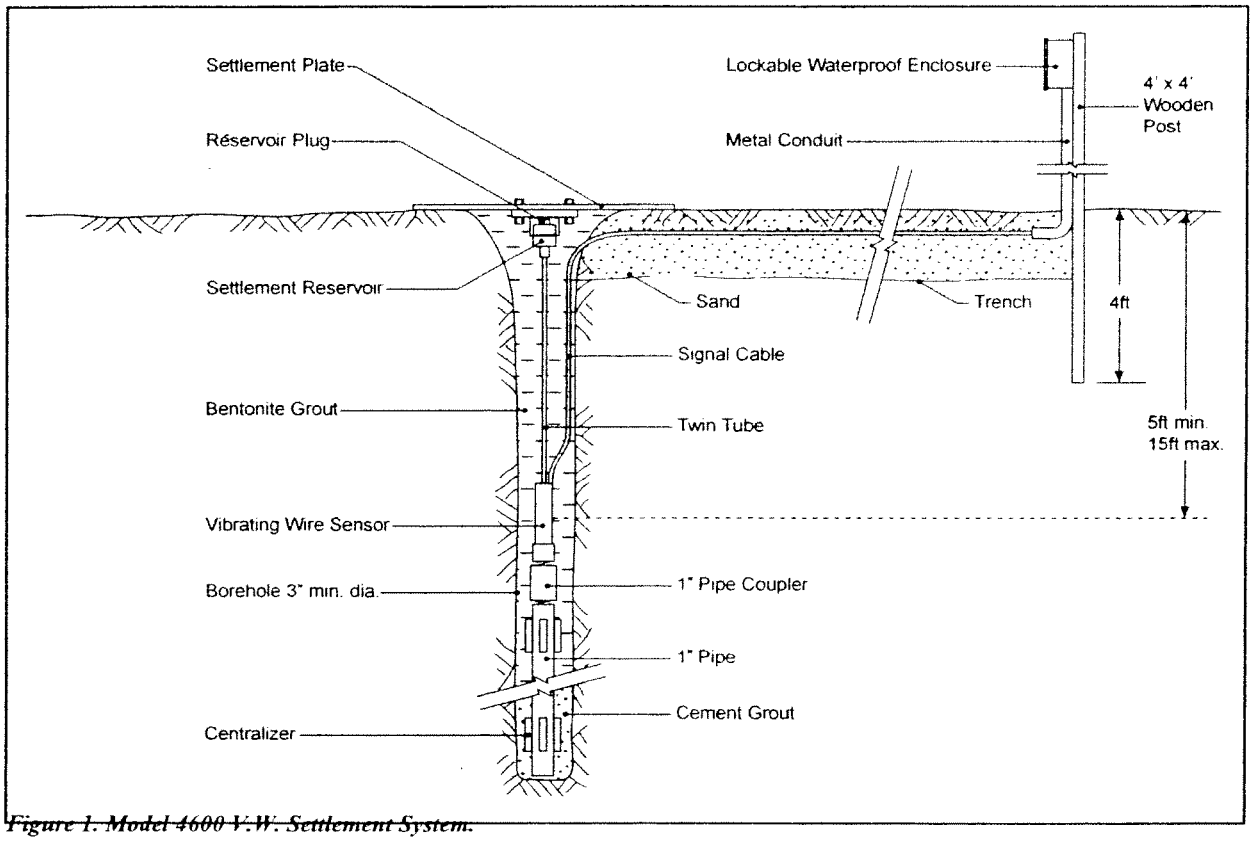

Figure 1. Model 4600 V.W. Settlement System.

The 4600 system has the disadvantage of requiring a borehole to reach solid ground but has the distinct advantage of avoiding the necessity for long horizontal runs of liquid-filled tubing to a remote readout location. The system is particularly suited to the measurement of settlements below sand islands constructed in marine environments.

A series of 4600 system, installed vertically above each other in a single borehole, can be used to monitor subsurface settlements at different elevations.

A pressure sensor is located in solid ground by attaching it to the upper end of a steel pipe, or rod, placed inside a borehole drilled to bedrock. The lower end of the pipe is grouted in place. A liquid-filled tube extends upwards from the sensor to the reservoir, which is attached to a settlement plate.

The settlement plate, usually located at the ground surface, (i.e. the elevation of the mouth of the borehole) settles with the ground, thus altering the height of the liquid column inside the liquid tube above the sensor. The sensor detects the change in liquid pressure and is read by means of an electrical cable running up the borehole and then horizontally to the readout location.

Standard systems are filled with either de-aired water or de-aired antifreeze solution, with chemicals added to prevent the growth of algae. The system is "closed" in that the inside of the sensor is connected, via a vent line,

between the sensor and the reservoir for the standard sensor range (7 meters) is 3 to 5 meters. The minimum spacing can be smaller so long as the spacing exceeds 3 times the anticipated maximum settlement. Thus if the anticipated maximum settlement is 0.5 meters, the sensor/reservoir spacing can be as close as 1.5 meters.

2.2

The Model 4600 Assembly is usually shipped with the liquid tube pre-filled with de-aired liquid. The liquid tube is of such a length to accommodate the spacing between sensor and reservoir specified at the time of ordering. Measure the depth of the borehole and prepare a length of pipe, (1" water-pipe is ideal), which will place the sensor at the desired elevation, (usually from 3 to 5 meters below the surface depending on the anticipated settlement, as previously discussed.)

2.3

Attach the sensor to the upper end of the pipe (the sensor normally has a matching thread built into it). Tie a long piece of rope to the upper end of the pipe and lightly tape a grout pipe to the lower end of the pipe. Lower the pipe into the borehole until it rests on the bottom.

2.4

Tremie full strength grout into the bottom 1.5 meters of the borehole. Pull the grout-pipe up 2 meters and tremie in a soft bentonite grout until the borehole is full.

2.5

If the hole is cased, the casing can now be removed. But first, tie the reservoir and signal cable to the rope and tie the rope to the top of the drill mast so that the casing can slide over and around the reservoir and signal cable as the casing is removed from the borehole.

2.6

4600 Settlement Systems are usually shipped with the reservoir completely filled with de-aired liquid so that there is no danger of air bubbles entering the liquid tube during shipment. To put the 4600 system into service it is necessary, now, to remove 10cc of liquid from the top of the reservoir and to connect the top of the reservoir to the desiccant chamber and vent line. Grip the Swagelock cap on top of the reservoir and pull the reservoir plug out of the top of the reservoir, (the larger of the two Delrin plugs). A syringe is provided for removal of the liquid and a short copper U-tube is supplied, with fittings, to be connected to the top of the reservoir after removal of the two Swagelock caps. Before replacing the reservoir plug and connecting the U-tube, add a few drops of light oil to the surface of the liquid to prevent evaporation.

2.7

Attach the settlement flange to the settlement plate using the bolts supplied.

2.8

While holding the reservoir in an upright position at all times, the settlement flange and plate can now be attached to the reservoir using the two machine screws provided or by using PVC cement obtained locally. (Federal Regulations prohibit the shipment of PVC cement). Apply PVC cement to the inside of the reservoir extension (see Figure 2) and to the outside of the top of the reservoir housing.

and **G** is the calibration factor supplied with the sensor.

A typical calibration sheet, as supplied by the factory, is shown in Figure 3 (page 6).

$\mathbf{E_0}$ = 541.623 meters

$\mathbf{R_0}$ = 6030

$\mathbf{R_1}$ = 6800

G = 1.78 mm/digit

$\mathbf{E}$ = 541.623 – (6800 – 6030) 1.78 x 10^{-3}

E = 540.252 meters

Or, in other words, there has been a settlement of 1.371 meters.

4.2 Corrections for temperature

Usually, since the 4600 system is completely buried, temperature effects are negligible.

The elevation, E_T, corrected for temperature is given by the equation.

$$\mathbf{E_T = E_0 - (R_1 - R_0)\ G + (T_1 - T_0)\ K}$$

where $\mathbf{T_0}$ is the initial temperature in °C,

$\mathbf{T_1}$ is the subsequent temperature in °C,

and **K** is the temperature correction factor given on the calibration sheet.

5. Maintenance and Trouble Shooting

Since all the 4600 Settlement System components are buried there is no maintenance to observe and little can be done in the event the readings become suspect. Unstable readings, especially with data loggers, may be caused by electrical noise form nearby power lines or electrical equipment. Make sure that the ground conductor is connected to the ground on the datalogger, or to the blue clip on the GK401 or GK403 patchcord.

Resistance between the black and red conductors should be 180 ohms ± 10 ohms plus 5 ohms for every 100 meters of lead wire.

Resistance between the green and white wires depends on the temperature as shown by the Thermistor Chart in Appendix A (page 7).

Appendix A:

Thermistor Linearization using Steinhart and Hart Log Equation

Tech Memo 91-03 Doc Rev 6-94, Geokon, Inc.

Thermistor Type: YSI 44005, Dale #1C3001-B3, Alpha #13A3001-B3

Basic Equation:

$$T = \frac{1}{A + B(LnR) + C(LnR)^3} - 273.2$$

where:

T = Temperature in °C.

LnR = Natural Log of Thermistor Resistance

A = 1.4051×10^{-3}

B = 2.369×10^{-4}

C = 1.019×10^{-7}

Note: Coefficients calculated over -50° to +150° C. span.

Resistance versus Temperature Table

Ohms	Temp	Ohms	Temp	Ohms	Temp	Ohms	Temp	Ohms	Temp
201.1K	-50	16.60K	-10	2417	+30	525.4	+70	153.2	+110
187.3K	-49	15.72K	-9	2317	31	507.8	71	149.0	111
174.5K	-48	14.90K	-8	2221	32	490.9	72	145.0	112
162.7K	-47	14.12K	-7	2130	33	474.7	73	141.1	113
151.7K	-46	13.39K	-6	2042	34	459.0	74	137.2	114
141.6K	-45	12.70K	-5	1959	35	444.0	75	133.6	115
132.2K	-44	12.05K	-4	1880	36	429.5	76	130.0	116
123.5K	-43	11.44K	-3	1805	37	415.6	77	126.5	117
115.4K	-42	10.86K	-2	1733	38	402.2	78	123.2	118
107.9K	-41	10.31K	-1	1664	39	389.3	79	119.9	119
101.0K	-40	9796	0	1598	40	376.9	80	116.8	120
94.48K	-39	9310	+1	1535	41	364.9	81	113.8	121
88.46K	-38	8851	2	1475	42	353.4	82	110.8	122
82.87K	-37	8417	3	1418	43	342.2	83	107.9	123
77.66K	-36	8006	4	1363	44	331.5	84	105.2	124
72.81K	-35	7618	5	1310	45	321.2	85	102.5	125
68.30K	-34	7252	6	1260	46	311.3	86	99.9	126
64.09K	-33	6905	7	1212	47	301.7	87	97.3	127
60.17K	-32	6576	8	1167	48	292.4	88	94.9	128
56.51K	-31	6265	9	1123	49	283.5	89	92.5	129
53.10K	-30	5971	10	1081	50	274.9	90	90.2	130
49.91K	-29	5692	11	1040	51	266.6	91	87.9	131
46.94K	-28	5427	12	1002	52	258.6	92	85.7	132
44.16K	-27	5177	13	965.0	53	250.9	93	83.6	133
41.56K	-26	4939	14	929.6	54	243.4	94	81.6	134
39.13K	-25	4714	15	895.8	55	236.2	95	79.6	135
36.86K	-24	4500	16	863.3	56	229.3	96	77.6	136
34.73K	-23	4297	17	832.2	57	222.6	97	75.8	137
32.74K	-22	4105	18	802.3	58	216.1	98	73.9	138
30.87K	-21	3922	19	773.7	59	209.8	99	72.2	139
29.13K	-20	3748	20	746.3	60	203.8	100	70.4	140
27.49K	-19	3583	21	719.9	61	197.9	101	68.8	141
25.95K	-18	3426	22	694.7	62	192.2	102	67.1	142
24.51K	-17	3277	23	670.4	63	186.8	103	65.5	143
23.16K	-16	3135	24	647.1	64	181.5	104	64.0	144
21.89K	-15	**3000**	**25**	624.7	65	176.4	105	62.5	145
20.70K	-14	2872	26	603.3	66	171.4	106	61.1	146
19.58K	-13	2750	27	582.6	67	166.7	107	59.6	147
18.52K	-12	2633	28	562.8	68	162.0	108	58.3	148
17.53K	-11	2523	29	543.7	69	157.6	109	56.8	149
								55.6	150

Appendix B:

a few drops of light oil to the liquid surface to prevent evaporation. Now replace the Bleed Screw and tighten. It would be better if the Reservoir were not laid on its side from this point on.

The spring-loaded anchors are tied and held in their closed position using the trip cords supplied. The hydraulically actuated cutter or the manually operated pull-pins are passed through the loops in the trip cords. A tremie pipe may be taped lightly to the lowermost sensor, or to the pipe on which it sits.

As the assembly is lowered into the borehole, each Connection Valve Screw is removed and replaced by the Seal Screw provided. Note: more than one person will be required to organize and control the various hydraulic leads/pull-cords, tubes and cables as they are lowered into the borehole. If pull-cords are used make sure that they are kept free at all times so that the anchors cannot be tripped prematurely.

The uppermost reservoir, if located at the surface, can be attached to a settlement plate, as described in Section 2.8

When all the sensors are in position, the casing can be pulled, (if the borehole is cased,) taking care not to damage or pull on the electrical cables coming from each sensor. As the casing is pulled, each spring-loaded anchor is tripped hydraulically as it clears the bottom of the casing. The borehole may be left open, or filled with a soft bentonite cement grout tremied into the borehole as the tremie pipe is retracted.

Multiple Level Settlement Systems

I- Introduction

Known as the "Missing Link," the Seminole Expressway Project 2 is the northern 5.7-mile portion of Toll Road 417/Central Florida GreeneWay. It will connect I-4 to Toll Road 417, which currently ends at US 17-92 in Sanford. Two new ramps will be constructed at both Lake Mary Boulevard and U.S. 17 (92), with new interchanges being included at County Road (C.R.) 46A, Rinehart Road and I-4. The $265 million project is expected to open to traffic in 2003.

The ramp construction at Lake Mary Boulevard involves the construction of a new embankment over soft muck deposits. Large settlements are anticipated due to the abundant presence of high organic content soils. The long-term settlements may include both primary consolidation and creep of the organic materials. Preloading construction technique was used to reduce the settlement of the future embankment. In order to verify the preliminary design and get a better understanding of the settlements of the organic soils, a site-monitoring program was undertaken. Due to the variable complex geology conditions as well as time of interest, settlement plates are augmented with settlement sensors. Multiple settlement sensors in a given hole and the use of vibrating wire instrumentation allowed for accurate assessment of settlement by layer as well as long-term response. Remote data acquisition system was used to send the field data to central computer at the University of Florida.

II- Equipment

Geokon, Inc. of Lebanon, NH, manufactured the settlement sensors. The equipment list included: settlement cells (vibrating wire pressure sensors) and data logger. In order to measure the settlement of each layer, a series of three settlement cells had been connected in each borehole.

Settlement cells consisting of vibrating wire pressure sensors located in a "closed" column of de-aired water or de-aired antifreeze connected to a reservoir, which is attached to another sensor or settlement plate. Each reservoir was equipped with a vent line, which is connected to a desiccant chamber to prevent moisture from entering the vent line from the reservoir. This arrangement ensures that the sensor readings are not influenced by temperature changes inside the reservoir, or by changes in barometric pressure. Three settlement cells are connected one on top of each other in each borehole to provide the settlement data for each of the soil layer. With the soil layer thickness information provided by the CPT soundings, the location of each cell had been determined to monitor settlement of each layer. The bottom VW sensor was fixed to the hard material layer at the bottom of borehole which is considered stationary. The top reservoir is attached to a steel plate and settles with the ground level. The two intermediate sensors and reservoirs are connected to each other and attached to the interface of the soil layers by two mechanical ground anchors.

Data logger using Geokon's Model 8020 MICRO-10 with a vibrating wire interface, data reduction software (Geokon's 8020-2) and a watertight metal enclosure. Also, the data logger will contain a cellular telephone package (Geokon's 8020-4) with modem and antenna compatible with the data logger. A 12-volt power supply with a solar panel (AP-75) and regulator for maintaining power was also included. Since the data will be collected over a long time frame (years), it is proposed that the cellular phone package was purchased too remotely download the data.

III- Installation

comparison. The graph also shows some rebound (from 1 to 2 inches) when the surcharge was removed in June 2001.

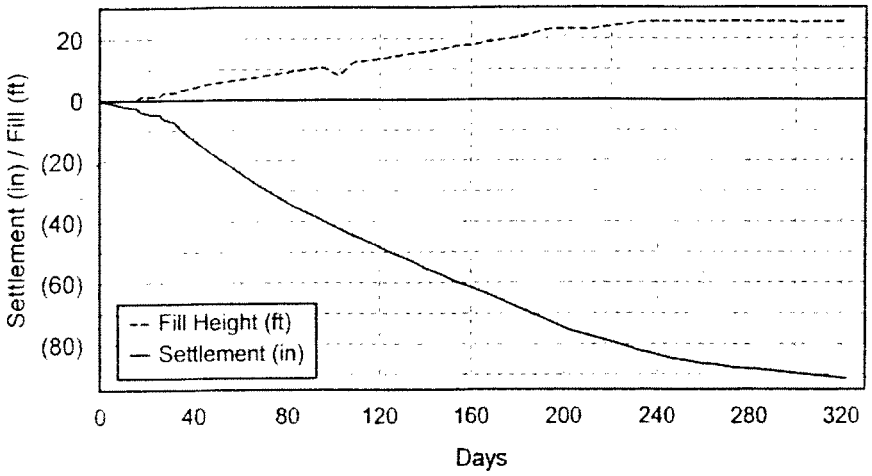

Figure 1: Settlement versus surcharge height

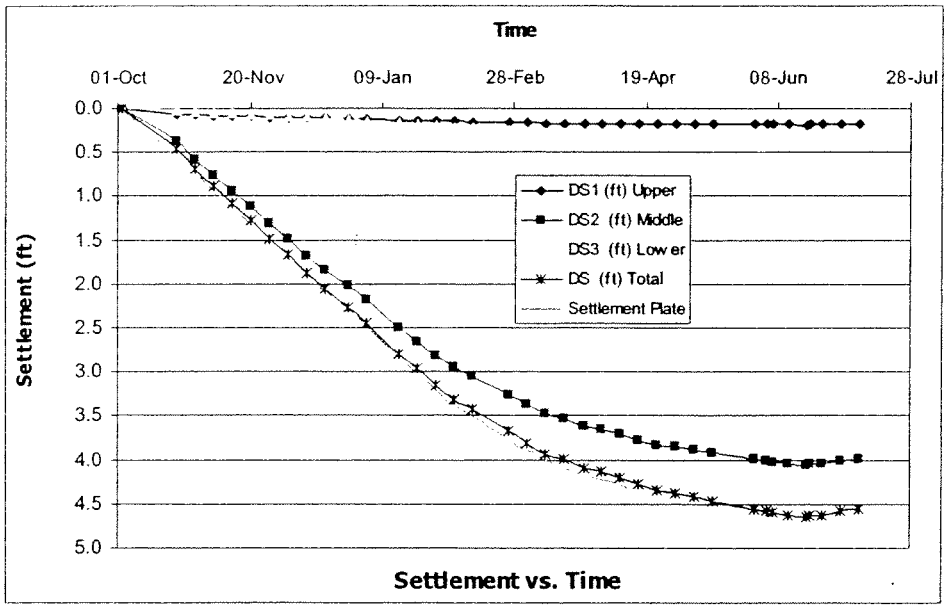

Figure 2: Settlement of different layers

V- Conclusions

The application of a multi level settlement system in this project has provided a unique set data which can be use to obtain detailed movement of each layer. Early stage data has showed a good agreement with other method of settlement acquisition. Long-term movement can be monitored with the automatic remote data acquisition system.

ATTACHMENT C

OUTLINE OF MONITORING REPORT

Geosyntec consultants

CHERRY ISLAND LANDFILL
EXAMPLE TABLE OF CONTENTS FOR
QUARTERLY GEOTECHNICAL MONITORING REPORT

1. EXECUTIVE SUMMARY AND RECOMMENDATIONS
2. INTRODUCTION
3. BACKGROUND
4. LANDFILLING ACTIVITIES
5. INSTRUMENT INSTALLATION, MAINTENANCE, AND REPAIRS
6. MONITORING RESULTS FOR INCLINOMETERS AND SHAPE ACCELEROMETER ARRAYS
   - 6.1 Introduction
   - 6.2 Inactive Areas
   - 6.3 Active Areas
   - 6.4 Inclinometer Data Summary
7. MONITORING RESULTS FOR PIEZOMETERS
   - 7.1 Introduction
   - 7.2 Inactive Areas
   - 7.3 Active Areas
   - 7.4 Piezometer Data Summary
8. MONITORING RESULTS FOR SETTLEMENT PLATES AND SENSORS
   - 8.1 Introduction
   - 8.2 Inactive Areas
   - 8.3 Active Areas
   - 8.4 Settlement Data Summary
9. DISCUSSION OF UNCHARACTERISTIC RESULTS AND INSTRUMENT MAINTENANCE RECOMMENDATION
10. ENGINEERING RECOMMENDATIONS
11. SUMMARY
12. REFERENCES

CHERRY ISLAND LANDFILL
EXAMPLE TABLE OF CONTENTS FOR
QUARTERLY GEOTECHNICAL MONITORING REPORT
(Continued)

LIST OF TABLES

Action Items During Quarter
Recommended Action Items for Next Quarter
Instruments Installed
Decommissioned Geotechnical Instruments
Summary of Geotechnical Instrument Damage
Summary of Inclinometers in Inactive Areas
Summary of Inclinometers and SAAs in Active Areas
Summary of Standpipe Piezometers in Inactive Areas
Summary of Interior Vibrating-Wire Piezometers in Active Areas
Summary of Settlement Plates in Inactive Areas
Summary of Settlement Sensors in Active Areas

LIST OF FIGURES

Phase Boundaries
Fill Locations
Remaining Airspace
Inclinometer Location Plan
Piezometer Location Plan
Settlement Plate and Settlement Sensor Location Plan

APPENDICES

Memoranda Issued during Quarter
Inactive Areas Inclinometer Data
Active Areas Inclinometer Data
Inactive Areas Piezometer Data
Active Areas Piezometer Data
Settlement Data
Shape Accelerometer Array Data

ATTACHMENT D

INSTRUMENT REPAIR GUIDELINES

STANDARD VERTICAL INCLINOMETER SPLINT REPAIR

1. Tie-off the aluminum or steel protective casing to 3 driven grade stakes utilizing a 2-lb. hammer and a 100-ft. nylon rope.

2. Open or remove locking lid on the protective casing and survey top of blue ABS cap (which is inserted within the ABS casing) in order to extend replacement to same elevation. A surveyor's level and rod is needed to accomplish this task.

3. Excavate and shovel (around inclinometer) to approximately 1.5 ft. below the ABS casing problem area utilizing an excavator and a hand shovel. The protective casings are approximately 7.5 ft. long and extend above the ground surface 2 to 5 ft.

4. Tie top of protective casing unit to the excavator bucket with a strap. While relieving downward pressure, saw the ABS casing with a carpenter's saw as square as possible and plug the hole with a towel when finished.

5. Using the blue ABS cap as a guide, file the end of the cut with a wood rasp until square. Clean around ABS casing approximately 1 ft. below cut with paper towels.

6. Saw a 1 ft. section from the male end of a new 10 ft. ABS casing and square the cut end. A measuring tape will be needed to perform this procedure. Generally, the coupling portion of the male piece is not counted as part of the one foot length.

7. Butt (squared ends to each other) the 1 ft. ABS section to the previously exposed ABS casing within the ground. Apply ABS cement to butt surface and tape outside area of both sections using electrician's tape.

8. Insert rodded T Tool into the grooves of ABS casing to the butted area of the two sections. Vice grip the rod at this location in order to achieve the necessary groove alignment between the casings once the splint has been placed.

9. Apply ABS cement on outside surface of both casing sections approximately 6-in. above and below the butt.

10. Place 3-in. Schedule 80 PVC splint with 3/8 gap along entire 10-in. length on the butt and tighten the two 3.5 in. hose clamps located near the ends with a screwdriver.

11. Apply ABS cement to the split along the PVC and duct tape entire splint.

12. Apply ABS cement to the outside surface of the eventual coupling placement location of the splinted 1 ft. ABS section. Insert the ABS coupling and apply ABS cement in the same fashion to the replacement section, which will extend to the previously surveyed elevation.

13. Apply Vaseline® with a putty knife around splint, 1 ft. ABS section, and ABS replacement section to help prevent heave of casing or wrap multiple layers of plastic around the ABS section(s) to achieve the same effect. Upon completion, place ABS cap on casing.

14. Backfill around ABS column with fine to course sand until top of aluminum anodized protective casing would be approximately 1 in. above the ABS casing upon replacement.

15. Center the aluminum protective casing over the ABS column and backfill around casing with fine to course sand. Tamper and compact sand by foot or butt of shovel while plumbing protective casing with a level until the original ground surface has been reached. The excavator will backfill the remaining area simultaneously and assure the inclinometer is accessible by vehicle.

16. Sand is then placed within the aluminum protective casing (around the ABS casing) until the top is encountered.

17. Place lower portion of lid with a 5/32-in. Alan wrench in order to secure upper locking cap.

NOTE: The underlined words denote materials needed to perform the procedure.