FACILITY I.D. # i FACILITY NAME Indian River Power

APPLIC. DATE 4/15/09 CONTACT David Barber

PERMIT APPLIC. DESC amend Units 3 & 4, install 2 strg tanks (aqueous Ammonia) 5 Lime Stng silos, Byproduct storage silo

REC. DATE 4/17/09 ENGINEER TK EIS EFES UPDATE

81/0660 · C · A8
82/0149 · C · A9 (Y or N) Y or N

APPLICATION # 2009/0105 C TYPE OF APPLICATION

2009/0106 · C
2009/0107 · C

ADVERTISE DATE DSN (Y OR N)
7/19/09

LEGAL NOTICE 7/19/09 order PH for 8/12/09

NOTES

1526 (2)

FUND # 4830 (1) CHECK # 71485

FUND # 4999 AD COST RECOVERY CHECK# 71486

CHECK LIST:

APPLIC SIGNED ✓
FEE INCLUDED ✓
PROOF LOCAL ZONING
COASTAL ZONE
EST. OF EMISSIONS ✓
APPLICANT BACKGROUND

REVIEWED
DATE ENTERED 5/14/09

F:/IMA/APPLICATION CHECKLIST.DOC

Austin Joanna M. (DNREC)

From: Lilly Tom (DNREC)
Sent: Monday, April 20, 2009 16:24
To: Austin Joanna M. (DNREC)
Cc: French Joanna (DNREC); Foster Paul (DNREC)

The break down is

Amendment Unit 3	31/10000 - C - 48	175
Amendment Unit 4	32/0149 - C - 47	175
Construction Permit Aqueous Ammonia Storage Tank		215 - 2009/0105 - C
5 Construction Permits for Lime Storage Silo with Baghouses		1075 - 2009/0106 - C
1 Construction Permit for Byproduct Storage Silo		215 - 2009/0107 - C
		$1855

Advertisement (9x165) $1485

By my calculations the fees are okay and the checks can be cashed.

Have a great afternoon and evening!

Tom Lilly, P.E.
Engineer
Air Quality Management Section
715 Grantham Lane
New Castle, DE 19720
(302)323-4542 or (302)739-9402

Indian River Operations Inc.
P.O. Box 408
Power Plant Road
Millsboro, Delaware 19966

An NRG Energy Company

RECEIVED
APR 17 2009
33203
AIR QUALITY MGT.

April 16, 2009

Mr. Paul Foster
Program Manager
Air Quality Management Section
Department of Natural Resources and Environmental Control
Division of Air & Waste Management
156 South State Street
Dover, DE 19901

Re: Indian River Units 3 and 4
Regulation 1102 Permit Application

Dear Mr. Foster:

The purpose of this correspondence is to submit to the Department of Natural Resources and Environmental Control ("DNREC" or "the Department") a Regulation 1102 Permit Application for installation of pollution control devices on the Indian River Generating Station ("Indian River") Units 3 and 4.

In order to comply with the emission limitations established in the Consent Order established between NRG and DNREC, NRG is planning on installing back end control systems on Units 3 and 4 at the Indian River Power Generating Station. The technology applications are defined in the attached application and are designed to provide a multi-pollutant control approach that removes SO2, NOx and Hg from the flue gas for these units.

The facility currently operates under Regulation No. 30 (Title V) Operating Permit AQM-005/00001. As required under Air Quality Management Regulations No. 1102 and 30, NRG is filing this Regulation 1102 application for the construction and installation of the back end controls required to achieve compliance and meet the obligations of the Consent Order. Upon issuance of a Regulation 1102 construction permit, NRG will request an administration amendment to their Regulation No. 30 Operating Permit to incorporate the terms and conditions of the construction permit as provided for under Regulation No. 30, Section 7(d)(1)(v).

Paul Foster
April 16, 2009

The Regulation 1102 application includes the following sections:

- Section 1 - Process Description
- Section 2 – Process Flow Diagrams and Plot Plan
- Section 3 – Regulation 1102 Application Forms
- Section 4 – Emission Calculations
- Section 5 – Material Safety Data Sheets
- Section 6 – Fees

As defined in Section 6 and in accordance with the Air Quality Management Construction Permit Fee Calculator, copies of checks in the amount of $1,855.00 for permit fees and $1,485.00 for advertising fees are included in Section 6. The original checks have bee provided under separate cover.

Indian River is pleased to present this permit application to the Department. Please contact me at (302) 540-0327 if you have any questions about the information submitted in the application.

Sincerely,

David Bacher
Regional Manager, NRG Energy, Inc.

cc:	J. French	(DNREC)
	T. Lilly	(DNREC)
	J. Robertson	(Indian River, NRG)
	F. Sullivan	(NRG)

Indian River Operations Inc.
P.O. Box 408
Power Plant Road
Millsboro, Delaware 19966

An NRG Energy Company

April 16, 2009

Mr. Paul Foster
Program Manager
Air Quality Management Section
Department of Natural Resources and Environmental Control
Division of Air & Waste Management
156 South State Street
Dover, DE 19901

Re: Indian River Units 3 and 4
Regulation 1102 Permit Application

Dear Mr. Foster:

The purpose of this correspondence is to submit to the Department of Natural Resources and Environmental Control ("DNREC" or "the Department") Permit Application Fees associated with the submittal of our Regulation 1102 Permit Application for installation of pollution control devices on the Indian River Generating Station ("Indian River") Units 3 and 4, filed April 16, 2009.

As defined in Application and in accordance with the Air Quality Management Construction Permit Fee Calculator are checks in the amount of $1,485.00 for permit fees and $1,815.00 for advertising fees.

Indian River is pleased to present this permit application to the Department. Please contact me at (302) 540-0327 if you have any questions about the information submitted in the application.

Sincerely,

David Bacher
Regional Manager, NRG Energy, Inc.

cc:	J. French	(DNREC)
	T. Lilly	(DNREC)
	J. Robertson	(Indian River, NRG)
	F. Sullivan	(NRG)

Vendor NAME: **STATE OF DELAWARE** CHECK DATE: **April 14, 2009** CHECK NO: **71486** VENDOR KEY: **117956**

VOUCHER NO.	INVOICE DATE	INVOICE NO.	INVOICE REMARK	GROSS AMOUNT	NET AMOUNT
745541	4/9/09	09-INV-0409A		1,485.00	1,485.00
			TOTALS	$1,485.00	$1,485.00

Please Detach Before Presenting for Payment

NRG

Bank of America, N.A.
Atlanta, Dekalb County, Georgia

NRG Energy, Inc
211 Carnegie Center
Princeton NJ 08540-6213

64-1278
611 GA

71486

April 14, 2009

VOID AFTER 90 DAYS

AMOUNT
********$1,485.00

PAY One thousand four hundred eighty five and 00/100 Dollars

To The Order Of

STATE OF DELAWARE 117956
EPCRA PROGRAM
156 SOUTH STATE STREET
DOVER, DE 19901

Christyn D. Sates

⑈00071486⑈ ⑆061112788⑆ 3299044315⑈

Vendor NAME: **STATE OF DELAWARE** CHECK DATE: **April 14, 2009** CHECK NO: **71485** VENDOR KEY: **117956**

VOUCHER NO.	INVOICE DATE	INVOICE NO.	INVOICE REMARK	GROSS AMOUNT	NET AMOUNT
745540	4/9/09	09-INV-0409		1,855.00	1,855.00
			TOTALS	$1,855.00	$1,855.00

Please Detach Before Presenting for Payment

NRG

NRG Energy, Inc
211 Carnegie Center
Princeton NJ 08540-6213

Bank of America, N.A.
Atlanta, Dekalb County, Georgia

64-1278
611 GA

71485

April 14, 2009

VOID AFTER 90 DAYS

AMOUNT
********$1,855.00

PAY One thousand eight hundred fifty five and 00/100 Dollars

To The Order Of

STATE OF DELAWARE 117956
EPCRA PROGRAM
156 SOUTH STATE STREET
DOVER, DE 19901

Christopher D. Sotos

⑈00071485⑈ ⑆061112788⑆ 3299044315⑈

STATE OF DELAWARE
DEPARTMENT OF NATURAL RESOURCES
& ENVIRONMENTAL CONTROL
DIVISION OF AIR & WASTE MANAGEMENT

AIR QUALITY MANAGEMENT SECTION

156 S. STATE STREET
DOVER, DELAWARE 19901

TELEPHONE: (302) 739 - 9402
FAX NO.: (302) 739 - 3106

May 4, 2009

Indian River Power, LLC, NRG Energy, Inc.
P.O. Box 408
Millsboro, DE 19966

Registered # 7006 0810 0001 0056 7597
Return Receipt Requested

ATTENTION: David Bacher
Regional Manager, Environmental Business

SUBJECT: **Permit Application to Amend Permit: APC-81/0660-C-A8; 82/0149-C-A7; 2009/0105-C; 2009/0106-C; 2009/0107-C**
Application Judged Administratively Complete

Dear Mr. Bacher:

The Department is in receipt of your application dated April 15, 2009. This application was for Amendments to Unit #3 and #4, and to install an Aqueous Ammonia Storage Tank, 5 Lime silos with baghouses and a Byproduct Storage Silo. Your application has been judged administratively complete by the Department.

Your assigned Environmental Engineer is Tom Lilly. Your environmental permitting contact may be reached in the New Castle office at (302) 323-4542 or the Dover office at (302) 739-9402, if you should have any questions concerning your application.

The status of your permit application may be tracked through DNREC's Delaware Environmental Navigator (DEN). This service can be accessed at http://www.dnrec.state.de.us/DNRECeis/ by choosing "Air Permits in the Pipeline" from the "Data View" pull-down menu.

Sincerely,

Joanna Austin

Joanna M. Austin
Administrative Specialist

pc: Tom Lilly
Dover File

LEGAL NOTICE
NOTICE OF PUBLIC HEARING

The Department of Natural Resources and Environmental Control, Division of Air and Waste Management, Air Quality Management Section, will conduct a public hearing to receive comments on the applications filed by Indian River Power, LLC Millsboro, to construct pollution control equipment necessary to comply with the Department's regulations and Consent Decree. The applications are for installation of a circulating dry scrubber, selective catalytic reduction, one (1) aqueous ammonia storage tank, five (5) lime storage silos with baghouses, and one (1) byproduct storage silo with a baghouse for Generating Units 3, and 4 to control sulfur dioxide and nitrogen oxides emissions at their facility located at 29416 Power Plant Road, Millsboro. This project will result in significant reduction of acid gas emissions, greater than 80%, as well as decreases in maximum allowable emissions of nitrogen oxide by 12,452 tons, sulfur dioxide by 35,642 tons, particulate matter by 4,730 tons, and ammonia by 372 tons..

The public hearing concerning the applications has been scheduled for 6:00 p.m. on August 12, 2009, at the Millsboro Fire Company, 109 E. State Street, Millsboro, DE. The applications may be inspected at the offices of the Division of Air and Waste Management, 156 S. State Street, Dover, DE 19001 and at 715 Grantham Lane, New Castle, DE 19720.

For additional information or an appointment to inspect the applications, please call Joanna French or Tom Lilly, in Dover at (302) 739-9402. Interested parties may submit comments in writing before the hearing. Statements and testimony may be presented orally or in writing at the hearing. Written statements may be presented prior to the hearing and should be addressed to:

Air Quality Management Section
Division of Air & Waste Management
156 S. State Street
Dover, DE 19901

Publication Instructions:

Invoice Coding: 090202

Please publish in the Delaware State News and News Journal, as a two-column display ad on the following date: Sunday 7/19/09

Delaware State News: ~~WEDNESDAY, April 16, 2008~~
News Journal: ~~THURSDAY, April 17, 2008~~

Account No.: SD0111

Austin Joanna M. (DNREC)

From: French Joanna (DNREC)
Sent: Wednesday, July 15, 2009 08:32
To: Gentry Penny J. (DNREC); Austin Joanna M. (DNREC)
Cc: Lilly Tom (DNREC); Mirzakhalili Ali (DNREC); Foster Paul (DNREC)
Subject: FW: IRPP adv
Importance: High
Attachments: Indian River Public Hearing final.docx

Penny,
Please use the attached ad for Indian River which includes Tom's change.
Thanks!
Joanna

Joanna L. French, P.E.
Managing Engineer
DNREC - Air Quality Management
156 South State Street
Dover, DE 19901
(302) 739-9402 (main number)
(302) 739-3106 (fax)

Blue Skies Delaware; Clean Air for Life

From: Lilly Tom (DNREC)
Sent: Wednesday, July 15, 2009 8:14 AM
To: French Joanna (DNREC); Gentry Penny J. (DNREC)
Cc: Foster Paul (DNREC); Mirzakhalili Ali (DNREC); Austin Joanna M. (DNREC)
Subject: RE: IRPP adv

The SO2 reduction in the ad needs to be changed from 137,874 to 35,642 tons. They had used a coal with a sulfur content of 3% to calculate potential maximum emissions. I did not catch this until driving to work this morning and had to revise it based on a current sulfur content of 1.2% for unit 3 and a current emissions rate of 1.2 pounds per million BTU for unit 4.

From: French Joanna (DNREC)
Sent: Wednesday, July 15, 2009 8:09 AM
To: Gentry Penny J. (DNREC)
Cc: Foster Paul (DNREC); Mirzakhalili Ali (DNREC); Lilly Tom (DNREC); Austin Joanna M. (DNREC)
Subject: FW: IRPP adv

Hi Penny,
Attached is the legal ad for Indian River's hearing. Please advertise on Sunday, 7/19.
Thanks!
Joanna

Joanna L. French, P.E.
Managing Engineer
DNREC - Air Quality Management
156 South State Street
Dover, DE 19901
(302) 739-9402 (main number)
(302) 739-3106 (fax)

Austin Joanna M. (DNREC)

From: Lilly Tom (DNREC)
Sent: Wednesday, July 15, 2009 08:14
To: French Joanna (DNREC); Gentry Penny J. (DNREC)
Cc: Foster Paul (DNREC); Mirzakhalili Ali (DNREC); Austin Joanna M. (DNREC)
Subject: RE: IRPP adv

The SO2 reduction in the ad needs to be changed from 137,874 to 35,642 tons. They had used a coal with a sulfur content of 3% to calculate potential maximum emissions. I did not catch this until driving to work this morning and had to revise it based on a current sulfur content of 1.2% for unit 3 and a current emissions rate of 1.2 pounds per million BTU for unit 4.

From: French Joanna (DNREC)
Sent: Wednesday, July 15, 2009 8:09 AM
To: Gentry Penny J. (DNREC)
Cc: Foster Paul (DNREC); Mirzakhalili Ali (DNREC); Lilly Tom (DNREC); Austin Joanna M. (DNREC)
Subject: FW: IRPP adv

Hi Penny,
Attached is the legal ad for Indian River's hearing. Please advertise on Sunday, 7/19.
Thanks!
Joanna

Joanna L. French, P.E.
Managing Engineer
DNREC - Air Quality Management
156 South State Street
Dover, DE 19901
(302) 739-9402 (main number)
(302) 739-3106 (fax)

Blue Skies Delaware; Clean Air for Life

From: Foster Paul (DNREC)
Sent: Tuesday, July 14, 2009 5:03 PM
To: Mirzakhalili Ali (DNREC)
Cc: Lilly Tom (DNREC); French Joanna (DNREC)
Subject: RE: IRPP adv

Made one typo correction

p

From: Mirzakhalili Ali (DNREC)
Sent: Tuesday, July 14, 2009 4:53 PM
To: Foster Paul (DNREC)
Cc: Lilly Tom (DNREC); French Joanna (DNREC)
Subject: RE: IRPP adv

Doiy...

From: Foster Paul (DNREC)

Sent: Tuesday, July 14, 2009 4:50 PM
To: Mirzakhalili Ali (DNREC)
Subject: RE: IRPP adv

No attachment Ali.

p

From: Mirzakhalili Ali (DNREC)
Sent: Tuesday, July 14, 2009 4:49 PM
To: Foster Paul (DNREC); Lilly Tom (DNREC); French Joanna (DNREC)
Subject: RE: IRPP adv

I added a few "by"s after the emission reduction estimates, please make sure that I understood your meaning correctly. If everything else is OK please go to press. Thanks.

From: Foster Paul (DNREC)
Sent: Tuesday, July 14, 2009 4:10 PM
To: Mirzakhalili Ali (DNREC); Lilly Tom (DNREC); French Joanna (DNREC)
Subject: IRPP adv

Ali look this one over.

p

RECEIVED
APR 17 2009
AIR QUALITY MGT.

NRG

INDIAN RIVER GENERATING STATION

Regulation 1102 Application
Air Quality Control System

Submitted to

DELAWARE DEPARTMENT OF NATURAL RESOURCES AND
ENVIRONMENTAL CONTROL
AIR QUALITY MANAGEMENT
156 South State Street
Dover, DE 19901

Submitted by
Indian River Power, LLC
PO Box 408
Millsboro, DE 19966

April 2009

Prepared by
Shaw Environmental and Infrastructure, Inc.

REGULATION 1102 APPLICATION CONTENTS
INDIAN RIVER GENERATING STATION
Air Quality Control System

	Executive Summary
Section 1 -	Process Description
Section 2 -	Process Flow Diagrams and Plot Plan
Section 3 -	Regulation 1102 Application Forms
Section 4 -	Emission Calculations
Section 5 -	Material Safety Data Sheets
Section 6 -	Fees

Executive Summary

On December 11, 2006, the Delaware Department of Natural Resources & Environmental Control (DNREC) adopted Regulation 1146, the Electric Generating Unit Multi-Pollutant Regulation to reduce emissions of mercury (Hg), sulfur dioxide (SO2), and nitrogen oxides (NOx). Regulation 1146 is applicable to the four coal-fired electric generating units (Units 1, 2, 3 and 4) located at Indian River Power LLC's (NRG) Indian River Power Generating Station located in Millsboro, Delaware. In September 2007, NRG and DNREC signed a Consent Order to establish emission and operational limitations to comply with Regulation 1146. The Consent Order establishes emission limitations for Hg, SO2 and NOx and requires the discontinued use of Unit 2 by no later than May 1, 2010 and the discontinued use of Unit 1 by May 1, 2011.

In order to comply with the emission limitations established in the Consent Order, NRG is planning on installing a new Air Quality Control System (AQCS) on Units 3 and 4 at the Indian River Power Generating Station. The AQCS will include the installation of a Selective Catalytic Reduction (SCR) system to augment the existing NOx controls and the installation of a circulating dry scrubber with a pulse jet fabric filter assembly for additional SO2 control. With the addition of the new AQCS, flue gas from both Units 3 and 4 will be combined and vented to the atmosphere via the existing Unit 4 stack.

The facility currently operates under Regulation No. 30 (Title V) Operating Permit AQM-005/00001. As required under Air Quality Management Regulations No. 1102 and 30, NRG is filing this Regulation 1102 application for the construction and installation of the AQCS. Upon issuance of a Regulation 1102 construction permit, NRG will request an administrative amendment to their Regulation No. 30 Operating Permit to incorporate the terms and conditions of the construction permit as provided for under Regulation No. 30, Section 7(d)(1)(v).

The Regulation 1102 application includes the following sections:

- Section 1 - Process Description: This section provides a description of all new and modified emission units, activities, control devices and raw materials. A table that lists all new emission units with their identification number is also included.

- Section 2 – Process Flow Diagrams and Plot Plan: The process flow diagrams included in this section depict all new emission units and control devices with their identification number. The locations of the new sources are included on the plot plan.

- Section 3 – Regulation 1102 Application Forms: All of the required Regulation 1102 application forms for the emission units described in Sections 1 and 2 are included in this section.

- Section 4 – Emission Calculations: This section includes potential emission calculations for all proposed new emission units.

- Section 5 – Material Safety Data Sheets: This section includes material data safety sheets for all new raw materials and products.

- Section 6 – Fees: This section includes a calculation of the required fees for this application.

SECTION 1

Process Description

Process Description

1.0 Introduction

NRG is planning to augment the air quality control systems (AQCS) for Units 3 and 4 at the Indian River Power Generating Station to meet the Consent Decree the plant has signed with the Delaware Department of Natural Resources and Environmental Control (DNREC). The air emission controls that are currently in place on Units 3 and 4 include low-NOx burners (LNB), overfire air (OFA) and selective non-catalytic reduction (SNCR) for nitrogen oxides (NOx) control; activated carbon injection (ACI) for mercury control; and electrostatic precipitators (ESP) for particulate control. To meet the more stringent air emissions limits imposed by the Consent Decree, additional air emissions controls are required to reduce sulfur dioxide (SO2) emissions, NOx emissions, and mercury (Hg) emissions.

A process description including details of all new and modified emission units, activities, control devices, material handling, and auxiliary equipment is provided in this Section 1 as part of the construction permit application. Each new activity including new emission units and insignificant activities has been assigned a unique identification number in the permit application. The identification numbers are used throughout the following process description and are depicted on the process flow diagrams included in Section 2 of this application. The locations of the new activities are depicted on a plot plan also included in Section 2.

2.0 Air Quality Control System (AQCS) Process Description

Figure 1 provides a general process flow diagram for the planned AQCS for Units 3 and 4. Both Units 3 and 4 will have a similar configuration and layout of the AQCS, varying only in the volume of flue gas handled. Downstream of the AQCS for each unit, flue gas from both units will be combined and discharged to the atmosphere via the existing Unit 4 stack. No modifications to the stack diameter, height, or location are planned. The equipment and operation of the AQCS is described briefly in following section.

2.1 NOx Control System

Currently, NOx emissions from Units 3 and 4 are controlled with a combination of LNB, OFA, and SNCR. New selective catalytic reduction (SCR) systems will be installed for both Unit 3 (ID 3) and Unit 4 (ID 4) to augment the existing NOx controls. The SCRs will be located between the economizer and the air preheater as shown in Figure 1.

The flue gas duct after the economizer will be reconfigured to allow settling and removal of large particle ash (LPA). This is necessary to avoid plugging in the catalyst beds of the SCR and consequent degradation in performance. Currently the fly ash is collected in the existing ESPs. The collected LPA and fly ash will be handled through the existing ash handling system. There will be no increase in the quantity of ash generated or handled because of this modification as this ash is currently handled by the existing ESP.

The SCR will include multiple layers of catalyst bed arranged in a honeycomb or plate structure. The flue gas temperature at the inlet of the SCR will be maintained at approximately 600 to 750 Fahrenheit (F) to achieve desired efficiency and to avoid sintering of the catalyst. Aqueous ammonia will be used as the reducing agent in the SCR. Aqueous ammonia from on-site storage tanks (ID 20) will be injected upstream of the catalyst bed atomized by air and will be distributed uniformly using banks of spray nozzles, static mixers, and distributors. The NOx removal will take place in the catalyst bed and the flue gas will flow out of the SCR to the downstream existing ESP. The system will be designed and operated to have a maximum ammonia slip of 10 ppmvd measured in the stack. Sonic horns will be provided in the SCRs to reduce accumulation of ash on the SCR walls and catalyst modules which may degrade the performance. The injection nozzles will be provided with air shields to control solids deposition and extend service intervals.

On installation of the SCR, the existing SNCR may be optionally used when needed to augment NOx control. Existing LNB and OFA systems will remain fully operational.

2.2 SO2 Control System

A circulating dry scrubber (CDS) in conjunction with pulse jet fabric filter assembly (PJFF) will be used for removal of SO2 from the flue gas for both Units 3 and 4. The CDS/PJFF system will be located downstream of the existing ESP, which will remain operational, either fully energized or partially energized as needed.

The CDS is a Dry Flue Gas Desulfurization (DFGD) process that uses hydrated lime to reduce emissions of SO2, via gas-solid phase reactions in a circulating fluidized bed. In this process, a mixture of lime from the on-site pebble lime storage system (IDs 21, 22, 23, 24, and 25) and water will be injected in the CDS system where this mixture will contact the hot flue gas from the boiler. In the CDS, the flue gas will be cooled by the evaporation of water and the hydrated lime will react with the SO2 in the flue gas. Fluidization of the solids will ensure intimate gas/solid interaction to achieve the desired control efficiency.

The treated flue gas and solids will flow out of the reactor to the downstream PJFF assembly, which consists of multiple vertically hanging cylindrical filter bags. The solids will be collected on the outer surface of the filter bags and will be removed by periodic bursts of compressed air inside the bags. Cleaned flue gas will flow from outside of the bags to the inside and then flow out of the PJFF assembly via an exhaust plenum.

Solids collected on the filter bags will be collected in the hopper/troughs below the PJFFs. An air slide at the bottom of each PJFF trough will transport the majority solids to a mixer where it will be combined with fresh hydrated lime and water, and the mixture will be re-injected into the CDS reactor. In this manner there will be a continuous recycling flow of byproduct solids through the reactor and PJFF to achieve high utilization of hydrated lime. The recycled solids include products of SO2/lime reaction (calcium sulfate and calcium sulfite), unreacted hydrated lime, spent activated carbon, and fly ash. Part of the solids collected in the PJFF will be removed from the system and transported to a new Byproduct Storage Silo (ID 26).

2.3 Particulate Matter Control System

Particulate matter will be controlled by the existing ESP in conjunction with the PJFF located downstream of the CDS. The existing ESP will remain on line and may be operated in partially energized mode because part of the fly ash will be collected in the economizer as LPA upstream of the ESP. All particulate matter out of the economizers, the ESPs, and the PJFFs will be disposed in an environmental acceptable manner.

2.4 Mercury Control System

Mercury control will be achieved by the existing ACI system. Activated carbon is currently planned to be injected at a location in the duct upstream of the existing ESP. This location may have to be revised due to addition of new AQCS. The reacted carbon will be collected in the ESP and/or the PJFF downstream of the injection point and will be part of the solids being recycled from the PJFF.

The CDS system is expected also to remove mercury from the gas stream. Though data is not available at present to determine the mercury removal efficiency, it is possible that the CDS system alone will be capable of removing the mercury to the extent required for compliance with the Consent Decree limits. If this is determined during operation of the AQCS, the ACI system may not be required to be operated.

2.5 Flue Gas Monitoring

The flue gas from Units 3 and 4 downstream of the AQCS will be combined and vented to the atmosphere via the existing Unit 4 stack at approximately 160 F. No reheat of the flue gas will be necessary. Individual continuous emission monitoring (CEM) systems for Units 3 and Unit 4 will be installed in the ductwork upstream of the common stack to record NOx, SO2 and Hg emissions.

2.6 Auxiliary Equipment

Other auxiliary equipment to be installed as part of the AQCS will include:

- Two booster fans for Unit 4 to augment the existing induced draft (ID) fans. The booster fans for Unit 4 are necessary for overcoming the additional pressure drop in the system due to addition of SCR and CDS/PJFF.

- A new ID fan for the Unit 3 AQCS system to replace the existing ID fan. This is necessary to overcome the additional pressure drop in the system due to the SCR, CDS/PJFF, and additional ducting to tie this gas stream to the Unit 4 stack.

- An emergency water pump (ID 27) for the CDS/PJFF system which will be used to inject water upstream of the CDS in case of process water failure.

- An intake air system using the Unit 3 stack with a fast acting relief damper to introduce ambient air in the Unit 3 flue gas duct in case of high vacuum in the system. This damper will only open during upset unit trip conditions allowing air to come down the existing Unit 3 stack into the Unit 3 ductwork to reduce the system vacuum. The schematic of the system in shown in Figure 1. There will be no exhaust of flue gas from this stack.

3.0 Material Unloading Storage and Handling Systems

Material unloading, storage, and handling systems for the AQCS include pebble lime, fly ash, byproduct and aqueous ammonia. These systems are described as below.

3.1 Pebble Lime Unloading, Storage and Distribution System

Figure 2 shows the schematic layout of the planned pebble lime (same as quick lime or CaO) delivery, storage, handling, and distribution system. Pebble Lime will be delivered and pneumatically unloaded by delivery trucks to the Pebble Lime Bulk Storage Silo (ID 21) common to both Units 3 and 4. The unloading system is designed for pneumatic unloading from two (2) delivery trucks simultaneously. The Pebble Lime Bulk Storage Silo will be equipped with a bin vent filter for particulate control, which will be operated during lime transfer.

Pebble lime will be discharged from the common Pebble Lime Bulk Storage Silo via an activated bin bottom and a feeder. The feeder will discharge pebble lime into a pressurized pneumatic conveying system where it will be fed to the Pebble Lime Day Silos of each of the units. Both Units 3 and 4 will have a pebble lime transport system from the common Pebble Lime Bulk Storage Silo to their respective Pebble Lime Day Silos. There will be two Pebble Lime Day Silos located adjacent to the CDS system for each unit (ID 22 and 23 for Unit 3 and ID 24 and 25 for Unit 4).

In case the Pebble Lime Bulk Storage Silo is not available for unloading for any reason, provisions will be available to pneumatically unload the pebble lime from the trucks directly to the Pebble Lime Day Silos. The Unit 3 and Unit 4 systems will be designed to pneumatically transfer the lime to one, or simultaneously to both of the two Pebble Lime Bulk Day Silos based on system level demand. All day silos will be equipped with bin vent filters for particulate control, which will be operated during lime transfer.

There will be no lime crushing, grinding, or screening operations on-site. The pebble lime from the day silos will be conveyed to hydrators/mixing equipment, where it will mixed with recycled material from the PJFFs. The mixture will be injected into the flue gas duct upstream of the CDS.

The lime transport systems will include a dedicated feed line from the Pebble Lime Storage Silo with isolation valve and feeder, transport blowers, and dedicated transport lines from the transport blowers to both of the Pebble Lime Day Silos. The hydrator/mixing equipment will be closed systems with no air emissions.

Air emissions from the system will be from the exhaust of bin vent filters on the silos mentioned above.

3.2 Fly Ash Handling System

Fly ash will be collected from the economizer and the existing ESP and will be delivered to the existing fly ash storage silo via the existing fly ash handling system. There will be no new air emission point due

to this fly ash handling. The existing Fly Ash Storage Silo is the only existing air emission point in the fly ash handling system.

3.3 Byproduct Handling, Storage, and Transfer System

Most of the solids collected in the PJFF will be recycled in the CDS to achieve high utilization of lime. Part of the solids will be removed from this closed loop system and transferred as a byproduct. The byproduct solids are expected to contain reaction products (calcium sulfate and calcium sulfite), spent lime, fly ash, spent activated carbon, and other solids collected from the flue gas stream.

Figure 3 shows the schematic layout of the byproduct handling, storage, and disposal system. Byproduct from the troughs at the bottom of both Unit 3 and 4 PJFFs will be transported pneumatically to the Byproducts Storage Silo (ID 26), common to both Units 3 and 4. The storage silo will be equipped with a bin vent filter, which will be operated during the transfer. The bottom outlet of the Byproduct Storage Silo will discharge (using a wetted pug mill as the primary method, or a dry solids unloading system as a backup system) via a telescopic chute to trucks for transport of the byproduct solids to a disposal area,.

Both Units 3 and 4 shall each have a dedicated pneumatic byproduct removal and transport system from the respective PJFF's to the common Byproducts Storage Silo. The pneumatic transport systems for Units 3 and 4 each will include transport blowers and a dedicated transport pipe line from the transport blowers through the PJFF collection points and to the Byproducts Storage Silo. Level instruments in the PJFF trough will monitor and maintain the correct level of byproduct solids in the PJFF trough. The level instruments will provide a signal to the byproduct removal system to remove byproduct, or if level is low, to proceed to the next trough.

Air emissions from the system will be from the bin vent filter exhaust on the Byproduct Storage Silo and from loading of trucks below the silo.

3.4 Ammonia Unloading, Storage and Handling System

An aqueous solution of 29% ammonia will be used as the reducing agent in the SCR for control of NOx. Figure 4 shows the schematic layout of the ammonia unloading, storage, and handling system.

Ammonia solution will be brought in the facility in trucks and stored in a common storage and handling system servicing both Units 3 and 4, which will consist of multiple horizontal, above ground atmospheric storage tanks providing storage for approximately 90,000 gallons of 29% solution of aqueous ammonia (ID 20). The tanks will be located within a secondary containment, equipped with overfill protection on level, and will be equipped with vapor pressure relief devices.

Ammonia deliveries will be by bulk tank trucks with truck mounted transfer pumps. There will be a single point of connection from the tank trucks to the storage tanks through quick disconnect coupling adapter and valve. The system will recapture all fumes vented during the offloading process with a truck mounted return vent line utilizing a quick disconnect coupling adapter. A truck transfer station will be provided.

A truck delivery apron will be designed to contain any potential spillage, which will direct any spillage to the tank containment area. A personnel protection station will be provided at the ammonia tank area with both safety eyewash and a shower.

Ammonia required for the SCRs will be pumped from the storage tanks utilizing either one of two ammonia pumps mounted on a common skid and located next to the storage tanks. Each pump will be rated for 100% ammonia supply requirement. Ammonia for injection to the SCRs will be drawn off a recirculating system between the pumps and the storage tank(s). The ammonia will be atomized by air and injected into each SCR via an ammonia injection and distribution skid located near and servicing the respective SCR reactor.

Air emissions from the system will be from the venting of ammonia vapors from the pressure relief valves on the storage tanks due to change in vapor pressure inside the tanks during operation.

TABLE 1

Indian River Generating Station
Regulation 1102 Permit Application
New and Modified Source List

Activity ID	Source Description	Activity Category	Equipment Type	Reg. 1102 Form Used
3	Boiler 3	Modified Emission Unit	Process	AQM-3.2
4	Boiler 4	Modified Emission Unit	Process	AQM-3.2
3 - Control	Boiler 3 SCR	Modified Emission Unit Control	Control	AQM-4.9
3 - Control	Boiler 3 Dry Flue Gas Desulfurization System	Modified Emission Unit Control	Control	AQM-4.6
4 - Control	Boiler 4 SCR	Modified Emission Unit Control	Control	AQM-4.9
4 - Control	Boiler 4 Dry Flue Gas Desulfurization System	Modified Emission Unit Control	Control	AQM-4.6
20	Ammonia Unloading, Storage and Handling System	New Emission Unit	Process	AQM-3.1
21	Unit 3 and 4 Pebble Lime Bulk Storage Silo	New Emission Unit	Process	AQM-3.7
21-Control	Unit 3 and 4 Pebble Lime Bulk Storage Silo Bin Vent Filter	New Emission Unit Control	Control	AQM-4.6
22	Unit 3 Pebble Lime Day Silo 1	New Emission Unit	Process	AQM-3.7
22-Control	Unit 3 Pebble Lime Day Silo 1 Bin Vent Filter	New Emission Unit Control	Control	AQM-4.6
23	Unit 3 Pebble Lime Day Silo 2	New Emission Unit	Process	AQM-3.7
23-Control	Unit 3 Pebble Lime Day Silo 2 Bin Vent Filter	New Emission Unit Control	Control	AQM-4.6
24	Unit 4 Pebble Lime Day Silo 1	New Emission Unit	Process	AQM-3.7
24-Control	Unit 4 Pebble Lime Day Silo 1 Bin Vent Filter	New Emission Unit Control	Control	AQM-4.6
25	Unit 4 Pebble Lime Day Silo 2	New Emission Unit	Process	AQM-3.7
25-Control	Unit 4 Pebble Lime Day Silo 2 Bin Vent Filter	New Emission Unit Control	Control	AQM-4.6
26	Byproduct Storage Silo and Transfer System	New Emission Unit	Process	AQM-3.7
26-Control	Byproduct Storage Silo Bin Vent Filter	New Emission Unit Control	Control	AQM-4.6
27	Emergency Diesel Quench Water Pump (252 HP)	Insignificant Activity - Reg. 1102, App. A, 33.	Process	NA

SECTION 2

Process Flow Diagrams and Plot Plan

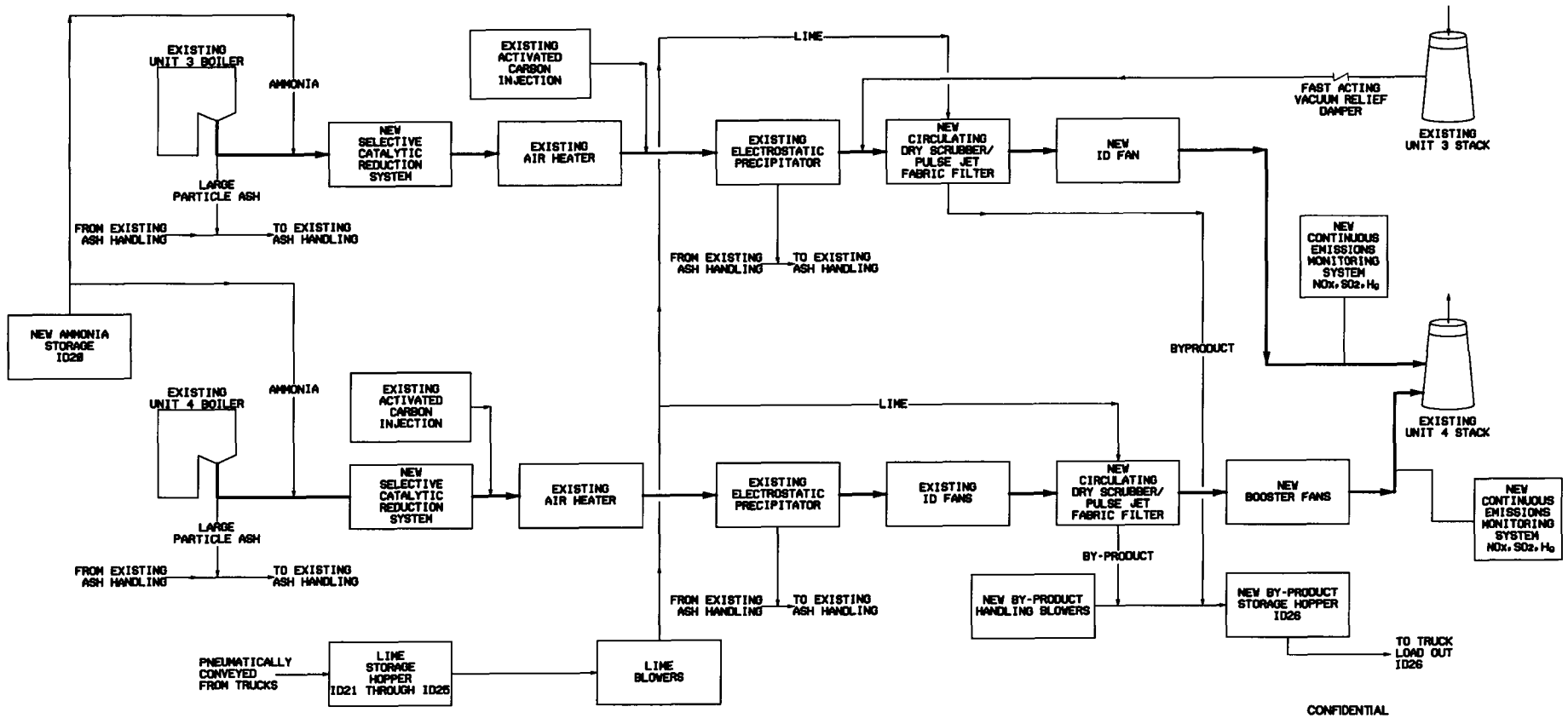

CONFIDENTIAL

THIS DOCUMENT CONTAINS PROPRIETARY INFORMATION OF SHAW AND IS TO BE RETURNED UPON REQUEST. ITS CONTENTS MAY NOT BE COPIED, DISCLOSED TO THIRD PARTIES, OR USED FOR OTHER THAN THE EXPRESS PURPOSE FOR WHICH IT HAS BEEN PROVIDED WITHOUT WRITTEN CONSENT OF SHAW.

P.E. SEAL

NRG INDIAN RIVER POWER, LLC

INDIAN RIVER AQCS PROJECT

FIGURE 1 PROCESS FLOW DIAGRAM

OVERALL PROCESS FLOW DIAGRAM

Shaw

DRAWING NO. 133414 -00000-M-PFD-004-B

ISSUE	DESCRIPTION	DRAWN BY	CHECKED	APPR	DATE
B	ISSUED FOR AIR PERMIT APPLICATION	PKD / TMH		JEH	4/15/09
A	ISSUED FOR AIR PERMIT APPLICATION	PKD / JCY / SMH		JEH	4/13/09

DRAWN | DESIGN SUPV | DATE
DESIGN | ENGR SUPV | CLIENT DRAWING NO. IR102- | REV. B
CHECK | PROJ ENGR
DISPL. ENGR | SCALE | UNLESS OTHERWISE NOTED | SH OF

CAD FILE:

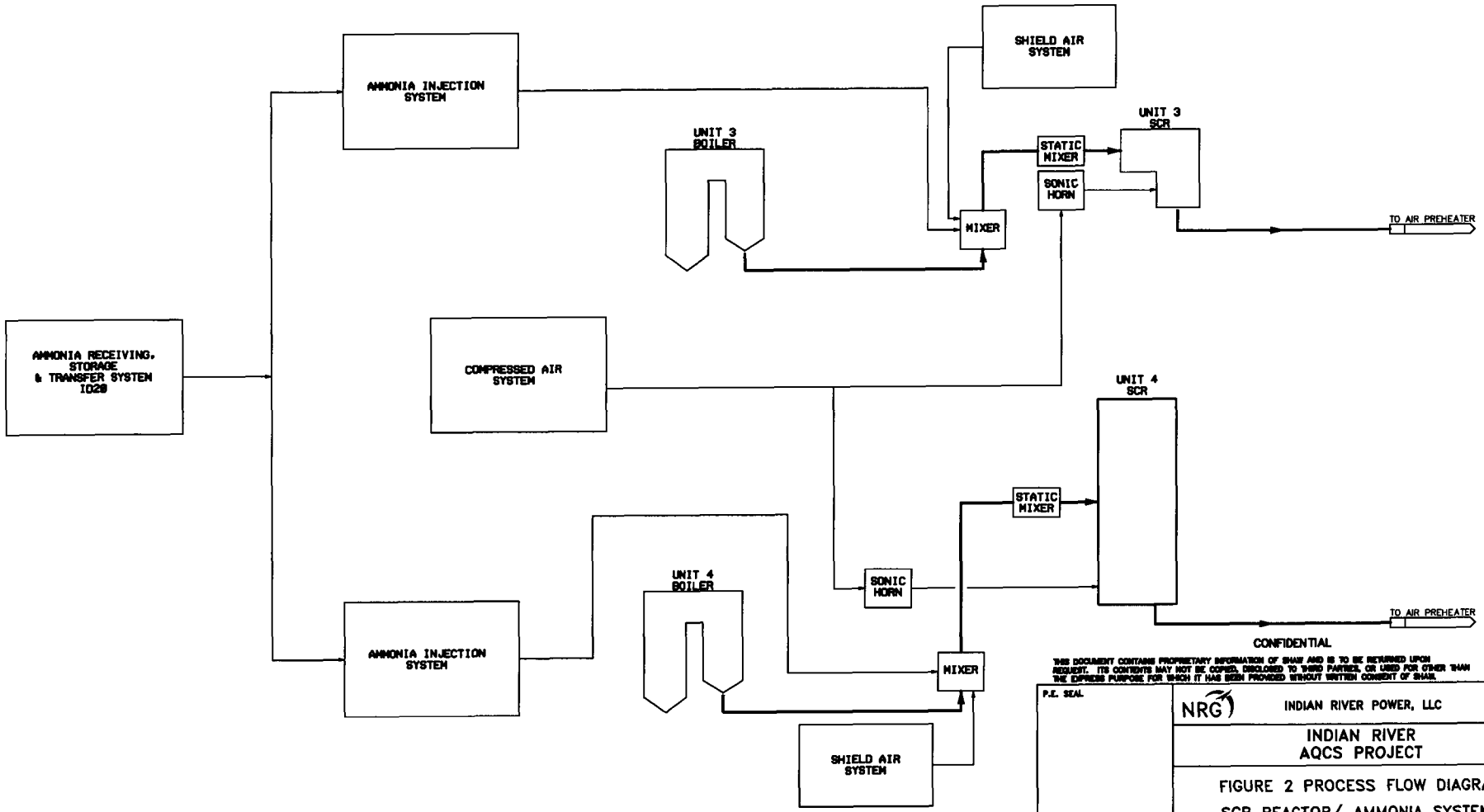

CONFIDENTIAL

THIS DOCUMENT CONTAINS PROPRIETARY INFORMATION OF SHAW AND IS TO BE RETURNED UPON REQUEST. ITS CONTENTS MAY NOT BE COPIED, DISCLOSED TO THIRD PARTIES, OR USED FOR OTHER THAN THE EXPRESS PURPOSE FOR WHICH IT HAS BEEN PROVIDED WITHOUT WRITTEN CONSENT OF SHAW.

P.E. SEAL

NRG INDIAN RIVER POWER, LLC

INDIAN RIVER AQCS PROJECT

FIGURE 2 PROCESS FLOW DIAGRAM
SCR REACTOR/ AMMONIA SYSTEMS

Shaw

DRAWING NO. 133414-00000-M-PFD-001-1-B

ISSUE	DESCRIPTION
B	ISSUED FOR PERMIT APPLICATION
A	ISSUED FOR PERMIT APPLICATION

DRAWN BY: JEH 4/23/09

DSGN | DSGN SUPV | DATE
DRWN | DRWR SUPV | CLIENT DRAWING NO. IR102- | REV. B
CHKD | PROJ ENGR
DISPL. ENGR | SCALE | UNLESS OTHERWISE NOTED | SH 1 OF 1

CAD FILE:

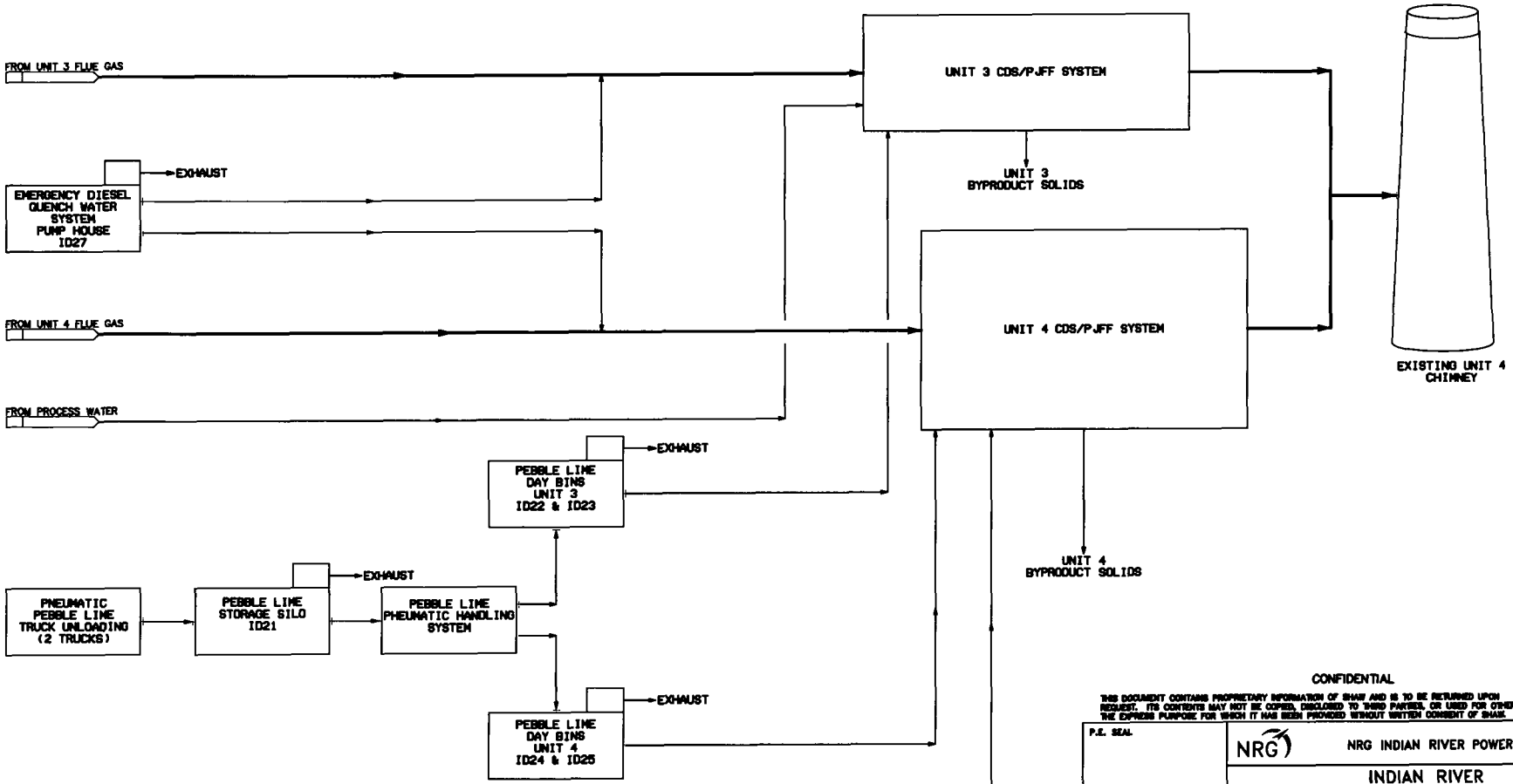

CONFIDENTIAL

THIS DOCUMENT CONTAINS PROPRIETARY INFORMATION OF SHAW AND IS TO BE RETURNED UPON REQUEST. ITS CONTENTS MAY NOT BE COPIED, DISCLOSED TO THIRD PARTIES, OR USED FOR OTHER THAN THE EXPRESS PURPOSE FOR WHICH IT HAS BEEN PROVIDED WITHOUT WRITTEN CONSENT OF SHAW.

P.E. SEAL

NRG INDIAN RIVER POWER, LLC

INDIAN RIVER AQCS PROJECT

FIGURE 3 PROCESS FLOW DIAGRAM CDS/PJFF/PEBBLE LIME SYSTEMS

DRAWING NO. 133414-00000-M-PFD-002-1-A

Shaw

ISSUE	DESCRIPTION
A	ISSUED FOR PERMIT APPLICATION

DRAWN BY	PKD
CHECKED	JCY / BMH
APPR	JEK
DATE	4/13/99

DSGN	DSGN SUPV	DATE	
DRWN	DRWN SUPV	CLIENT DRAWING NO. IR102-	REV. A
CHKD	PROJ ENGR		
DEPT. ENGR	SCALE	UNLESS OTHERWISE NOTED	SH 1 OF 1

CAD FILE

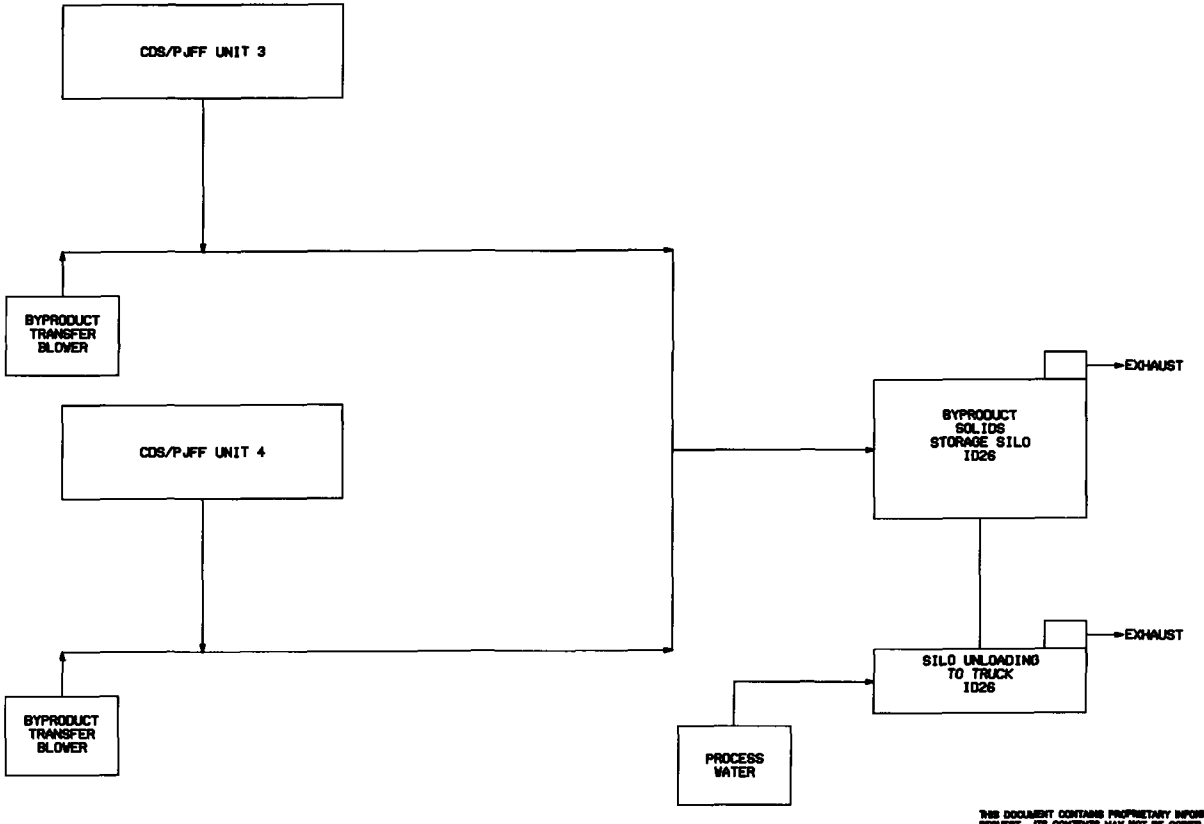

CONFIDENTIAL

THIS DOCUMENT CONTAINS PROPRIETARY INFORMATION OF SHAW AND IS TO BE RETURNED UPON REQUEST. ITS CONTENTS MAY NOT BE COPIED, DISCLOSED TO THIRD PARTIES, OR USED FOR OTHER THAN THE EXPRESS PURPOSE FOR WHICH IT HAS BEEN PROVIDED WITHOUT WRITTEN CONSENT OF SHAW.

P.E. SEAL

NRG INDIAN RIVER POWER, LLC

INDIAN RIVER
AQCS PROJECT

FIGURE 4 PROCESS FLOW DIAGRAM
BYPRODUCT HANDLING SYSTEM

Shaw

DRAWING NO. 133414-00000-M-PFD-003-1-A

ISSUE	DESCRIPTION
A	ISSUED FOR PERMIT APPLICATION

DRAWN BY: CMB
CHECKED: JCY, BMN
APPR: JEN
DATE: 4/23/08

DSGN | DSGN SUPV | DATE
DRWN | DRWN SUPV | CLIENT DRAWING NO. IR102- | REV. A
CHKD | PROJ ENGR
DISCIPL ENGR | SCALE | UNLESS OTHERWISE NOTED | SH 1 OF 1

CAD FILE:

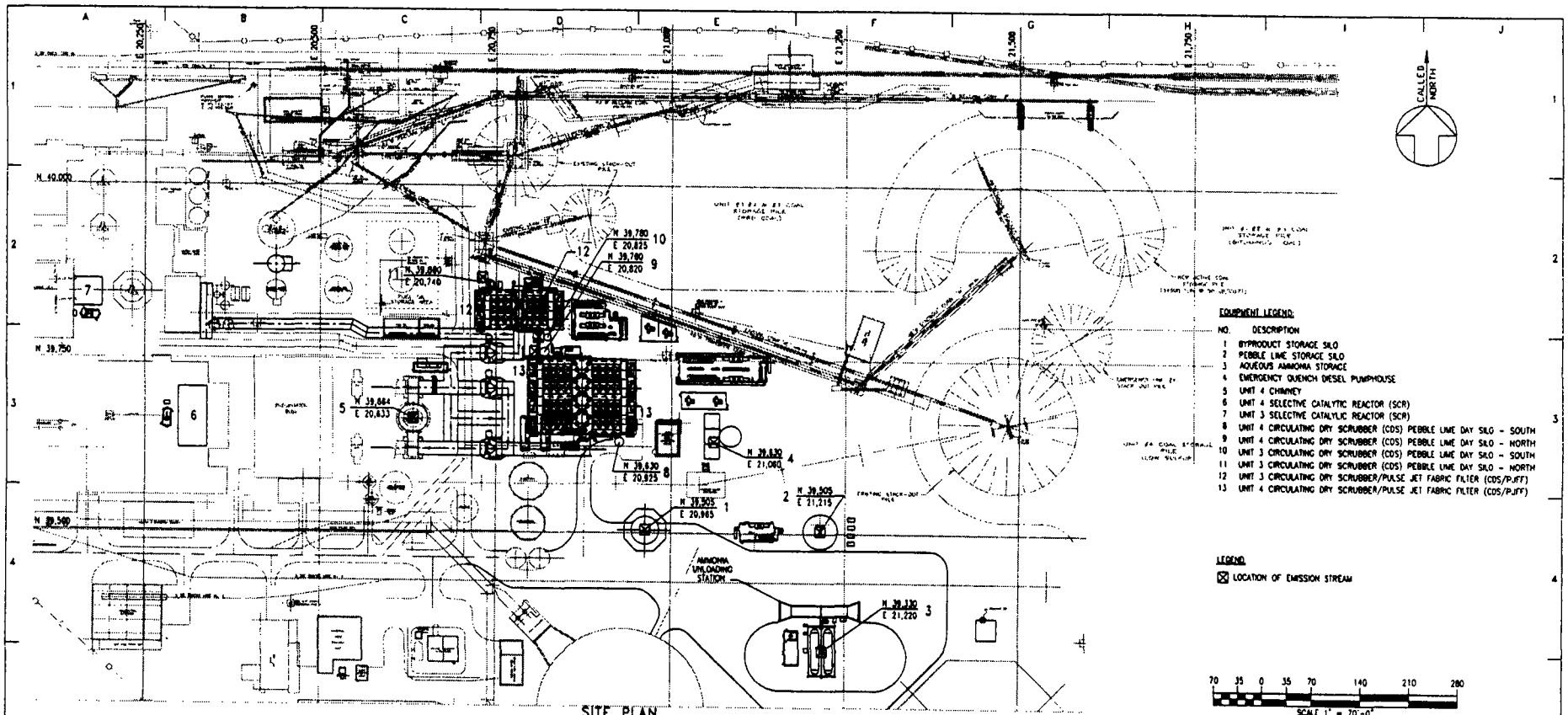

SITE PLAN

EMISSION STREAM LOCATIONS

EMISSION SOURCE NO.	EQUIPMENT NO.	DESCRIPTION	ROOF LINE (FT ABOVE GRADE)	ROOF EL. - FT (GRADE @ 9.5')
28	1	BYPRODUCT STORAGE SILO BAGHOUSE	180'	189'-6"
26	1	BYPRODUCT TRUCK LOADING	20'	29'-6"
21	2	PEBBLE LIME STORAGE SILO BAGHOUSE	110'	119'-6"
20	3	AQUEOUS AMMONIA STORAGE	36'	45'-6"
27	4	EMERGENCY QUENCH DIESEL PUMPHOUSE	18'	23'-6"
3-4	5	UNIT 4 CHIMNEY	401'-6"	411'
24	8	UNIT 4 CDS PEBBLE LIME DAY SILO BAGHOUSE - SOUTH	115'	124'-6"
23	9	UNIT 4 CDS PEBBLE LIME DAY SILO BAGHOUSE - NORTH	115'	124'-6"
22	10	UNIT 3 CDS PEBBLE LIME DAY SILO BAGHOUSE - SOUTH	85'	94'-6"
23	11	UNIT 3 CDS PEBBLE LIME DAY SILO BAGHOUSE - NORTH	85'	94'-6"

CONFIDENTIAL

THIS DOCUMENT CONTAINS PROPRIETARY INFORMATION OF SHAW AND IS TO BE RETURNED UPON REQUEST. ITS CONTENTS MAY NOT BE COPIED, DISCLOSED TO THIRD PARTIES, OR USED FOR OTHER THAN THE EXPRESS PURPOSE FOR WHICH IT HAS BEEN PROVIDED WITHOUT WRITTEN CONSENT OF SHAW

P.E. SEAL

NRG INDIAN RIVER POWER, LLC

INDIAN RIVER
AQCS PROJECT

EMISSIONS LOCATION
PLOT PLAN

Shaw

DRAWING NO. 133414-00000-M-PP-002-01-C

DSGN HWMartin	DSGN SUPV	DATE 2/25/09	
DRWN HWMartin	ENGR SUPV	CLIENT DRAWING NO. IR102-	REV C
CHKD ABrissette	PROJ ENGR		
DISP. ENGR	SCALE 1" = 70'-0"	UNLESS OTHERWISE NOTED	SH 1 OF 1

DRAWN BY	ISSUE	DESCRIPTION
HWMartin	C	ISSUED FOR AIR PERMIT APPLICATION. GENERAL REVISION
CHECKED: AB, DCY	APPR:	DATE:

DRAWN BY	ISSUE	DESCRIPTION
HWMartin	B	ISSUED FOR AIR PERMIT APPLICATION.
CHECKED: AB, DCY	APPR: BMM	DATE: 4/16/09

DRAWN BY	ISSUE	DESCRIPTION
PMD	A	ISSUED FOR CLIENT REVIEW AND AIR PERMIT APPLICATION.
CHECKED: DCY, BMM, DCT	APPR: JEM	DATE: 4/13/09

DRAWN BY	APPR	DATE
HWMartin	JEM	2/25/09

CAD FILE: Indian-River\CAD\Mech\Sketch\Mission Emissions Location\133414-00000-M-PP-002-01

SECTION 3

Regulation 1102 Application Forms

DNREC – Air Quality Management Section
Application to Construct, Operate, or Modify Stationary Sources

Administrative Information

If you are using this form electronically, press F1 at any time for help

All Application Forms Should Be Mailed To:
Air Quality Management
156 South State Street
Dover, Delaware 19901

All Checks Should Be Made Payable To:
State of Delaware

RECEIVED Date Received Stamp APR 1 7 2009 AIR QUALITY MGT.	**For Department Use Only** Assigned Permit Number

Company and Site Information

1.	Company Name: **Indian River Power LLC**		
2.	Company Mailing Address: **PO Box 408**		
	City: **Millsboro**	State: **DE**	Zip Code: **19966**
3.	Site Name: **Indian River Generating Station**		
4.	Site Mailing Address: *(if different from above)*		
	City:	State:	Zip Code:
5.	Physical Location of Site: **29416 Power Plant Road** *(if different from above)*		
	City: **Dagsboro**	State: **DE**	Zip Code: **19939**
6.	Air Quality Management Facility ID Number: **1000500001**		
7.	Site NAICS Code): *(list all that apply*		
8.	Site SIC Code: : **4911** *(list all that apply)*		
9.	Site Location Coordinates: **75.236° W, 38.586° N**		
10.	Is the Facility New or Existing?	☐ NEW	☒ EXISTING
If the Facility is an Existing Facility, Complete the Rest of Question 10. If Not, Proceed to Question 11.			
10.1.	Does the Facility Have Active Air Permits?	☒ YES	☐ NO

Company and Site Information

11. Is this Application For a New Source or Modification of an Existing Source?
☐ New Source
☒ Modification of Existing Source
☐ Other (Specify):

If the application is for the modification of an existing source, complete the rest of Question 11. If not, proceed to Question 12.

11.1. Does the Source Have an Active Air Permit? ☒ YES ☐ NO

If the source has an active air permit, complete the rest of Question 11. If not, proceed to Question 12.

11.2. Permit Number of Existing Source: **AQM-005/00001**

12. Status of Source Being Applied For: ☐ Natural Minor Source ☐ Synthetic Minor Source ☒ Major Source

13. Facility Status: ☐ Natural Minor Facility ☐ Synthetic Minor Facility ☒ Major Facility

If the source is a Major Source, complete the rest of Question 13. If not, proceed to Question 14.

13.1. Responsible Official Name: **John Robertson**

13.2. Responsible Official Title: **Indian River Responsible Official and Plant Manager**

Contact Information

14. Name of Owner or Facility Manager: **John Robertson**

15. Title of Owner or Facility Manager: **Plant Manager**

16. Permit Contact Name: **David Bacher**

17. Permit Contact Title: **Regional Environmental Manager, NRG Energy Inc.**

18. Permit Contact Telephone Number: **Office (302) 934- 3525, Cellular (302) 540 0327**

19. Permit Contact Fax Number: **(302) 934-3519**

20. Permit Contact E-Mail Address: **david.bacher@nrgenergy.com**

Proposed Operating Schedule

21. Proposed Operating Schedule: **24** hours/day **7** days/week **52** weeks/year

21.1. Is There Any Additional Information Regarding the Operating Schedule? ☐ YES ☒ NO

If YES, complete the rest of Question 21. If NO, proceed to Question 22.

21.2. Describe the Additional Information:

Coastal Zone Information

22. Is the Facility Located in the Coastal Zone? ☒ YES ☐ NO

If the facility is located in the Coastal Zone complete the rest of Question 22. If not, proceed to Question 23.

22.1. Is a Coastal Zone Permit Required for Construction or Operation of the Source Being Applied for? ☐ YES ☒ NO

Attach a copy of the Coastal Zone Determination if it has not been previously submitted

If a Coastal Zone Permit is required complete the rest of Question 22. If not, proceed to Question 23.

22.2. Has a Coastal Zone Permit Been Issued? ☐ YES ☐ NO

Attach a copy of the Coastal Zone Permit if it has not been previously submitted

Local Zoning Information

23. Parcel Zoning: **Previously submitted.**

Attach Proof of Local Zoning if it has not been previously submitted

Application Information

24. Is the Appropriate Application Fee Attached? ☒ YES ☐ NO

25. Is the Advertising Fee Attached? ☒ YES ☐ NO

Attach the appropriate fees. Note that your Application will not be considered complete if the appropriate fees are not included.

If the Facility is a New Facility complete Question 26. If not, proceed to Question 27.

26. Is a Copy of the Applicant Background Information Questionnaire on Record at the Department? ☒ YES ☐ NO

If NO, complete the rest of Question 26. If YES, process to Question 27.

26.1 Is a Copy of the Applicant Background Information Questionnaire Attached? ☐ YES ☒ NO

Attach a copy of the Applicant Background Information Questionnaire if applicable.

27. Check Which Application Forms are Attached:

☒ AQM-1	☐ AQM-3.4	☐ AQM-3.9	☐ AQM-3.14	☐ AQM-4.4	☒ AQM-4.9	☒ AQM-6
☒ AQM-2	☐ AQM-3.5	☐ AQM-3.10	☐ AQM-3.15	☐ AQM-4.5	☐ AQM-4.10	
☒ AQM-3.1	☐ AQM-3.6	☐ AQM-3.11	☐ AQM-4.1	☒ AQM-4.6	☐ AQM-4.11	
☒ AQM-3.2	☒ AQM-3.7	☐ AQM-3.12	☐ AQM-4.2	☐ AQM-4.7	☐ AQM-4.12	
☐ AQM-3.3	☐ AQM-3.8	☐ AQM-3.13	☐ AQM-4.3	☐ AQM-4.8	☒ AQM-5	

28. Check Which Documents are Attached:

- ☐ Coastal Zone Determination
- ☐ Coastal Zone Permit
- ☐ Proof of Local Zoning
- ☒ Application Fee
- ☒ Advertising Fee
- ☐ Applicant Background Information Questionnaire
- ☐ Claim of Confidentiality
- ☐ Manufacturer Specification(s)
- ☒ Material Safety Data Sheets (MSDSs)
- ☒ Supporting Calculations
- ☐ Other (Specify):

Confidentiality Information

29. Do You Consider Any of the Information Submitted With this Application Confidential? ☐ YES ☒ NO

If a Claim of Confidentiality is made it MUST meet the requirements of Section 6 of DNREC's Freedom of Information ("FOIA") Regulation at the time the Application is submitted.

Signature Block

I, the undersigned, hereby certify under penalty of law that I have personally examined and am familiar with the information submitted in this document and all of its attachments as to the truth, accuracy, and completeness of this information. I certify based on information and belief formed after reasonable inquiry, the statements and information in this document are true, accurate, and complete. By signing this form, I certify that I have not changed, altered, or deleted any portions of this application. I acknowledge that I cannot commence construction, alteration, modification or initiate operation until I receive written approval (i.e. permit, registration, or exemption letter) from the Department. I acknowledge that I may be required to perform testing of the equipment to receive construction or operation approval, and that if I do not receive approval to construct or operate that I may appeal the decision.

JOHN P. ROBERTSON
Owner or Authorized Agent

4/15/09
Date

John P. Robertson
Signature of Owner or Authorized Agent

All Application Forms Should Be Mailed To:
Air Quality Management
156 South State Street
Dover, Delaware 19901

All Checks Should Be Made Payable To:
State of Delaware

Process Flow Diagram

Sketch the Process Flow Diagram for the equipment or process being applied for. Include each emission unit and control device (even existing emission units that will not be modified by this application). You may identify each emission unit with a simple shape. Label each emission unit and control device with a unique identifier. Show the relationship between each emission unit and/or control device by drawing arrows between them to indicate the flow of air pollutants. List which application forms are included for each emission unit or control device below the shape representing each emission unit or control device. See http://www.delaware.gov/reg2/default.htm for example Process Flow Diagrams for common processes. If you already have a Process Flow Diagram for the equipment or process being applied for, you may attach it to the application instead of using this form.

See Process Flow Diagrams in Section 2 of this application.

DNREC – Air Quality Management Section
Application to Construct, Operate, or Modify Stationary Sources

Boiler Application

APC. 81/0600-C.A8

If you are using this form electronically, press F1 at any time for help

General Information

1.	Facility Name: **Indian River Generating Station**
2.	Equipment ID: **ID 3 Unit 3**
3.	Manufacturer: **Babcock and Wilcox**
4.	Model: **Natural circulation, radiant, reheat, balanced draft type boiler**
5.	Serial Number: **Not available**
6.	Rated Heat Input: **1904** MMBTU/hr
7.	Maximum Power Output: **165,000 kilowatt**
8.	Date of Manufacture: **1970**
9.	Date of Installation: **1970**
10.	Primary Fuel: ☐ Natural Gas ☐ Diesel ☐ No. 2 Fuel Oil ☐ No. 4 Fuel Oil ☐ No. 6 Fuel Oil ☐ Propane ☐ Biodiesel ☐ Refinery Fuel Gas ☐ Waste Oil ☒ Other (specify): **coal**
10.1.	Maximum Annual Primary Fuel Consumption: **683,567 ton**
10.2.	Heat Content of Primary Fuel: **12,200 (avg.) BTU/lb**
10.3.	Maximum Firing Rate: **156,066 lbs/hr**
10.4.	Percent Sulfur of Primary Fuel: **0.5-3** %
10.5.	Percent Ash of Primary Fuel: **8-13** %
11.	Secondary Fuel: ☐ Natural Gas ☐ Diesel ☒ No. 2 Fuel Oil ☐ No. 4 Fuel Oil ☐ No. 6 Fuel Oil ☐ Propane ☐ Biodiesel ☐ Refinery Fuel Gas ☐ Waste Oil ☐ Other (specify):
11.1.	Maximum Annual Secondary Fuel Consumption: **123,548,444 gal**
11.2.	Heat Content of Secondary Fuel: **135,000 (avg.) BTU/gal**
11.3.	Maximum Firing Rate: **14,104 gallons/hr**
11.4.	Percent Sulfur of Secondary Fuel: **0.3 (avg.)** %
11.5.	Percent Ash of Secondary Fuel: **0.01 (avg.)** %

Control Device Information

12. Is a Low NO_X Burner Used?	☒ YES ☐ NO
If a Low NO_X Burner is used, complete the rest of Question 12. If not, proceed to Question 13.	
12.1. NO_X Emissions from Burner in Parts Per Million (ppm): **See Emission Calcs - Sec. 4**	
13. Is Flue Gas Recirculation Used?	☐ YES ☒ NO
If Flue Gas Recirculation is used, complete the rest of Question 13. If not, proceed to Question 14.	
13.1. Percentage of Flue Gas Recirculated: **%**	
14. Are Any Other Control Devices Used?	☒ YES ☐ NO
If YES, complete the rest of Question 14. If NO, proceed to Question 15.	
14.1. Is a Fabric Collector or Baghouse Used?	☒ YES ☐ NO
If YES, complete Form AQM-4.6 and attach it to this application.	
14.2. Is an Electrostatic Precipitator Used?	☒ YES ☐ NO
If YES, complete Form AQM-4.7 and attach it to this application.	
14.3. Is a Venturi Scrubber Used?	☐ YES ☒ NO
If YES, complete Form AQM-4.8 and attach it to this application.	
14.4. Is SCR/NSCR/SNCR/Ammonia Injection Used?	☒ YES ☐ NO
If YES, complete Form AQM-4.9 and attach it to this application.	
14.5. Is Any Other Control Device Used?	☒ YES ☐ NO
If YES, attach a copy of the Control Device Manufacturer's Specification Sheet(s).	
If any other control device is used, complete the rest of Question 14. If not, proceed to Question 15.	
14.6. Describe Control Device: **Circulating Dry Scrubber (CDS) - See Process Description. Additionally, optional, need-based Activated Carbon Injection (ACI) (applied for in a previous Reg. 1102 application).**	
14.7. Pollutants Controlled: ☐ VOCs ☐ HAPs ☐ PM ☐ PM_{10} ☐ $PM_{2.5}$ ☐ NO_X ☒ SO_X ☐ Metals ☒ Other (Specify): **Hg**	
14.8. Control Device Manufacturer: **TBD**	
14.9. Control Device Model: **NA**	
14.10. Control Device Serial Number: **NA**	
14.11. Control Device Design Capacity: **2,650,000 lb/hr inlet gas flow**	
14.12. Control Device Removal or Destruction Efficiency: **See Emission Calcs - Section 4**	

Ash Handling Information

15. Is Ash Handling Equipment Used?	☒ YES ☐ NO
If Yes, Attach the Ash Handling Equipment Manufacturer's Specification Sheets	

Ash Handling Information

If Ash Handling Equipment is used, complete the rest of Question 15. If not, proceed to Question 16.

15.1. Type of Ash Handling System:
- ☒ Pneumatic
- ☐ Hydraulic
- ☐ Mechanical
- ☐ Other (Explain):

15.2. Ash Generation Rate: **No change from Title V Permit**

15.3. Ash Storage Containment System:
- ☒ Storage Silos
- ☐ Settling Basin
- ☐ Trucked Off Site
- ☐ Other (Explain):

Soot Blowing Information

16. Is Soot Blowing Conducted? ☒ YES ☐ NO

If Soot Blowing is conducted, complete the rest of Question 16. If not, proceed to Question 17.

16.1. Projected Frequency of Soot Blowing Operation: **No change from Title V Permit**

16.2. Projected Duration of Soot Blowing Operation: **No change from Title V Permit**

16.3. Projected Time of Day Soot Blowing Is Conducted: **No change from Title V Permit**

Stack Information

17. How Does the Process Equipment Vent:
(check all that apply)
- ☐ Directly to the Atmosphere
- ☒ Through a Control Device Covered by Forms AQM-4.1 through 4.12
- ☐ Through Another Control Device Described on This Form

If any of the process equipment vents directly to the atmosphere or through another control device described on this form, proceed to Question 18. If the process equipment vents through a control device, provide the stack parameters on the control device form (AQM-4 Series) and proceed to Question 19.

18. Emission Point Name:

18.1. Stack Height Above Grade: **feet**

18.2. Stack Exit Diameter: **feet**
(Provide Stack Dimensions If Rectangular Stack)

18.3. Is a Stack Cap Present? ☐ YES ☐ NO

18.4. Stack Configuration: ☐ Vertical ☐ Horizontal ☐ Downward-Venting
(check all that apply) ☐ Other (Specify):

18.5. Stack Exit Gas Temperature: **°F**

18.6. Stack Exit Gas Flow Rate: **ACFM**

18.7. Distance to Nearest Property Line: **ft**

Stack Information

18.8. Describe Nearest Obstruction:

18.9. Height of Nearest Obstruction: **ft**

18.10. Distance to Nearest Obstruction: **ft**

18.11. Are Stack Sampling Ports Provided? ☐ YES ☐ NO

Monitoring Information

19. Will Emissions Data be Recorded by a Continuous Emission Monitoring System? ☒ YES ☐ NO

If Yes, Attach a Copy of the Continuous Emission Monitoring System Manufacturer's Specification Sheets

If YES, complete the rest of Question 19. If NO, proceed to Question 20.

19.1. Pollutants Monitored: ☐ VOCs ☐ HAPs ☐ PM ☐ PM_{10} ☐ $PM_{2.5}$ ☒ NO_X ☒ SO_X ☐ Metals
☒ Other (Specify): **Hg**

19.2. Describe the Continuous Emission Monitoring System: **TBD**

19.3. Manufacturer: **TBD**

19.4. Model: **TBD**

19.5. Serial Number: **TBD**

19.6. Will Multiple Emission Units Be Monitored at the Same Point? ☐ YES ☒ NO

If YES, complete the rest of Question 19. If NO, proceed to Question 20.

19.7. Emission Units Monitored:

19.8. Will More Than One Emission Unit be Emitting From the Combined Point At Any Time? ☐ YES ☐ NO

If YES, complete the rest of Question 19. If NO, proceed to Question 20.

19.9. Emission Units Emitting Simultaneously:

Visible Emissions Monitoring Information

For Primary Fuel

20. Proposed Technique Used to Monitor Visible Emissions:
☒ Opacity Monitor (COM)
☐ Manual (Method 9)
☐ Manual (Method 22)
☐ Other (Describe):

If an Opacity Monitor (COM) is used, complete the rest of Question 20. If not, proceed to Question 21.

20.1. Describe the Continuous Opacity Monitoring System: **TBD**

20.2. Manufacturer: **TBD**

20.3. Model: **TBD**

Visible Emissions Monitoring Information

20.4. Serial Number: **TBD**

21. Proposed Frequency of Opacity Monitoring: **TBD**

For Secondary Fuel. If no Secondary Fuel is used, proceed to Question 24.

22. Proposed Technique Used to Monitor Visible Emissions:
- ☒ Opacity Monitor (COMs)
- ☐ Manual (Method 9)
- ☐ Manual (Method 22)
- ☐ Other (Describe):

If an Opacity Monitor (COMs) is used, complete the rest of Question 22. If not, proceed to Question 23.

22.1. Describe the Continuous Opacity Monitoring System: **TBD**

22.2. Manufacturer: **TBD**

22.3. Model: **TBD**

22.4. Serial Number: **TBD**

23. Proposed Frequency of Opacity Monitoring: **TBD**

Monitoring and Alarm Information

24. Are There Any Alarms You Would Like the Department to Consider When Drafting the Permit? ☐ YES ☒ NO

If YES, complete the rest of Question 24. If NO, proceed to Question 25.

24.1. Describe the System Alarm(s):

If there are more than five alarms, attach additional copies of this page as needed.

	Operating Parameter Monitored	Describe Alarm Trigger	Monitoring Device or Alarm Type	Does the Alarm Initiate an Automated Response?
24.1.1.			☐ Visual ☐ Auditory ☐ Automatic (Remote Monitoring) ☐ Other	☐ NO ☐ YES Describe:
24.1.2.			☐ Visual ☐ Auditory ☐ Automatic (Remote Monitoring) ☐ Other	☐ NO ☐ YES Describe:
24.1.3.			☐ Visual ☐ Auditory ☐ Automatic (Remote Monitoring) ☐ Other	☐ NO ☐ YES Describe:

Monitoring and Alarm Information

24.1.4.			☐ Visual ☐ Auditory ☐ Automatic (Remote Monitoring) ☐ Other	☐ NO ☐ YES Describe:
24.1.5.			☐ Visual ☐ Auditory ☐ Automatic (Remote Monitoring) ☐ Other	☐ NO ☐ YES Describe:

Emissions Information

25. Do You Plan to Take Any Emission Limitations to Avoid Major Source Status, Minor New Source Review, MACT, NSPS, etc.? ☐ YES ☒ NO

If YES, complete the rest of Question 25. If NO, proceed to Question 26.

25.1. Describe Any Proposed Emission Limitations:

Operating Information

26. Do You Plan to Take Any Operating Limitations to Avoid Major Source Status, Minor New Source Review, MACT, NSPS, etc.? ☐ YES ☒ NO

If YES, complete the rest of Question 26. If NO, proceed to Question 27.

26.1. Describe Any Proposed Operating Limitations:

27. Do You Plan to Operate Differently During Ozone Season? ☐ YES ☒ NO

If YES, complete the rest of Question 27. If NO, proceed to Question 28.

27.1. Describe Any Differences In Operation During Ozone Season:

Additional Information

28. Is There Any Additional Information Pertinent to this Application? ☒ YES ☐ NO

If YES, complete the rest of Question 28.

28.1. Describe: **The selective catalytic reduction (SCR) system is a well-proven technology employed in numerous coal-fired power plants in the USA and worldwide with a history of successful removal of nitrogen oxides (NOx) from flue gas. The SCR process requires a flue gas minimum operating temperature (MOT) typically between 580 F and 620 F, depending on sulfur dioxide concentration**

Additional Information

in the flue gas, before the ammonia can react efficiently with the NOx in the flue gas, for conversion to N2 and H2O. The MOT is also needed to avoid the potential for the formation of solid depositions in the air heater, consisting of ammonium bi-sulfate (ABS) material, which can lead to corrosion and pluggage of the airheaters. For these reasons the ammonia is not fed to the SCR system until the SCR reactor is operating at the MOT. Since these optimum SCR operating temperatures are not achieved for several hours during cold or warm unit startup, control of NOx emissions is limited during these hours and consistently meeting the 24-hour rolling average is being evaluated. NRG is currently working with Shaw and an industry leading SCR supplier to evaluate options and determine whether a technical solution is available to consistently achieve the 24-hour rolling average NOx emission limit inclusive of unit startup. Achieving the 24-hour NOx emission limit throughout normal unit operation and shutdown is not an issue.

Selective Catalytic Reduction (SCR), Selective Non-Catalytic Reduction (SNCR), Non-Selective Catalytic Reduction (NSCR), and Ammonia Injection Application

If you are using this form electronically, press F1 at any time for help

General Information

1. Facility Name: **Indian River Generating Station**
2. Equipment ID Number: **ID 3 Selective Catalytic Reduction System**
3. Manufacturer: **TBD**
4. Model: **TBD**
5. Serial Number: **TBD**
6. Type:
   - ☒ Selective Catalytic Reduction
   - ☐ Selective Non-Catalytic Reduction
   - ☐ Non-Selective Catalytic Reduction
   - ☐ Ammonia Injection

Attach the Manufacturer's Specification Sheet.

Contaminant Information

7. Concentration of Each Contaminant in the Waste Gas and Removal Efficiency

If more than five Contaminants are present, attach additional copies of this page as needed.

	Contaminant	CAS Number	Concentration in Waste Gas	Removal Efficiency
7.1.	**NOx**		**% by Weight**	**73 (avg.) %**
7.2.			**% by Weight**	%
7.3.			**% by Weight**	%
7.4.			**% by Weight**	%
7.5.			**% by Weight**	%

Gas Stream Information

8. Maximum Inlet Volumetric Gas Flow Rate: **886,600 acfm** at **606 °F**
9. Maximum Outlet Volumetric Gas Flow Rate: **903,300 acfm** at **606 °F**
10. Pressure Drop: **9 inches water**

Operational Information

11. Design Operating Temperature: 600-750 **°F**

Operational Information

12. Ammonia/Urea Slip: **10** ppm

13. Method of Determining Slip: ☐ Continuous Emissions Monitor ☒ Stack Test ☐ Manufacturer's Specifications ☐ Other (Specify):

14. Describe the Operating Conditions that are Monitored to Determine the Reducing Agent Injection Rate: **Gas temperature and inlet NOx concentration**

15. Describe the Process Controls for Proper Mixing of the Reducing Agent in the Gas Stream: **Injection nozzles and static mixers**

16. Operating Temperature Range for Catalyst: From **600 °F** To **750 °F**

17. Describe the Oxidation Catalyst Used: **TBD**

18. Design Service Life of Catalyst: ***~17,000 operating hours***

19. Describe Reducing Agent Used: **Aqueous ammonia**

20. Expected Usage Rate of Reducing Agent: **3,350 tons/year**

21. Expected Concentration of Reducing Agent: **29%**

Attach justification for the Expected Usage Rate and Concentration of the Reducing Agent.

22. Describe How Spent Catalyst is Treated or Disposed of: **Disposed off-site**

If SNCR is used complete Question 23. If not, proceed to Question 24.

23. Describe How Frequently the System is Optimized:

Stack Information

24. Emission Point Name: **Stack Information on Baghouse Application Form**

24.1. Stack Height Above Grade: **feet**

24.2. Stack Exit Diameter: **feet**
(Provide Stack Dimensions If Rectangular Stack)

24.3. Is a Stack Cap Present? ☐ YES ☐ NO

24.4. Stack Configuration: ☐ Vertical ☐ Horizontal ☐ Downward-Venting
(check all that apply) ☐ Other (Specify):

24.5. Stack Exit Gas Temperature: **°F**

24.6. Stack Exit Gas Flow Rate: **ACFM**

24.7. Distance to Nearest Property Line: **feet**

24.8. Describe Nearest Obstruction:

24.9. Height of Nearest Obstruction: **feet**

24.10. Distance to Nearest Obstruction: **feet**

Stack Information

24.11. Are Stack Sampling Ports Provided? ☐ YES ☐ NO

Monitoring and Alarm Information

25. Are There Any Alarms You Would Like the Department to Consider When Drafting the Permit? ☐ YES ☒ NO

If YES, complete the rest of Question 25. If NO, proceed to Question 26.

25.1. Describe the System Alarm(s):

If there are more than five alarms, attach additional copies of this page as needed.

	Operating Parameter Monitored	Describe Alarm Trigger	Monitoring Device or Alarm Type	Does the Alarm Initiate an Automated Response?
25.1.1.			☐ Visual ☐ Auditory ☐ Automatic (Remote Monitoring) ☐ Other	☐ NO ☐ YES Describe:
25.1.2.			☐ Visual ☐ Auditory ☐ Automatic (Remote Monitoring) ☐ Other	☐ NO ☐ YES Describe:
25.1.3.			☐ Visual ☐ Auditory ☐ Automatic (Remote Monitoring) ☐ Other	☐ NO ☐ YES Describe:
25.1.4.			☐ Visual ☐ Auditory ☐ Automatic (Remote Monitoring) ☐ Other	☐ NO ☐ YES Describe:
25.1.5.			☐ Visual ☐ Auditory ☐ Automatic (Remote Monitoring) ☐ Other	☐ NO ☐ YES Describe:

Additional Information

26. Is There Any Additional Information Pertinent to this Application? ☐ YES ☒ NO

If YES, complete the rest of Question 26.

26.1. Describe:

Baghouse Application

If you are using this form electronically, press F1 at any time for help

General Information

1.	Facility Name: **Indian River Generating Station**
2.	Equipment ID Number: **ID 3 Fabric Filter Assembly**
3.	Manufacturer: **TBD**
4.	Model: **TBD**
5.	Serial Number: **NA**
6.	Is the Baghouse Insulated? ☒ YES ☐ NO
7.	Design Minimum Operating Temperature: **160 °F**
8.	Design Maximum Operating Temperature: **180 °F**
9.	Are Temperature Controls Provided? ☐ YES ☒ NO
If Yes, complete the rest of Question 9. If no, proceed to Question 10.	
9.1.	Describe the Temperature Controls:
10.	Air Flow Through Baghouse: ☐ Forced ☒ Induced ☐ Other (Specify):
11.	Direction of Flow Through Filters: ☐ Inside Out ☒ Outside In
12.	Particulate Removal Efficiency: **NA** %
Attach the Manufacturer's Specification Sheet for the Baghouse and Particle Size Removal Efficiency Curve and basis of determination.	

Compartment Information

13.	Number of Compartments: **TBD**
14.	Number of Filters (Bags) Per Compartment: **TBD**
15.	Can the Compartments be Isolated for Replacement or Repair? ☒ YES ☐ NO

Gas Stream Information

16.	Maximum Inlet Volumetric Gas Flow Rate: **850,000 acfm at 310 °F**
17.	Maximum Outlet Volumetric Gas Flow Rate: **790,000 acfm at 160 °F**
18.	Dew Point at Maximum Moisture Content of Gas: **130 °F**

Gas Stream Information

19. pH of Gas Handled: **NA (air)**

20. Dust Characteristics: (Check All That Apply)
- ☐ Sticky
- ☐ Wet
- ☐ Corrosive
- ☒ Dry
- ☐ Other (Specify):

Contaminant Information

21. Percent of Each Contaminant in the Waste Gas and Removal Efficiency

If more than five Contaminants are present, attach additional copies of this page as needed.

	Contaminant Name	Contaminant CAS Number	Percent of Waste Gas	Removal Efficiency
21.1.	**PM/PM-10**		**%**	**NA** %
21.2.			%	%
21.3.			%	%
21.4.			%	%
21.5.			%	%

Fabric Filter (Bag) Information

22. Fabric Type:
- ☐ Felted
- ☐ Woven
- ☐ Felted-Woven
- ☐ Membrane
- ☐ PTFE Membrane
- ☐ Sintered Metal
- ☐ Ceramic Cartridge
- ☒ Other (Specify): **TBD**

23. Fabric Material: **TBD**

24. Maximum Continuous Filter Operating Temperature: **200 °F**

25. Clean Fabric Permeability: **TBD** scfm/ft^2 at ΔP inches of water

26. Fabric Filter (Bag) Diameter or Width: **TBD inches**

27. Fabric Filter (Bag) Length: **TBD inches**

28. Effective Area Per Filter: **TBD) square feet**

29. Minimum Effective Air to Cloth Ratio: 3.0:1 (estimated-will depend on final design) **feet**

30. Maximum Effective Air to Cloth Ratio: 4.0:1 (estimated-will depend on final design) **feet**

31. Design Pressure Drop Across Baghouse: 17 (estimated-will depend on final design) **inches water**

32. Describe Determining Factor Fabric Filter Changing/Replacement: **Based on visual inspection of filter bags and/or differential pressure.**

Attach the Manufacturer's Specification Sheet for the Fabric Filters (Bags).

Filter Cleaning Information

33. Filter Cleaning Method: ☐ Manual Cleaning ☐ Bag Collapse ☐ Reverse Air Jet ☐ Mechanical Shakers ☐ Sonic Cleaning ☒ Pulse Jet ☐ Pneumatic Shakers ☐ Reverse Air Flow ☐ Other (Specify):

If Reverse Air Jet or Pulse Jet is used, complete the rest of Question 33. If not, proceed to Question 34.

33.1. Air Pressure: 60-120 (estimated) **psi**

33.2. Describe How Air Is Supplied to System: **From facility compressed air line**

34. Describe How Filter Cleaning Is Initiated: ☐ Manual ☒ Pressure Drop ☐ Timer ☐ Other (Specify):

Hopper Information

35. Is the Hopper Heated? ☒ YES ☐ NO

36. Is there a Hopper Vibrator? ☐ YES ☒ NO

37. Describe How Collected Material is Treated or Disposed of: **Transferred to the new byproduct storage silo and disposed to a landfill.**

Stack Information

38. Emission Point Name: **Units 3 and 4 Common Stack**

38.1. Stack Height Above Grade: **400 feet**

38.2. Stack Exit Diameter: **24 feet**
(Provide Stack Dimensions If Rectangular Stack)

38.3. Is a Stack Cap Present? ☐ YES ☒ NO

38.4. Stack Configuration: ☒ Vertical ☐ Horizontal ☐ Downward-Venting
(check all that apply) ☐ Other (Specify):

38.5. Stack Exit Gas Temperature: **160 °F**

38.6. Stack Exit Gas Flow Rate: **Total for Units 3 and 4: 2,905,000 ACFM**

38.7. Distance to Nearest Property Line: **500 feet**

38.8. Describe Nearest Obstruction: **Byproduct Storage Silo**

38.9. Height of Nearest Obstruction: **180 feet**

38.10. Distance to Nearest Obstruction: **250 feet**

Stack Information

38.11. Are Stack Sampling Ports Provided? ☒ YES ☐ NO

Monitoring and Alarm Information

39. Are There Any Alarms You Would Like the Department to Consider When Drafting the Permit? ☐ YES ☒ NO

If YES, complete the rest of Question 39. If NO, proceed to Question 40.

39.1. Describe the System Alarm(s):

If there are more than five alarms, attach additional copies of this page as needed.

	Operating Parameter Monitored	Describe Alarm Trigger	Monitoring Device or Alarm Type	Does the Alarm Initiate an Automated Response?
39.1.1.			☐ Visual ☐ Auditory ☐ Automatic (Remote Monitoring) ☐ Other	☐ NO ☐ YES Describe:
39.1.2.			☐ Visual ☐ Auditory ☐ Automatic (Remote Monitoring) ☐ Other	☐ NO ☐ YES Describe:
39.1.3.			☐ Visual ☐ Auditory ☐ Automatic (Remote Monitoring) ☐ Other	☐ NO ☐ YES Describe:
39.1.4.			☐ Visual ☐ Auditory ☐ Automatic (Remote Monitoring) ☐ Other	☐ NO ☐ YES Describe:
39.1.5.			☐ Visual ☐ Auditory ☐ Automatic (Remote Monitoring) ☐ Other	☐ NO ☐ YES Describe:

Additional Information

40. Is There Any Additional Information Pertinent to this Application? ☐ YES ☒ NO

If YES, complete the rest of Question 40.

40.1. Describe:

Boiler Application

APC-52/0149-C-97

If you are using this form electronically, press F1 at any time for help

General Information

1.	Facility Name: **Indian River Generating Station**
2.	Equipment ID: **ID 4 Unit 4**
3.	Manufacturer: **Riley Stoker**
4.	Model: **Dry bottom "Turbo Furnace" steam boiler**
5.	Serial Number: **Not available**
6.	Rated Heat Input: **5,091** MMBTU/hr
7.	Maximum Power Output: **420,000 kilowatt**
8.	Date of Manufacture: **1980**
9.	Date of Installation: **1980**
10.	Primary Fuel: ☐ Natural Gas ☐ Diesel ☐ No. 2 Fuel Oil ☐ No. 4 Fuel Oil ☐ No. 6 Fuel Oil ☐ Propane ☐ Biodiesel ☐ Refinery Fuel Gas ☐ Waste Oil ☒ Other (specify): **coal**
10.1.	Maximum Annual Primary Fuel Consumption: **1,827,752 ton**
10.2.	Heat Content of Primary Fuel: **12,200 (avg.) BTU/lb**
10.3.	Maximum Firing Rate: **417,295 lbs/hr**
10.4.	Percent Sulfur of Primary Fuel: **0.5-3 (avg.)** %
10.5.	Percent Ash of Primary Fuel: **8-13 (avg.)** %
11.	Secondary Fuel: ☐ Natural Gas ☐ Diesel ☒ No. 2 Fuel Oil ☐ No. 4 Fuel Oil ☐ No. 6 Fuel Oil ☐ Propane ☐ Biodiesel ☐ Refinery Fuel Gas ☐ Waste Oil ☐ Other (specify):
11.1.	Maximum Annual Secondary Fuel Consumption: **330,349,333 gal**
11.2.	Heat Content of Secondary Fuel: **135,000 (avg.) BTU/gal**
11.3.	Maximum Firing Rate: **37,711 gallons/hr**
11.4.	Percent Sulfur of Secondary Fuel: **0.3 (avg.)** %
11.5.	Percent Ash of Secondary Fuel: **0.01 (avg.)** %

Control Device Information

12.	Is a Low NO_X Burner Used? ☒ YES ☐ NO
If a Low NO_X Burner is used, complete the rest of Question 12. If not, proceed to Question 13.	
12.1.	NO_X Emissions from Burner in Parts Per Million (ppm): **See Emission Calcs. - Section 4**
13.	Is Flue Gas Recirculation Used? ☐ YES ☒ NO
If Flue Gas Recirculation is used, complete the rest of Question 13. If not, proceed to Question 14.	
13.1.	Percentage of Flue Gas Recirculated: **%**
14.	Are Any Other Control Devices Used? ☒ YES ☐ NO
If YES, complete the rest of Question 14. If NO, proceed to Question 15.	
14.1.	Is a Fabric Collector or Baghouse Used? ☒ YES ☐ NO
If YES, complete Form AQM-4.6 and attach it to this application.	
14.2.	Is an Electrostatic Precipitator Used? ☒ YES ☐ NO
If YES, complete Form AQM-4.7 and attach it to this application.	
14.3.	Is a Venturi Scrubber Used? ☐ YES ☒ NO
If YES, complete Form AQM-4.8 and attach it to this application.	
14.4.	Is SCR/NSCR/SNCR/Ammonia Injection Used? ☒ YES ☐ NO
If YES, complete Form AQM-4.9 and attach it to this application.	
14.5.	Is Any Other Control Device Used? ☒ YES ☐ NO
If YES, attach a copy of the Control Device Manufacturer's Specification Sheet(s).	
If any other control device is used, complete the rest of Question 14. If not, proceed to Question 15.	
14.6.	Describe Control Device: **Circulating Dry Scrubber (CDS) - See Process Description. Additionally, optional, need-based Activated Carbon Injection (ACI) (applied for in a previous Reg. 1102 application).**
14.7.	Pollutants Controlled: ☐ VOCs ☐ HAPs ☐ PM ☐ PM_{10} ☐ $PM_{2.5}$ ☐ NO_X ☒ SO_X ☐ Metals ☒ Other (Specify): **Hg**
14.8.	Control Device Manufacturer:
14.9.	Control Device Model: **NA**
14.10.	Control Device Serial Number: **NA**
14.11.	Control Device Design Capacity: **7,050,000 lbs/hr inlet gas flow**
14.12.	Control Device Removal or Destruction Efficiency: **See Emission Calcs. - Section 4**

Ash Handling Information

15.	Is Ash Handling Equipment Used? ☒ YES ☐ NO
If Yes, Attach the Ash Handling Equipment Manufacturer's Specification Sheets	

Ash Handling Information

If Ash Handling Equipment is used, complete the rest of Question 15. If not, proceed to Question 16.

15.1. Type of Ash Handling System: ☒ Pneumatic
☐ Hydraulic
☐ Mechanical
☐ Other (Explain):

15.2. Ash Generation Rate: **No change from Title V permit**

15.3. Ash Storage Containment System: ☒ Storage Silos
☐ Settling Basin
☐ Trucked Off Site
☐ Other (Explain):

Soot Blowing Information

16. Is Soot Blowing Conducted? ☒ YES ☐ NO

If Soot Blowing is conducted, complete the rest of Question 16. If not, proceed to Question 17.

16.1. Projected Frequency of Soot Blowing Operation: **No change from Title V permit**

16.2. Projected Duration of Soot Blowing Operation: **No change from Title V permit**

16.3. Projected Time of Day Soot Blowing Is Conducted: **No change from Title V permit**

Stack Information

17. How Does the Process Equipment Vent:
(check all that apply)
☐ Directly to the Atmosphere
☒ Through a Control Device Covered by Forms AQM-4.1 through 4.12
☐ Through Another Control Device Described on This Form

If any of the process equipment vents directly to the atmosphere or through another control device described on this form, proceed to Question 18. If the process equipment vents through a control device, provide the stack parameters on the control device form (AQM-4 Series) and proceed to Question 19.

18. Emission Point Name:

18.1. Stack Height Above Grade: **feet**

18.2. Stack Exit Diameter: **feet**
(Provide Stack Dimensions If Rectangular Stack)

18.3. Is a Stack Cap Present? ☐ YES ☐ NO

18.4. Stack Configuration: ☐ Vertical ☐ Horizontal ☐ Downward-Venting
(check all that apply) ☐ Other (Specify):

18.5. Stack Exit Gas Temperature: **°F**

18.6. Stack Exit Gas Flow Rate: **ACFM**

18.7. Distance to Nearest Property Line: **ft**

Stack Information

18.8. Describe Nearest Obstruction:	
18.9. Height of Nearest Obstruction: **ft**	
18.10. Distance to Nearest Obstruction: **ft**	
18.11. Are Stack Sampling Ports Provided?	☐ YES ☐ NO

Monitoring Information

19. Will Emissions Data be Recorded by a Continuous Emission Monitoring System?	☒ YES ☐ NO
If Yes, Attach a Copy of the Continuous Emission Monitoring System Manufacturer's Specification Sheets	
If YES, complete the rest of Question 19. If NO, proceed to Question 20.	
19.1. Pollutants Monitored: ☐ VOCs ☐ HAPs ☐ PM ☐ PM_{10} ☐ $PM_{2.5}$ ☒ NO_X ☒ SO_X ☐ Metals ☒ Other (Specify): **Hg**	
19.2. Describe the Continuous Emission Monitoring System: **TBD**	
19.3. Manufacturer: **TBD**	
19.4. Model: **TBD**	
19.5. Serial Number: **TBD**	
19.6. Will Multiple Emission Units Be Monitored at the Same Point?	☐ YES ☒ NO
If YES, complete the rest of Question 19. If NO, proceed to Question 20.	
19.7. Emission Units Monitored:	
19.8. Will More Than One Emission Unit be Emitting From the Combined Point At Any Time?	☐ YES ☐ NO
If YES, complete the rest of Question 19. If NO, proceed to Question 20.	
19.9. Emission Units Emitting Simultaneously:	

Visible Emissions Monitoring Information

For Primary Fuel	
20. Proposed Technique Used to Monitor Visible Emissions:	☒ Opacity Monitor (COM) ☐ Manual (Method 9) ☐ Manual (Method 22) ☐ Other (Describe):
If an Opacity Monitor (COM) is used, complete the rest of Question 20. If not, proceed to Question 21.	
20.1. Describe the Continuous Opacity Monitoring System: **TBD**	
20.2. Manufacturer: **TBD**	
20.3. Model: **TBD**	

Visible Emissions Monitoring Information

20.4. Serial Number: **TBD**

21. Proposed Frequency of Opacity Monitoring: **TBD**

For Secondary Fuel. If no Secondary Fuel is used, proceed to Question 24.

22. Proposed Technique Used to Monitor Visible Emissions:
- ☒ Opacity Monitor (COMs)
- ☐ Manual (Method 9)
- ☐ Manual (Method 22)
- ☐ Other (Describe):

If an Opacity Monitor (COMs) is used, complete the rest of Question 22. If not, proceed to Question 23.

22.1. Describe the Continuous Opacity Monitoring System: **TBD**

22.2. Manufacturer: **TBD**

22.3. Model: **TBD**

22.4. Serial Number: **TBD**

23. Proposed Frequency of Opacity Monitoring: **TBD**

Monitoring and Alarm Information

24. Are There Any Alarms You Would Like the Department to Consider When Drafting the Permit? ☐ YES ☒ NO

If YES, complete the rest of Question 24. If NO, proceed to Question 25.

24.1. Describe the System Alarm(s):

If there are more than five alarms, attach additional copies of this page as needed.

	Operating Parameter Monitored	Describe Alarm Trigger	Monitoring Device or Alarm Type	Does the Alarm Initiate an Automated Response?
24.1.1.			☐ Visual ☐ Auditory ☐ Automatic (Remote Monitoring) ☐ Other	☐ NO ☐ YES Describe:
24.1.2.			☐ Visual ☐ Auditory ☐ Automatic (Remote Monitoring) ☐ Other	☐ NO ☐ YES Describe:
24.1.3.			☐ Visual ☐ Auditory ☐ Automatic (Remote Monitoring) ☐ Other	☐ NO ☐ YES Describe:

Monitoring and Alarm Information

24.1.4.			☐ Visual ☐ Auditory ☐ Automatic (Remote Monitoring) ☐ Other	☐ NO ☐ YES Describe:
24.1.5.			☐ Visual ☐ Auditory ☐ Automatic (Remote Monitoring) ☐ Other	☐ NO ☐ YES Describe:

Emissions Information

25. Do You Plan to Take Any Emission Limitations to Avoid Major Source Status, Minor New Source Review, MACT, NSPS, etc.? ☐ YES ☒ NO

If YES, complete the rest of Question 25. If NO, proceed to Question 26.

25.1. Describe Any Proposed Emission Limitations:

Operating Information

26. Do You Plan to Take Any Operating Limitations to Avoid Major Source Status, Minor New Source Review, MACT, NSPS, etc.? ☐ YES ☒ NO

If YES, complete the rest of Question 26. If NO, proceed to Question 27.

26.1. Describe Any Proposed Operating Limitations:

27. Do You Plan to Operate Differently During Ozone Season? ☐ YES ☒ NO

If YES, complete the rest of Question 27. If NO, proceed to Question 28.

27.1. Describe Any Differences In Operation During Ozone Season:

Additional Information

28. Is There Any Additional Information Pertinent to this Application? ☒ YES ☐ NO

If YES, complete the rest of Question 28.

28.1. Describe: **The selective catalytic reduction (SCR) system is a well-proven technology employed in numerous coal-fired power plants in the USA and worldwide with a history of successful removal of nitrogen oxides (NOx) from flue gas. The SCR process requires a flue gas minimum operating temperature (MOT) typically between 580 F and 620 F, depending on sulfur dioxide concentration**

Additional Information

in the flue gas, before the ammonia can react efficiently with the NOx in the flue gas, for conversion to N2 and H2O. The MOT is also needed to avoid the potential for the formation of solid depositions in the air heater, consisting of ammonium bi-sulfate (ABS) material, which can lead to corrosion and pluggage of the airheaters. For these reasons the ammonia is not fed to the SCR system until the SCR reactor is operating at the MOT. Since these optimum SCR operating temperatures are not achieved for several hours during cold or warm unit startup, control of NOx emissions is limited during these hours and consistently meeting the 24-hour rolling average is being evaluated. NRG is currently working with Shaw and an industry leading SCR supplier to evaluate options and determine whether a technical solution is available to consistently achieve the 24-hour rolling average NOx emission limit inclusive of unit startup. Achieving the 24-hour NOx emission limit throughout normal unit operation and shutdown is not an issue.

Selective Catalytic Reduction (SCR), Selective Non-Catalytic Reduction (SNCR), Non-Selective Catalytic Reduction (NSCR), and Ammonia Injection Application

If you are using this form electronically, press F1 at any time for help

General Information

1. Facility Name: **Indian River Generating Station**
2. Equipment ID Number: **ID 4 Selective Catalytic Reduction System**
3. Manufacturer: **TBD**
4. Model: **TBD**
5. Serial Number: **TBD**
6. Type:
   - ☒ Selective Catalytic Reduction
   - ☐ Selective Non-Catalytic Reduction
   - ☐ Non-Selective Catalytic Reduction
   - ☐ Ammonia Injection

Attach the Manufacturer's Specification Sheet.

Contaminant Information

7. Concentration of Each Contaminant in the Waste Gas and Removal Efficiency

If more than five Contaminants are present, attach additional copies of this page as needed.

	Contaminant	CAS Number	Concentration in Waste Gas	Removal Efficiency
7.1.	**NOx**		**% by Weight**	**76 (avg.)** %
7.2.			**% by Weight**	%
7.3.			**% by Weight**	%
7.4.			**% by Weight**	%
7.5.			**% by Weight**	%

Gas Stream Information

8. Maximum Inlet Volumetric Gas Flow Rate: **2,312,800 acfm** at **610 °F**
9. Maximum Outlet Volumetric Gas Flow Rate: **2,359,000 acfm** at **610 °F**
10. Pressure Drop: **9 inches water**

Operational Information

11. Design Operating Temperature: 600-750 **°F**

Operational Information

12. Ammonia/Urea Slip: **10** ppm

13. Method of Determining Slip: ☐ Continuous Emissions Monitor ☒ Stack Test ☐ Manufacturer's Specifications ☐ Other (Specify):

14. Describe the Operating Conditions that are Monitored to Determine the Reducing Agent Injection Rate: **Gas temperature and inlet NOx concentration**

15. Describe the Process Controls for Proper Mixing of the Reducing Agent in the Gas Stream: **Injection nozzles and static mixers**

16. Operating Temperature Range for Catalyst: From **600 °F** To **750 °F**

17. Describe the Oxidation Catalyst Used: **TBD**

18. Design Service Life of Catalyst: **~17,000 operating hours**

19. Describe Reducing Agent Used: **Aqueous ammonia**

20. Expected Usage Rate of Reducing Agent: **10,446 tons/year**

21. Expected Concentration of Reducing Agent: **29%**

Attach justification for the Expected Usage Rate and Concentration of the Reducing Agent.

22. Describe How Spent Catalyst is Treated or Disposed of: **Disposed off-site**

If SNCR is used complete Question 23. If not, proceed to Question 24.

23. Describe How Frequently the System is Optimized:

Stack Information

24. Emission Point Name: **Stack Information on Baghouse Application Form**

24.1. Stack Height Above Grade: **feet**

24.2. Stack Exit Diameter: **feet**
(Provide Stack Dimensions If Rectangular Stack)

24.3. Is a Stack Cap Present? ☐ YES ☐ NO

24.4. Stack Configuration: ☐ Vertical ☐ Horizontal ☐ Downward-Venting
(check all that apply) ☐ Other (Specify):

24.5. Stack Exit Gas Temperature: **°F**

24.6. Stack Exit Gas Flow Rate: **ACFM**

24.7. Distance to Nearest Property Line: **feet**

24.8. Describe Nearest Obstruction:

24.9. Height of Nearest Obstruction: **feet**

24.10. Distance to Nearest Obstruction: **feet**

Stack Information

24.11. Are Stack Sampling Ports Provided? ☐ YES ☐ NO

Monitoring and Alarm Information

25. Are There Any Alarms You Would Like the Department to Consider When Drafting the Permit? ☐ YES ☒ NO

If YES, complete the rest of Question 25. If NO, proceed to Question 26.

25.1. Describe the System Alarm(s):

If there are more than five alarms, attach additional copies of this page as needed.

	Operating Parameter Monitored	Describe Alarm Trigger	Monitoring Device or Alarm Type	Does the Alarm Initiate an Automated Response?
25.1.1.			☐ Visual ☐ Auditory ☐ Automatic (Remote Monitoring) ☐ Other	☐ NO ☐ YES Describe:
25.1.2.			☐ Visual ☐ Auditory ☐ Automatic (Remote Monitoring) ☐ Other	☐ NO ☐ YES Describe:
25.1.3.			☐ Visual ☐ Auditory ☐ Automatic (Remote Monitoring) ☐ Other	☐ NO ☐ YES Describe:
25.1.4.			☐ Visual ☐ Auditory ☐ Automatic (Remote Monitoring) ☐ Other	☐ NO ☐ YES Describe:
25.1.5.			☐ Visual ☐ Auditory ☐ Automatic (Remote Monitoring) ☐ Other	☐ NO ☐ YES Describe:

Additional Information

26. Is There Any Additional Information Pertinent to this Application? ☐ YES ☒ NO

If YES, complete the rest of Question 26.

26.1. Describe:

Baghouse Application

If you are using this form electronically, press F1 at any time for help

General Information

1.	Facility Name: **Indian River Generating Station**
2.	Equipment ID Number: **ID 4 Fabric Filter Assembly**
3.	Manufacturer: **TBD**
4.	Model: **TBD**
5.	Serial Number: **NA**
6.	Is the Baghouse Insulated? ☒ YES ☐ NO
7.	Design Minimum Operating Temperature: **160 °F**
8.	Design Maximum Operating Temperature: **180 °F**
9.	Are Temperature Controls Provided? ☐ YES ☒ NO
If Yes, complete the rest of Question 9. If no, proceed to Question 10.	
9.1.	Describe the Temperature Controls:
10.	Air Flow Through Baghouse: ☐ Forced ☒ Induced ☐ Other (Specify):
11.	Direction of Flow Through Filters: ☐ Inside Out ☒ Outside In
12.	Particulate Removal Efficiency: **99.7 (avg.)** %
Attach the Manufacturer's Specification Sheet for the Baghouse and Particle Size Removal Efficiency Curve and basis of determination.	

Compartment Information

13.	Number of Compartments: **TBD**
14.	Number of Filters (Bags) Per Compartment: **TBD**
15.	Can the Compartments be Isolated for Replacement or Repair? ☒ YES ☐ NO

Gas Stream Information

16.	Maximum Inlet Volumetric Gas Flow Rate: **2,074,300 acfm at 290 °F**
17.	Maximum Outlet Volumetric Gas Flow Rate: **1,940,000 acfm at 160 °F**
18.	Dew Point at Maximum Moisture Content of Gas: **130 °F**

Gas Stream Information

19. pH of Gas Handled: **NA (air)**

20. Dust Characteristics: (Check All That Apply)
- ☐ Sticky
- ☐ Wet
- ☐ Corrosive
- ☒ Dry
- ☐ Other (Specify):

Contaminant Information

21. Percent of Each Contaminant in the Waste Gas and Removal Efficiency

If more than five Contaminants are present, attach additional copies of this page as needed.

	Contaminant Name	Contaminant CAS Number	Percent of Waste Gas	Removal Efficiency
21.1.	**PM**		%	**99.7 (avg.)** %
21.2.			%	%
21.3.			%	%
21.4.			%	%
21.5.			%	%

Fabric Filter (Bag) Information

22. Fabric Type:
- ☐ Felted
- ☐ Woven
- ☐ Felted-Woven
- ☐ Membrane
- ☐ PTFE Membrane
- ☐ Sintered Metal
- ☐ Ceramic Cartridge
- ☒ Other (Specify): **TBD**

23. Fabric Material: **TBD**

24. Maximum Continuous Filter Operating Temperature: **200 °F**

25. Clean Fabric Permeability: **TBD** scfm/ft^2 at ΔP inches of water

26. Fabric Filter (Bag) Diameter or Width: **TBD inches**

27. Fabric Filter (Bag) Length: **TBD inches**

28. Effective Area Per Filter: **TBD square feet**

29. Minimum Effective Air to Cloth Ratio: 3.2:1 (estimated-will depend on final design) **feet**

30. Maximum Effective Air to Cloth Ratio: 3.2:1 (estimated-will depend on final design) **feet**

31. Design Pressure Drop Across Baghouse: 17 (estimated-will depend on final design) **inches water**

32. Describe Determining Factor Fabric Filter Changing/Replacement: **Based on visual inspection of filter bags and/or differential pressure.**

Attach the Manufacturer's Specification Sheet for the Fabric Filters (Bags).

Filter Cleaning Information

33. Filter Cleaning Method: ☐ Manual Cleaning ☐ Mechanical Shakers ☐ Pneumatic Shakers ☐ Bag Collapse ☐ Sonic Cleaning ☐ Reverse Air Flow ☐ Reverse Air Jet ☒ Pulse Jet ☐ Other (Specify):

If Reverse Air Jet or Pulse Jet is used, complete the rest of Question 33. If not, proceed to Question 34.

33.1. Air Pressure: 60-120 (estimated) **psi**

33.2. Describe How Air Is Supplied to System: **From facility compressed air line**

34. Describe How Filter Cleaning Is Initiated: ☐ Manual ☐ Timer ☒ Pressure Drop ☐ Other (Specify):

Hopper Information

35. Is the Hopper Heated? ☒ YES ☐ NO

36. Is there a Hopper Vibrator? ☐ YES ☒ NO

37. Describe How Collected Material is Treated or Disposed of: **Transferred to the new byproduct storage silo and disposed to an on-site or off-site landfill.**

Stack Information

38. Emission Point Name: **Units 3 and 4 Common Stack**

38.1. Stack Height Above Grade: **400 feet**

38.2. Stack Exit Diameter: **24 feet**
(Provide Stack Dimensions If Rectangular Stack)

38.3. Is a Stack Cap Present? ☐ YES ☒ NO

38.4. Stack Configuration: ☒ Vertical ☐ Horizontal ☐ Downward-Venting
(check all that apply) ☐ Other (Specify):

38.5. Stack Exit Gas Temperature: **160 °F**

38.6. Stack Exit Gas Flow Rate: **Unit 3 and 4 Total: 2,660,000 ACFM**

38.7. Distance to Nearest Property Line: **500 feet**

38.8. Describe Nearest Obstruction: **Byproduct Storage Silo**

38.9. Height of Nearest Obstruction: **180 feet**

38.10. Distance to Nearest Obstruction: **250 feet**

Stack Information

38.11. Are Stack Sampling Ports Provided? ☒ YES ☐ NO

Monitoring and Alarm Information

39. Are There Any Alarms You Would Like the Department to Consider When Drafting the Permit? ☐ YES ☒ NO

If YES, complete the rest of Question 39. If NO, proceed to Question 40.

39.1. Describe the System Alarm(s):

If there are more than five alarms, attach additional copies of this page as needed.

	Operating Parameter Monitored	Describe Alarm Trigger	Monitoring Device or Alarm Type	Does the Alarm Initiate an Automated Response?
39.1.1.			☐ Visual ☐ Auditory ☐ Automatic (Remote Monitoring) ☐ Other	☐ NO ☐ YES Describe:
39.1.2.			☐ Visual ☐ Auditory ☐ Automatic (Remote Monitoring) ☐ Other	☐ NO ☐ YES Describe:
39.1.3.			☐ Visual ☐ Auditory ☐ Automatic (Remote Monitoring) ☐ Other	☐ NO ☐ YES Describe:
39.1.4.			☐ Visual ☐ Auditory ☐ Automatic (Remote Monitoring) ☐ Other	☐ NO ☐ YES Describe:
39.1.5.			☐ Visual ☐ Auditory ☐ Automatic (Remote Monitoring) ☐ Other	☐ NO ☐ YES Describe:

Additional Information

40. Is There Any Additional Information Pertinent to this Application? ☐ YES ☒ NO

If YES, complete the rest of Question 40.

40.1. Describe:

Emissions Information Application

If you are using this form electronically, press F1 at any time for help

Process Information

1.	Number of Individual Pieces of Process Equipment in Process: **2**
2.	Number of Individual Control Devices in Process: **1**

Emissions Information for First Emission Point/Stack

3.	Emission Point Name: **Unit 3 and 4 Common Stack**
4.	Equipment ID Number for all Process Equipment and Control Devices Venting Through Emission Point/Stack: **Emission Units 3 and 4**
5.	Pollutant Emissions

If more than 18 pollutants are emitted at this Emission Point/Stack, attach additional copies of this page as needed.

	Pollutant Name (Specify VOCs and HAPs Individually in 5.10 through 5.18)	CAS Number (Not required for 5.1 through 5.9)	Maximum Uncontrolled Emission Rate at Design Capacity	Maximum Controlled Emission Rate at Design Capacity	Annual Potential to Emit (PTE)	Expected Annual Emissions
5.1.	Particulate Matter (PM)		**1,080 lbs/hour**	**525 lbs/hour**	**2,298** tons/year	**2,298** tons/year
5.2.	PM_{10}		**1,080 lbs/hour**	**525 lbs/hour**	**2,298** tons/year	**2,298** tons/year
5.3.	$PM_{2.5}$		**1,080 lbs/hour**	**525 lbs/hour**	**2,298** tons/year	**2,298** tons/year
5.4.	Sulfur Oxides (SO_X)		**31,478 lbs/hour**	**1,400 lbs/hour**	**6,128** tons/year	**6,128** tons/year
5.5.	Nitrogen Oxides (NO_X)		**2,843 lbs/hour**	**700 lbs/hour**	**3,064** tons/year	**3,064** tons/year
5.6.	Carbon Monoxide (CO)		**lbs/hour**	**lbs/hour**	tons/year	tons/year
5.7.	Lead		**lbs/hour**	**lbs/hour**	tons/year	tons/year
5.8.	Total Volatile Organic Compounds (VOCs)		**lbs/hour**	**lbs/hour**	tons/year	tons/year

Emissions Information for First Emission Point/Stack

5.9.	Total Hazardous Air Pollutants (HAPs)		**lbs/hour**	**lbs/hour**	tons/year	tons/year
5.10.	**Hg**	**7439-97-6**	**0.042 lbs/hour**	**0.004 lbs/hour**	**0.01** tons/year	**0.01** tons/year
5.11.	**NH3**	**7664-41-7**	**86 lbs/hour**	**57 lbs/hour**	**250** tons/year	**250** tons/year
5.12.			**lbs/hour**	**lbs/hour**	tons/year	tons/year
5.13.			**lbs/hour**	**lbs/hour**	tons/year	tons/year
5.14.			**lbs/hour**	**lbs/hour**	tons/year	tons/year
5.15.			**lbs/hour**	**lbs/hour**	tons/year	tons/year
5.16.			**lbs/hour**	**lbs/hour**	tons/year	tons/year
5.17			**lbs/hour**	**lbs/hour**	tons/year	tons/year
5.18.			**lbs/hour**	**lbs/hour**	tons/year	tons/year

6. Provide Any Additional Information Necessary to Understanding the Emission Rates Provided Above:

Attach the Basis of Determination or Calculations for each Emission Rate provided above.

Emissions Information for Second Emission Point/Stack

7. Emission Point Name:

8. Equipment ID Number for all Process Equipment and Control Devices Venting Through Emission Point/Stack:

9. Pollutant Emissions

If more than 18 pollutants are emitted at this Emission Point/Stack, attach additional copies of this page as needed.

Pollutant Name (Specify VOCs and HAPs Individually in 9.10 through 9.18)	CAS Number (Not required for 9.1 through 9.9)	Maximum Uncontrolled Emission Rate at Design Capacity	Maximum Controlled Emission Rate at Design Capacity	Annual Potential to Emit (PTE)	Expected Annual Emissions

Emissions Information for Second Emission Point/Stack

9.1.	Particulate Matter (PM)		**lbs/hour**	**lbs/hour**	tons/year	tons/year
9.2.	PM_{10}		**lbs/hour**	**lbs/hour**	tons/year	tons/year
9.3.	$PM_{2.5}$		**lbs/hour**	**lbs/hour**	tons/year	tons/year
9.4.	Sulfur Oxides (SO_X)		**lbs/hour**	**lbs/hour**	tons/year	tons/year
9.5.	Nitrogen Oxides (NO_X)		**lbs/hour**	**lbs/hour**	tons/year	tons/year
9.6.	Carbon Monoxide (CO)		**lbs/hour**	**lbs/hour**	tons/year	tons/year
9.7.	Lead		**lbs/hour**	**lbs/hour**	tons/year	tons/year
9.8.	Total Volatile Organic Compounds (VOCs)		**lbs/hour**	**lbs/hour**	tons/year	tons/year
9.9.	Total Hazardous Air Pollutants (HAPs)		**lbs/hour**	**lbs/hour**	tons/year	tons/year
9.10.			**lbs/hour**	**lbs/hour**	tons/year	tons/year
9.11.			**lbs/hour**	**lbs/hour**	tons/year	tons/year
9.12.			**lbs/hour**	**lbs/hour**	tons/year	tons/year
9.13.			**lbs/hour**	**lbs/hour**	tons/year	tons/year
9.14.			**lbs/hour**	**lbs/hour**	tons/year	tons/year
9.15.			**lbs/hour**	**lbs/hour**	tons/year	tons/year
9.16.			**lbs/hour**	**lbs/hour**	tons/year	tons/year
9.17			**lbs/hour**	**lbs/hour**	tons/year	tons/year
9.18.			**lbs/hour**	**lbs/hour**	tons/year	tons/year

10. Provide Any Additional Information Necessary to Understanding the Emission Rates Provided Above:

Attach the Basis of Determination or Calculations for each Emission Rate provided above.

Emissions Information for Third Emission Point/Stack

11. Emission Point Name:

12. Equipment ID Number for all Process Equipment and Control Devices Venting Through Emission Point/Stack:

13. Pollutant Emissions

If more than 18 pollutants are emitted at this Emission Point/Stack, attach additional copies of this page as needed.

	Pollutant Name (Specify VOCs and HAPs Individually in 13.10 through 13.18)	CAS Number (Not required for 13.1 through 13.9)	Maximum Uncontrolled Emission Rate at Design Capacity	Maximum Controlled Emission Rate at Design Capacity	Annual Potential to Emit (PTE)	Expected Annual Emissions
13.1.	Particulate Matter (PM)		**lbs/hour**	**lbs/hour**	tons/year	tons/year
13.2.	PM_{10}		**lbs/hour**	**lbs/hour**	tons/year	tons/year
13.3.	$PM_{2.5}$		**lbs/hour**	**lbs/hour**	tons/year	tons/year
13.4.	Sulfur Oxides (SO_X)		**lbs/hour**	**lbs/hour**	tons/year	tons/year
13.5.	Nitrogen Oxides (NO_X)		**lbs/hour**	**lbs/hour**	tons/year	tons/year
13.6.	Carbon Monoxide (CO)		**lbs/hour**	**lbs/hour**	tons/year	tons/year
13.7.	Lead		**lbs/hour**	**lbs/hour**	tons/year	tons/year
13.8.	Total Volatile Organic Compounds (VOCs)		**lbs/hour**	**lbs/hour**	tons/year	tons/year
13.9.	Total Hazardous Air Pollutants (HAPs)		**lbs/hour**	**lbs/hour**	tons/year	tons/year
13.10.			**lbs/hour**	**lbs/hour**	tons/year	tons/year
13.11.			**lbs/hour**	**lbs/hour**	tons/year	tons/year
13.12.			**lbs/hour**	**lbs/hour**	tons/year	tons/year
13.13.			**lbs/hour**	**lbs/hour**	tons/year	tons/year
13.14.			**lbs/hour**	**lbs/hour**	tons/year	tons/year

Emissions Information for Third Emission Point/Stack

13.15.		**lbs/hour**	**lbs/hour**	tons/year	tons/year
13.16.		**lbs/hour**	**lbs/hour**	tons/year	tons/year
13.17		**lbs/hour**	**lbs/hour**	tons/year	tons/year
13.18.		**lbs/hour**	**lbs/hour**	tons/year	tons/year

14. Provide Any Additional Information Necessary to Understanding the Emission Rates Provided Above:

Attach the Basis of Determination or Calculations for each Emission Rate provided above.

Emissions Information for Fourth Emission Point/Stack

15. Emission Point Name:

16. Equipment ID Number for all Process Equipment and Control Devices Venting Through Emission Point/Stack:

17. Pollutant Emissions

If more than 18 pollutants are emitted at this Emission Point/Stack, attach additional copies of this page as needed.

	Pollutant Name (Specify VOCs and HAPs Individually in 17.10 through 17.18)	CAS Number (Not required for 17.1 through 17.9)	Maximum Uncontrolled Emission Rate at Design Capacity	Maximum Controlled Emission Rate at Design Capacity	Annual Potential to Emit (PTE)	Expected Annual Emissions
17.1.	Particulate Matter (PM)		**lbs/hour**	**lbs/hour**	tons/year	tons/year
17.2.	PM_{10}		**lbs/hour**	**lbs/hour**	tons/year	tons/year
17.3.	$PM_{2.5}$		**lbs/hour**	**lbs/hour**	tons/year	tons/year
17.4.	Sulfur Oxides (SO_X)		**lbs/hour**	**lbs/hour**	tons/year	tons/year
17.5.	Nitrogen Oxides (NO_X)		**lbs/hour**	**lbs/hour**	tons/year	tons/year
17.6.	Carbon Monoxide (CO)		**lbs/hour**	**lbs/hour**	tons/year	tons/year

Emissions Information for Fourth Emission Point/Stack

17.7.	Volatile Organic Compounds (VOCs)		lbs/hour	lbs/hour	tons/year	tons/year
17.8.	Lead		lbs/hour	lbs/hour	tons/year	tons/year
17.9.			lbs/hour	lbs/hour	tons/year	tons/year
17.10.			lbs/hour	lbs/hour	tons/year	tons/year
17.11.			lbs/hour	lbs/hour	tons/year	tons/year
17.12.			lbs/hour	lbs/hour	tons/year	tons/year
17.13.			lbs/hour	lbs/hour	tons/year	tons/year
17.14.			lbs/hour	lbs/hour	tons/year	tons/year
17.15.			lbs/hour	lbs/hour	tons/year	tons/year
17.16.			lbs/hour	lbs/hour	tons/year	tons/year
17.17			lbs/hour	lbs/hour	tons/year	tons/year
17.18.			lbs/hour	lbs/hour	tons/year	tons/year

18. Provide Any Additional Information Necessary to Understanding the Emission Rates Provided Above:

Attach the Basis of Determination or Calculations for each Emission Rate provided above.

If there are more than four Emission Points/Stacks, attach additional copies of this form as needed.

Overall Process Emissions

19. Pollutant Emissions

If more than 18 pollutants are emitted from this Process, attach additional copies of this page as needed.

Pollutant Name (Specify VOCs and HAPs Individually in 19.10 through 19.18)	CAS Number (Not required for 19.1 through 19.9)	Maximum Uncontrolled Emission Rate at Design Capacity	Maximum Controlled Emission Rate at Design Capacity	Annual Potential to Emit (PTE)	Expected Annual Emissions

Overall Process Emissions

19.1.	Particulate Matter (PM)		**1,080 lbs/hour**	**525 lbs/hour**	**3,064** tons/year	**3,064** tons/year
19.2.	PM_{10}		**1,080 lbs/hour**	**525 lbs/hour**	**3,064** tons/year	**3,064** tons/year
19.3.	$PM_{2.5}$		**1,080 lbs/hour**	**525 lbs/hour**	**3,064** tons/year	**3,064** tons/year
19.4.	Sulfur Oxides (SO_X)		**31,478 lbs/hour**	**1,400 lbs/hour**	**6,128** tons/year	**6,128** tons/year
19.5.	Nitrogen Oxides (NO_X)		**2,843 lbs/hour**	**700 lbs/hour**	**3,064** tons/year	**3,064** tons/year
19.6.	Carbon Monoxide (CO)		**lbs/hour**	**lbs/hour**	tons/year	tons/year
19.7.	Lead		**lbs/hour**	**lbs/hour**	tons/year	tons/year
19.8.	Total Volatile Organic Compounds (VOCs)		**lbs/hour**	**lbs/hour**	tons/year	tons/year
19.9.	Total Hazardous Air Pollutants (HAPs)		**lbs/hour**	**lbs/hour**	tons/year	tons/year
19.10.	**Hg**	**7439-97-6**	**0.0059 lbs/hour**	**0.0059 lbs/hour**	**0.03** tons/year	**0.03** tons/year
19.11.	**NH3**	**7664-41-7**	**86 lbs/hour**	**57 lbs/hour**	**250** tons/year	**250** tons/year
19.12.			**lbs/hour**	**lbs/hour**	tons/year	tons/year
19.13.			**lbs/hour**	**lbs/hour**	tons/year	tons/year
19.14.			**lbs/hour**	**lbs/hour**	tons/year	tons/year
19.15.			**lbs/hour**	**lbs/hour**	tons/year	tons/year
19.16.			**lbs/hour**	**lbs/hour**	tons/year	tons/year
19.17			**lbs/hour**	**lbs/hour**	tons/year	tons/year
19.18.			**lbs/hour**	**lbs/hour**	tons/year	tons/year

20. Provide Any Additional Information Necessary to Understanding the Emission Rates Provided Above:

Attach the Basis of Determination or Calculations for each Emission Rate provided above.

Minor New Source Review Information

21. Does the Process Have the Potential to Emit More Than Five Tons Per Year of Any Pollutant? ☒ YES ☐ NO

22. Is the Source New or Existing? ☐ NEW ☒ EXISTING
See Question 11 of AQM-1

If the Process has the Potential to Emit more than five tons per year of any pollutant, and is a New Source, a Control Technology Analysis pursuant to Regulation No. 1125 Section 4 must be conducted and attached to this application.

Additional Information

23. Is There Any Additional Information Pertinent to this Application? ☐ YES ☒ NO

If YES, complete the rest of Question 23.

23.1. Describe:

Air Emissions Modeling Application

This form is optional. Applications will be considered complete without this form. Completing this form may expedite processing of your permit.

If you are using this form electronically, press F1 at any time for help. For additional help conducting air emissions modeling see the air contaminant equipment registration form booklet sections V and VI available at: http://www.dnrec.state.de.us/air/aqm_page/docs/pdf/reg%20instruc_final.pdf.

General Information

1. Identification of Equipment/Process Being Modeled: **Units 3 and 4 Common Stack**
2. Modeling Tool Used: ☐ SCREEN3 ☐ ISC3 ☐ AERSCREEN ☒ AERMOD ☐ Other (Specify):

Modeling Information

3. Modeling Information

If there are more than 20 Contaminants, attach additional copies of this page as needed

	Contaminant Name	Maximum Controlled Emission Rate at Design Capacity	Short Term Emission Rate	Threshold Limit Value (TLV)	TLV Source	Maximum Downwind Concentration (MDC) (8-Hour Average)	TLV:MDC Ratio
3.1.	**Mercury**	**0.10** lbs/day	**0.0005** grams/second	**0.05** mg/m^3	**NIOSH**	**7.62E-08** mg/m^3	**6.56E+05**
3.2.	**Ammonia**	**1370.125** lbs/day	**7.19** grams/second	**18** mg/m^3	**NIOSH**	**1.04E-03** mg/m^3	**1.74E+04**
3.3.		lbs/day	grams/second	mg/m^3		mg/m^3	
3.4.		lbs/day	grams/second	mg/m^3		mg/m^3	
3.5.		lbs/day	grams/second	mg/m^3		mg/m^3	
3.6.		lbs/day	grams/second	mg/m^3		mg/m^3	
3.7.		lbs/day	grams/second	mg/m^3		mg/m^3	
3.8.		lbs/day	grams/second	mg/m^3		mg/m^3	
3.9.		lbs/day	grams/second	mg/m^3		mg/m^3	

Modeling Information

3.10.	lbs/day	grams/second	mg/m^3		mg/m^3	
3.11.	lbs/day	grams/second	mg/m^3		mg/m^3	
3.12.	lbs/day	grams/second	mg/m^3		mg/m^3	
3.13.	lbs/day	grams/second	mg/m^3		mg/m^3	
3.14.	lbs/day	grams/second	mg/m^3		mg/m^3	
3.15.	lbs/day	grams/second	mg/m^3		mg/m^3	
3.16.	lbs/day	grams/second	mg/m^3		mg/m^3	
3.17.	lbs/day	grams/second	mg/m^3		mg/m^3	
3.18.	lbs/day	grams/second	mg/m^3		mg/m^3	
3.19.	lbs/day	grams/second	mg/m^3		mg/m^3	
3.20.	lbs/day	grams/second	mg/m^3		mg/m^3	

NOTE: If the TLV:MDC Ratio is less than 100 for any of the Contaminants listed above, the equipment may not be eligible for approval. Contact the Department immediately to discuss the situation.

Attach copies of all modeling analyses conducted.

Additional Information

4. Is There Any Additional Information Pertinent to this Application? ☐ YES ☒ NO

If YES, complete the rest of Question 4.

4.1. Describe:

APC-2009/0105-C

Generic Process Equipment Application

If you are using this form electronically, press F1 at any time for help

General Information

1.	Facility Name: **Indian River Generating Station**
2.	Equipment ID Number: **ID 20 Ammonia Unloading, Storage and Handling System**
3.	Provide a brief description of Equipment or Process: **Aqueous ammonia (29%) will be delivered to the facility for injection to the Selective Catalytic Reduction system. The storage system will have a capacity of 90,000 gallons and will be within secondary containment. Air emissions from the unloading, storage and handling system will be limited to ammonia emissions from storage tank breathing losses. See process description in Section 1 of this application for further description of this system.**
4.	Manufacturer: **NA**
5.	Model: **NA**
6.	Serial Number: **NA**

Raw Material Information

7. Raw Materials Used in Process

If there are more than four Raw Materials used, attach additional copies of this page as needed.

	Raw Material Used	CAS Number	Usage Rate (include units)	MSDS Attached?
7.1.	**29% Aqueous Ammonia**	**1336-21-6**	**13,800 tons/year**	☒ YES ☐ NO
7.2.				☐ YES ☐ NO
7.3.				☐ YES ☐ NO
7.4.				☐ YES ☐ NO

Attach a copy of all calculations made to support the data in the table above.
Attach a Material Safety Data Sheet (MSDS) for each Raw Material used.

Products Produced Information

8. Products Produced

If there are more than four Products Produced, attach additional copies of this page as needed.

	Product Produced	CAS Number	Production Rate (include units)	MSDS Attached?
8.1.	**Not applicable.**			☐ YES ☐ NO
8.2.				☐ YES ☐ NO
8.3.				☐ YES ☐ NO

Products Produced Information

8.4.			☐ YES ☐ NO

Attach a copy of all calculations made to support the data in the table above.
Attach a Material Safety Data Sheet (MSDS) for each Product Produced.

Byproducts Generated Information

9. Byproducts Generated

If there are more than four Byproducts Generated, attach additional copies of this page as needed.

	Byproduct Generated	CAS Number	Generation Rate (include units)	MSDS Attached?
9.1.	**Not applicable.**			☐ YES ☐ NO
9.2.				☐ YES ☐ NO
9.3.				☐ YES ☐ NO
9.4.				☐ YES ☐ NO

Attach a copy of all calculations made to support the data in the table above.
Attach a Material Safety Data Sheet (MSDS) for each Byproduct Generated.

General Information

10. Manufacturer's Rated Capacity or Maximum Throughput of Equipment or Process: **13,800 tons/year of aqueous ammonia**

11. Describe Important Manufacturer Specifications and/or Operating Parameters for Equipment or Process: **The maximum amount of aqueous ammonia is based on the ammonia injection rate assuming a 100% capacity for both Units 3 and 4.**

Attach the Manufacturer's Specification Sheet(s) for the equipment or process.

Control Device Information

12. Is an Air Pollution Control Device Used? ☐ YES ☒ NO

If an Air Pollution Control Device is used, complete the rest of Question 12. If not, proceed to Question 13.

12.1. Is Knockout Used? ☐ YES ☒ NO

If YES, complete Form AQM-4.11 and attach it to this application.

12.2. Is a Settling Chamber Used? ☐ YES ☒ NO

If YES, complete Form AQM-4.10 and attach it to this application.

12.3. Is an Inertial or Cyclone Collector Used? ☐ YES ☒ NO

If YES, complete Form AQM-4.5 and attach it to this application.

12.4. Is a Fabric Collector or Baghouse Used? ☐ YES ☒ NO

If YES, complete Form AQM-4.6 and attach it to this application.

Control Device Information

12.5. Is a Venturi Scrubber Used?	☐ YES ☒ NO
If YES, complete Form AQM-4.8 and attach it to this application.	
12.6. Is an Electrostatic Precipitator Used?	☐ YES ☒ NO
If YES, complete Form AQM-4.7 and attach it to this application.	
12.7. Is Adsorption Equipment Used?	☐ YES ☒ NO
If YES, complete Form AQM-4.2 and attach it to this application.	
12.8. Is a Scrubber Used?	☐ YES ☒ NO
If YES, complete Form AQM-4.4 and attach it to this application.	
12.9. Is an Incinerator, Afterburner or Oxidizer Used?	☐ YES ☒ NO
If YES, complete Form AQM-4.1 and attach it to this application.	
12.10. Is a Flare Used?	☐ YES ☒ NO
If YES, complete Form AQM-4.3 and attach it to this application.	
12.11. Is Any Other Control Device Used?	☐ YES ☒ NO
If YES, attach a copy of the control device Manufacturer's Specification Sheet(s).	
If any other control device is used, complete the rest of Question 12. If not, proceed to Question 13.	
12.12. Describe Control Device:	
12.13. Pollutants Controlled: ☐ VOCs ☐ HAPs ☐ PM ☐ PM_{10} ☐ $PM_{2.5}$ ☐ NO_X ☐ SO_X ☐ Metals ☐ Other (Specify):	
12.14. Control Device Manufacturer:	
12.15. Control Device Model:	
12.16. Control Device Serial Number:	
12.17. Control Device Design Capacity:	
12.18. Control Device Removal or Destruction Efficiency:	

Stack Information

13. How Does the Process Equipment Vent: *(check all that apply)* ☒ Directly to the Atmosphere ☐ Through a Control Device Covered by Forms AQM-4.1 through 4.12 ☐ Through Another Control Device Described on This Form
If any of the process equipment vents directly to the atmosphere or through another control device described on this form, proceed to Question 14. If the process equipment vents through a control device, provide the stack parameters on the control device form and proceed to Question 18.
14. Number of Air Contaminant Emission Points:
If there are more than three Emission Points, attach additional copies of this page as needed.
For the first Emission Point
15. Emission Point Name: **Fugitive through pressure relief valve**

Stack Information

15.1. Stack Height Above Grade:	**feet**
15.2. Stack Exit Diameter: *(Provide Stack Dimensions If Rectangular Stack)*	**feet**
15.3. Is a Stack Cap Present?	☐ YES ☐ NO
15.4. Stack Configuration: *(check all that apply)*	☐ Vertical ☐ Horizontal ☐ Downward-Venting ☐ Other (Specify):
15.5. Stack Exit Gas Temperature:	**°F**
15.6. Stack Exit Gas Flow Rate:	**ACFM**
15.7. Distance to Nearest Property Line:	**feet**
15.8. Describe Nearest Obstruction:	
15.9. Height of Nearest Obstruction:	**feet**
15.10. Distance to Nearest Obstruction:	**feet**
15.11. Are Stack Sampling Ports Provided?	☐ YES ☐ NO
For the second Emission Point. If there is no second Emission Point, proceed to Question 18.	
16. Emission Point Name:	
16.1. Stack Height Above Grade:	**feet**
16.2. Stack Exit Diameter: *(Provide Stack Dimensions If Rectangular Stack)*	**feet**
16.3. Is a Stack Cap Present?	☐ YES ☐ NO
16.4. Stack Configuration: *(check all that apply)*	☐ Vertical ☐ Horizontal ☐ Downward-Venting ☐ Other (Specify):
16.5. Stack Exit Gas Temperature:	**°F**
16.6. Stack Exit Gas Flow Rate:	**ACFM**
16.7. Distance to Nearest Property Line:	**feet**
16.8. Describe Nearest Obstruction:	
16.9. Height of Nearest Obstruction:	**feet**
16.10. Distance to Nearest Obstruction:	**feet**
16.11. Are Stack Sampling Ports Provided?	☐ YES ☐ NO
For the third Emission Point. If there is no third Emission Point, proceed to Question 18.	
17. Emission Point Name:	
17.1. Stack Height Above Grade:	**feet**
17.2. Stack Exit Diameter: *(Provide Stack Dimensions If Rectangular Stack)*	**feet**
17.3. Is a Stack Cap Present?	☐ YES ☐ NO
17.4. Stack Configuration: *(check all that apply)*	☐ Vertical ☐ Horizontal ☐ Downward-Venting ☐ Other (Specify):
17.5. Stack Exit Gas Temperature:	**°F**
17.6. Stack Exit Gas Flow Rate:	**ACFM**

Stack Information

17.7. Distance to Nearest Property Line:	**feet**
17.8. Describe Nearest Obstruction:	
17.9. Height of Nearest Obstruction:	**feet**
17.10. Distance to Nearest Obstruction:	**feet**
17.11. Are Stack Sampling Ports Provided?	☐ YES ☐ NO

Monitoring Information

18. Will Emissions Data be Recorded by a Continuous Emission Monitoring System?	☐ YES ☒ NO
If Yes, attach a copy of the Continuous Emission Monitoring System Manufacturer's Specification Sheets	
If YES, complete the rest of Question 18. If NO, proceed to Question 19.	
18.1. Pollutants Monitored: ☐ VOCs ☐ HAPs ☐ PM ☐ PM_{10} ☐ $PM_{2.5}$ ☐ NO_X ☐ SO_X ☐ Metals ☐ Other (Specify):	
18.2. Describe the Continuous Emission Monitoring System:	
18.3. Manufacturer:	
18.4. Model:	
18.5. Serial Number:	
18.6. Will Multiple Emission Units Be Monitored at the Same Point?	☐ YES ☐ NO
If YES, complete the rest of Question 18. If NO, proceed to Question 19.	
18.7. Emission Units Monitored:	
18.8. Will More Than One Emission Unit be Emitting From the Combined Point At Any Time?	☐ YES ☐ NO
If YES, complete the rest of Question 18. If NO, proceed to Question 19.	
18.9. Emission Units Emitting Simultaneously:	

Monitoring and Alarm Information

19. Are There Any Alarms You Would Like the Department to Consider When Drafting the Permit?	☐ YES ☒ NO
If YES, complete the rest of Question 19. If NO, proceed to Question 20.	
19.1. Describe the System Alarm(s):	
If there are more than five alarms, attach additional copies of this page as needed.	

	Operating Parameter Monitored	Describe Alarm Trigger	Monitoring Device or Alarm Type	Does the Alarm Initiate an Automated Response?
19.1.1.			☐ Visual ☐ Auditory ☐ Automatic (Remote Monitoring) ☐ Other	☐ NO ☐ YES Describe:

Monitoring and Alarm Information

19.1.2.			☐ Visual ☐ Auditory ☐ Automatic (Remote Monitoring) ☐ Other	☐ NO ☐ YES Describe:
19.1.3.			☐ Visual ☐ Auditory ☐ Automatic (Remote Monitoring) ☐ Other	☐ NO ☐ YES Describe:
19.1.4.			☐ Visual ☐ Auditory ☐ Automatic (Remote Monitoring) ☐ Other	☐ NO ☐ YES Describe:
19.1.5.			☐ Visual ☐ Auditory ☐ Automatic (Remote Monitoring) ☐ Other	☐ NO ☐ YES Describe:

Emissions Information

20. Do You Plan to Take Any Emission Limitations to Avoid Major Source Status, Minor New Source Review, MACT, NSPS, etc.? ☐ YES ☒ NO

If YES, complete the rest of Question 20. If NO, proceed to Question 21.

20.1. Describe Any Proposed Emission Limitations:

Operating Information

21. Do You Plan to Take Any Operating Limitations to Avoid Major Source Status, Minor New Source Review, MACT, NSPS, etc.? ☐ YES ☒ NO

If YES, complete the rest of Question 21. If NO, proceed to Question 22.

21.1. Describe Any Proposed Operating Limitations:

Additional Information

22. Is There Any Additional Information Pertinent to this Application? ☐ YES ☒ NO

If YES, complete the rest of Question 22.

Additional Information
22.1. Describe:

Emissions Information Application

If you are using this form electronically, press F1 at any time for help

Process Information

1.	Number of Individual Pieces of Process Equipment in Process: **1**
2.	Number of Individual Control Devices in Process: **1**

Emissions Information for First Emission Point/Stack

3.	Emission Point Name: **ID 20**
4.	Equipment ID Number for all Process Equipment and Control Devices Venting Through Emission Point/Stack: **ID 20**
5.	Pollutant Emissions

If more than 18 pollutants are emitted at this Emission Point/Stack, attach additional copies of this page as needed.

	Pollutant Name (Specify VOCs and HAPs Individually in 5.10 through 5.18)	CAS Number (Not required for 5.1 through 5.9)	Maximum Uncontrolled Emission Rate at Design Capacity	Maximum Controlled Emission Rate at Design Capacity	Annual Potential to Emit (PTE)	Expected Annual Emissions
5.1.	Particulate Matter (PM)		**lbs/hour**	**lbs/hour**	tons/year	tons/year
5.2.	PM_{10}		**lbs/hour**	**lbs/hour**	tons/year	tons/year
5.3.	$PM_{2.5}$		**lbs/hour**	**lbs/hour**	tons/year	tons/year
5.4.	Sulfur Oxides (SO_X)		**lbs/hour**	**lbs/hour**	tons/year	tons/year
5.5.	Nitrogen Oxides (NO_X)		**lbs/hour**	**lbs/hour**	tons/year	tons/year
5.6.	Carbon Monoxide (CO)		**lbs/hour**	**lbs/hour**	tons/year	tons/year
5.7.	Lead		**lbs/hour**	**lbs/hour**	tons/year	tons/year
5.8.	Total Volatile Organic Compounds (VOCs)		**lbs/hour**	**lbs/hour**	tons/year	tons/year

Emissions Information for First Emission Point/Stack

5.9.	Total Hazardous Air Pollutants (HAPs)		**lbs/hour**	**lbs/hour**	tons/year	tons/year
5.10.	**Ammonia**	**7664-41-7**	**0.02 lbs/hour**	**0.02 lbs/hour**	**0.1** tons/year	**0.1** tons/year
5.11.			**lbs/hour**	**lbs/hour**	tons/year	tons/year
5.12.			**lbs/hour**	**lbs/hour**	tons/year	tons/year
5.13.			**lbs/hour**	**lbs/hour**	tons/year	tons/year
5.14.			**lbs/hour**	**lbs/hour**	tons/year	tons/year
5.15.			**lbs/hour**	**lbs/hour**	tons/year	tons/year
5.16.			**lbs/hour**	**lbs/hour**	tons/year	tons/year
5.17			**lbs/hour**	**lbs/hour**	tons/year	tons/year
5.18.			**lbs/hour**	**lbs/hour**	tons/year	tons/year

6. Provide Any Additional Information Necessary to Understanding the Emission Rates Provided Above:

Attach the Basis of Determination or Calculations for each Emission Rate provided above.

Emissions Information for Second Emission Point/Stack

7. Emission Point Name:

8. Equipment ID Number for all Process Equipment and Control Devices Venting Through Emission Point/Stack:

9. Pollutant Emissions

If more than 18 pollutants are emitted at this Emission Point/Stack, attach additional copies of this page as needed.

Pollutant Name (Specify VOCs and HAPs Individually in 9.10 through 9.18)	CAS Number (Not required for 9.1 through 9.9)	Maximum Uncontrolled Emission Rate at Design Capacity	Maximum Controlled Emission Rate at Design Capacity	Annual Potential to Emit (PTE)	Expected Annual Emissions

Emissions Information for Second Emission Point/Stack

9.1.	Particulate Matter (PM)		**lbs/hour**	**lbs/hour**	tons/year	tons/year
9.2.	PM_{10}		**lbs/hour**	**lbs/hour**	tons/year	tons/year
9.3.	$PM_{2.5}$		**lbs/hour**	**lbs/hour**	tons/year	tons/year
9.4.	Sulfur Oxides (SO_X)		**lbs/hour**	**lbs/hour**	tons/year	tons/year
9.5.	Nitrogen Oxides (NO_X)		**lbs/hour**	**lbs/hour**	tons/year	tons/year
9.6.	Carbon Monoxide (CO)		**lbs/hour**	**lbs/hour**	tons/year	tons/year
9.7.	Lead		**lbs/hour**	**lbs/hour**	tons/year	tons/year
9.8.	Total Volatile Organic Compounds (VOCs)		**lbs/hour**	**lbs/hour**	tons/year	tons/year
9.9.	Total Hazardous Air Pollutants (HAPs)		**lbs/hour**	**lbs/hour**	tons/year	tons/year
9.10.			**lbs/hour**	**lbs/hour**	tons/year	tons/year
9.11.			**lbs/hour**	**lbs/hour**	tons/year	tons/year
9.12.			**lbs/hour**	**lbs/hour**	tons/year	tons/year
9.13.			**lbs/hour**	**lbs/hour**	tons/year	tons/year
9.14.			**lbs/hour**	**lbs/hour**	tons/year	tons/year
9.15.			**lbs/hour**	**lbs/hour**	tons/year	tons/year
9.16.			**lbs/hour**	**lbs/hour**	tons/year	tons/year
9.17			**lbs/hour**	**lbs/hour**	tons/year	tons/year
9.18.			**lbs/hour**	**lbs/hour**	tons/year	tons/year

10. Provide Any Additional Information Necessary to Understanding the Emission Rates Provided Above:

Attach the Basis of Determination or Calculations for each Emission Rate provided above.

Emissions Information for Third Emission Point/Stack

11. Emission Point Name:

12. Equipment ID Number for all Process Equipment and Control Devices Venting Through Emission Point/Stack:

13. Pollutant Emissions

If more than 18 pollutants are emitted at this Emission Point/Stack, attach additional copies of this page as needed.

	Pollutant Name (Specify VOCs and HAPs Individually in 13.10 through 13.18)	CAS Number (Not required for 13.1 through 13.9)	Maximum Uncontrolled Emission Rate at Design Capacity	Maximum Controlled Emission Rate at Design Capacity	Annual Potential to Emit (PTE)	Expected Annual Emissions
13.1.	Particulate Matter (PM)		**lbs/hour**	**lbs/hour**	tons/year	tons/year
13.2.	PM_{10}		**lbs/hour**	**lbs/hour**	tons/year	tons/year
13.3.	$PM_{2.5}$		**lbs/hour**	**lbs/hour**	tons/year	tons/year
13.4.	Sulfur Oxides (SO_X)		**lbs/hour**	**lbs/hour**	tons/year	tons/year
13.5.	Nitrogen Oxides (NO_X)		**lbs/hour**	**lbs/hour**	tons/year	tons/year
13.6.	Carbon Monoxide (CO)		**lbs/hour**	**lbs/hour**	tons/year	tons/year
13.7.	Lead		**lbs/hour**	**lbs/hour**	tons/year	tons/year
13.8.	Total Volatile Organic Compounds (VOCs)		**lbs/hour**	**lbs/hour**	tons/year	tons/year
13.9.	Total Hazardous Air Pollutants (HAPs)		**lbs/hour**	**lbs/hour**	tons/year	tons/year
13.10.			**lbs/hour**	**lbs/hour**	tons/year	tons/year
13.11.			**lbs/hour**	**lbs/hour**	tons/year	tons/year
13.12.			**lbs/hour**	**lbs/hour**	tons/year	tons/year
13.13.			**lbs/hour**	**lbs/hour**	tons/year	tons/year
13.14.			**lbs/hour**	**lbs/hour**	tons/year	tons/year

Emissions Information for Third Emission Point/Stack

13.15.		**lbs/hour**	**lbs/hour**	tons/year	tons/year
13.16.		**lbs/hour**	**lbs/hour**	tons/year	tons/year
13.17		**lbs/hour**	**lbs/hour**	tons/year	tons/year
13.18.		**lbs/hour**	**lbs/hour**	tons/year	tons/year

14. Provide Any Additional Information Necessary to Understanding the Emission Rates Provided Above:

Attach the Basis of Determination or Calculations for each Emission Rate provided above.

Emissions Information for Fourth Emission Point/Stack

15. Emission Point Name:

16. Equipment ID Number for all Process Equipment and Control Devices Venting Through Emission Point/Stack:

17. Pollutant Emissions

If more than 18 pollutants are emitted at this Emission Point/Stack, attach additional copies of this page as needed.

	Pollutant Name (Specify VOCs and HAPs Individually in 17.10 through 17.18)	CAS Number (Not required for 17.1 through 17.9)	Maximum Uncontrolled Emission Rate at Design Capacity	Maximum Controlled Emission Rate at Design Capacity	Annual Potential to Emit (PTE)	Expected Annual Emissions
17.1.	Particulate Matter (PM)		**lbs/hour**	**lbs/hour**	tons/year	tons/year
17.2.	PM_{10}		**lbs/hour**	**lbs/hour**	tons/year	tons/year
17.3.	$PM_{2.5}$		**lbs/hour**	**lbs/hour**	tons/year	tons/year
17.4.	Sulfur Oxides (SO_X)		**lbs/hour**	**lbs/hour**	tons/year	tons/year
17.5.	Nitrogen Oxides (NO_X)		**lbs/hour**	**lbs/hour**	tons/year	tons/year
17.6.	Carbon Monoxide (CO)		**lbs/hour**	**lbs/hour**	tons/year	tons/year

Emissions Information for Fourth Emission Point/Stack

17.7.	Volatile Organic Compounds (VOCs)		**lbs/hour**	**lbs/hour**	tons/year	tons/year
17.8.	Lead		**lbs/hour**	**lbs/hour**	tons/year	tons/year
17.9.			**lbs/hour**	**lbs/hour**	tons/year	tons/year
17.10.			**lbs/hour**	**lbs/hour**	tons/year	tons/year
17.11.			**lbs/hour**	**lbs/hour**	tons/year	tons/year
17.12.			**lbs/hour**	**lbs/hour**	tons/year	tons/year
17.13.			**lbs/hour**	**lbs/hour**	tons/year	tons/year
17.14.			**lbs/hour**	**lbs/hour**	tons/year	tons/year
17.15.			**lbs/hour**	**lbs/hour**	tons/year	tons/year
17.16.			**lbs/hour**	**lbs/hour**	tons/year	tons/year
17.17			**lbs/hour**	**lbs/hour**	tons/year	tons/year
17.18.			**lbs/hour**	**lbs/hour**	tons/year	tons/year

18. Provide Any Additional Information Necessary to Understanding the Emission Rates Provided Above:

Attach the Basis of Determination or Calculations for each Emission Rate provided above.

If there are more than four Emission Points/Stacks, attach additional copies of this form as needed.

Overall Process Emissions

19. Pollutant Emissions

If more than 18 pollutants are emitted from this Process, attach additional copies of this page as needed.

Pollutant Name (Specify VOCs and HAPs Individually in 19.10 through 19.18)	CAS Number (Not required for 19.1 through 19.9)	Maximum Uncontrolled Emission Rate at Design Capacity	Maximum Controlled Emission Rate at Design Capacity	Annual Potential to Emit (PTE)	Expected Annual Emissions

Overall Process Emissions

19.1.	Particulate Matter (PM)		**lbs/hour**	**lbs/hour**	tons/year	tons/year
19.2.	PM_{10}		**lbs/hour**	**lbs/hour**	tons/year	tons/year
19.3.	$PM_{2.5}$		**lbs/hour**	**lbs/hour**	tons/year	tons/year
19.4.	Sulfur Oxides (SO_X)		**lbs/hour**	**lbs/hour**	tons/year	tons/year
19.5.	Nitrogen Oxides (NO_X)		**lbs/hour**	**lbs/hour**	tons/year	tons/year
19.6.	Carbon Monoxide (CO)		**lbs/hour**	**lbs/hour**	tons/year	tons/year
19.7.	Lead		**lbs/hour**	**lbs/hour**	tons/year	tons/year
19.8.	Total Volatile Organic Compounds (VOCs)		**lbs/hour**	**lbs/hour**	tons/year	tons/year
19.9.	Total Hazardous Air Pollutants (HAPs)		**lbs/hour**	**lbs/hour**	tons/year	tons/year
19.10.	**Ammonia**	**7664-41-7**	**0.02 lbs/hour**	**0.02 lbs/hour**	**0.1** tons/year	**0.1** tons/year
19.11.			**lbs/hour**	**lbs/hour**	tons/year	tons/year
19.12.			**lbs/hour**	**lbs/hour**	tons/year	tons/year
19.13.			**lbs/hour**	**lbs/hour**	tons/year	tons/year
19.14.			**lbs/hour**	**lbs/hour**	tons/year	tons/year
19.15.			**lbs/hour**	**lbs/hour**	tons/year	tons/year
19.16.			**lbs/hour**	**lbs/hour**	tons/year	tons/year
19.17			**lbs/hour**	**lbs/hour**	tons/year	tons/year
19.18.			**lbs/hour**	**lbs/hour**	tons/year	tons/year

20. Provide Any Additional Information Necessary to Understanding the Emission Rates Provided Above:

Attach the Basis of Determination or Calculations for each Emission Rate provided above.

Minor New Source Review Information

21. Does the Process Have the Potential to Emit More Than Five Tons Per Year of Any Pollutant? ☐ YES ☒ NO

22. Is the Source New or Existing? ☒ NEW ☐ EXISTING
See Question 11 of AQM-1

If the Process has the Potential to Emit more than five tons per year of any pollutant, and is a New Source, a Control Technology Analysis pursuant to Regulation No. 1125 Section 4 must be conducted and attached to this application.

Additional Information

23. Is There Any Additional Information Pertinent to this Application? ☐ YES ☒ NO

If YES, complete the rest of Question 23.

23.1. Describe:

AQ-2009/0166-C (5)

Silo Application

If you are using this form electronically, press F1 at any time for help

General Information

1. Facility Name: **Indian River Generating Station**
2. Equipment ID Number: **ID 21 Pebble Lime Bulk Storage Silo**
3. Manufacturer: **TBD**
4. Model: **TBD**
5. Serial Number: **TBD**
6. Silo Type: ☒ Tower Silo
   ☐ Bunker Silo
   ☐ Other (Specify):
7. Number of Compartments in Silo: **1**
8. Material Stored in Silo:

If there are more than three Materials Stored in the Silo, attach additional copies of this page as needed

	Material	Material Density	Compartment Stored In
8.1.	**Pebble Lime**	**720-1130 kilogram/cubic meter**	**Main**
8.2.		**tons/cubic foot**	
8.3.		**tons/cubic foot**	

Attach a Material Safety Data Sheet (MSDS) for each Material Stored in the Silo.

9. Silo Storage Capacity: **63,000 cubic feet**
10. Silo Loading Method: ☒ Pneumatic ☐ Vacuum
    ☐ Hydraulic ☐ Other (Specify):
    ☐ Mechanical
11. Maximum Rate of Silo Loading: **50 tons/hour**
12. Is the Silo Equipped With a Pressure-Vacuum Relief Valve? ☒ YES ☐ NO

If YES, complete the rest of Question 12. If NO, proceed to Question 13.

12.1. Describe the Pressure Relief Valve Settings: **TBD**

13. Is the Silo Equipped With a System That Prevents Overfilling? ☒ YES ☐ NO

If YES, complete the rest of Question 13. If NO, proceed to Question 14.

13.1. Describe the Overfilling Prevention System: **TBD**

General Information

14. Is the Silo Equipped With a Silo Level Monitoring System? ☒ YES ☐ NO

If YES, complete the rest of Question 14. If NO, proceed to Question 15.

14.1. Type of Level Indicator: ☐ Point
☒ Continuous
☐ Other (Specify):

15. Is the Silo Equipped With a Power/Control Panel with a High Level Indicator? ☒ YES ☐ NO

Control Device Information

16. Is an Air Pollution Control Device Used? ☒ YES ☐ NO

If an Air Pollution Control Device is used, complete the rest of Question 16. If not, proceed to Question 17.

16.1. Is Knockout Used? ☐ YES ☒ NO

If YES, complete Form AQM-4.11 and attach it to this application.

16.2. Is a Settling Chamber Used? ☐ YES ☒ NO

If YES, complete Form AQM-4.10 and attach it to this application.

16.3. Is an Inertial or Cyclone Collector Used? ☐ YES ☒ NO

If YES, complete Form AQM-4.5 and attach it to this application.

16.4. Is a Fabric Collector or Baghouse Used? ☒ YES ☐ NO

If YES, complete Form AQM-4.6 and attach it to this application.

16.5. Is a Venturi Scrubber Used? ☐ YES ☒ NO

If YES, complete Form AQM-4.8 and attach it to this application.

16.6. Is an Electrostatic Precipitator Used? ☐ YES ☒ NO

If YES, complete Form AQM-4.7 and attach it to this application.

16.7. Is Any Other Control Device Used? ☐ YES ☒ NO

If YES, attach a copy of the Control Device Manufacturer's Specification Sheets.

If Any Other Control Device is used, complete the rest of Question 16. If not, proceed to Question 17.

16.8. Describe Control Device:

16.9. Pollutants Controlled: ☐ HAPs ☐ PM ☐ PM_{10} ☐ $PM_{2.5}$ ☐ Metals ☐ Other (Specify):

16.10. Control Device Manufacturer:

16.11. Control Device Model:

16.12. Control Device Serial Number:

16.13. Control Device Design Capacity:

16.14. Control Device Removal or Destruction Efficiency:

Stack Information

17. How Does the Process Equipment Vent:
(check all that apply)
☐ Directly to the Atmosphere
☒ Through a Control Device Covered by Forms AQM-4.1 through 4.12
☐ Through Another Control Device Described on This Form

If any of the process equipment vents directly to the atmosphere or through another control device described on this form, proceed to Question 18. If the process equipment vents through a control device, provide the stack parameters on the control device form (AQM-4 Series) and proceed to Question 19.

18. Emission Point Name:

18.1. Stack Height Above Grade: **feet**

18.2. Stack Exit Diameter: **feet**
(Provide Stack Dimensions If Rectangular Stack)

18.3. Is a Stack Cap Present? ☐ YES ☐ NO

18.4. Stack Configuration: ☐ Vertical ☐ Horizontal ☐ Downward-Venting
(check all that apply) ☐ Other (Specify):

18.5. Stack Exit Gas Temperature: **°F**

18.6. Stack Exit Gas Flow Rate: **ACFM**

18.7. Distance to Nearest Property Line: **feet**

18.8. Describe Nearest Obstruction:

18.9. Height of Nearest Obstruction: **feet**

18.10. Distance to Nearest Obstruction: **feet**

18.11. Are Stack Sampling Ports Provided? ☐ YES ☐ NO

Monitoring Information

19. Will Emissions Data be Recorded by a Continuous Emission Monitoring System? ☐ YES ☒ NO

If Yes, attach a copy of the Continuous Emission Monitoring System Manufacturer's Specification Sheets

If YES, complete the rest of Question 19. If NO, proceed to Question 20.

19.1. Pollutants Monitored: ☐ VOCs ☐ HAPs ☐ PM ☐ PM_{10} ☐ $PM_{2.5}$ ☐ NO_X ☐ SO_X ☐ Metals
☐ Other (Specify):

19.2. Describe the Continuous Emission Monitoring System:

19.3. Manufacturer:

19.4. Model:

19.5. Serial Number:

19.6. Will Multiple Emission Units Be Monitored at the Same Point? ☐ YES ☐ NO

If YES, complete the rest of Question 19. If NO, proceed to Question 20.

19.7. Emission Units Monitored:

Monitoring Information

19.8. Will More Than One Emission Unit be Emitting From the Combined Point At Any Time?	☐ YES ☐ NO
If YES, complete the rest of Question 19. If NO, proceed to Question 20.	
19.9. Emission Units Emitting Simultaneously:	

Visible Emissions Monitoring Information

20. Proposed Technique Used to Monitor Visible Emissions:	☐ Opacity Monitor (COM) ☐ Manual (Method 9) ☒ Manual (Method 22) ☐ Other (Describe):
If an Opacity Monitor (COM) is used, complete the rest of Question 20. If not, proceed to Question 21.	
20.1. Describe the Continuous Opacity Monitoring System:	
20.2. Manufacturer:	
20.3. Model:	
20.4. Serial Number:	
21. Proposed Frequency of Opacity Monitoring:	

Monitoring and Alarm Information

22. Are There Any Alarms You Would Like the Department to Consider When Drafting the Permit?	☐ YES ☒ NO
If YES, complete the rest of Question 22. If NO, proceed to Question 23.	
22.1. Describe the System Alarm(s):	

If there are more than five alarms, attach additional copies of this page as needed.

	Operating Parameter Monitored	Describe Alarm Trigger	Monitoring Device or Alarm Type	Does the Alarm Initiate an Automated Response?
22.1.1.			☐ Visual ☐ Auditory ☐ Automatic (Remote Monitoring) ☐ Other	☐ NO ☐ YES Describe:
22.1.2.			☐ Visual ☐ Auditory ☐ Automatic (Remote Monitoring) ☐ Other	☐ NO ☐ YES Describe:
22.1.3.			☐ Visual ☐ Auditory ☐ Automatic (Remote Monitoring) ☐ Other	☐ NO ☐ YES Describe:

Monitoring and Alarm Information

22.1.4.			☐ Visual ☐ Auditory ☐ Automatic (Remote Monitoring) ☐ Other	☐ NO ☐ YES Describe:
22.1.5.			☐ Visual ☐ Auditory ☐ Automatic (Remote Monitoring) ☐ Other	☐ NO ☐ YES Describe:

Emissions Information

23. Do You Plan to Take Any Emission Limitations to Avoid Major Source Status, Minor New Source Review, MACT, NSPS, etc.? ☐ YES ☒ NO

If YES, complete the rest of Question 23. If NO, proceed to Question 24.

23.1. Describe Any Proposed Emission Limitations:

Operating Information

24. Do You Plan to Take Any Operating Limitations to Avoid Major Source Status, Minor New Source Review, MACT, NSPS, etc.? ☐ YES ☒ NO

If YES, complete the rest of Question 24. If NO, proceed to Question 25.

24.1. Describe Any Proposed Operating Limitations:

Additional Information

25. Is There Any Additional Information Pertinent to this Application? ☐ YES ☒ NO

If YES, complete the rest of Question 25.

25.1. Describe:

Baghouse Application

If you are using this form electronically, press F1 at any time for help

General Information

1.	Facility Name: **Indian River Generating Station**
2.	Equipment ID Number: **ID 21 Pebble Lime Bulk Storage Silo Bin Vent Filter**
3.	Manufacturer: **TBD**
4.	Model: **TBD**
5.	Serial Number: **NA**
6.	Is the Baghouse Insulated? ☒ YES ☐ NO
7.	Design Minimum Operating Temperature: **70 °F**
8.	Design Maximum Operating Temperature: **250 °F**
9.	Are Temperature Controls Provided? ☐ YES ☒ NO
If Yes, complete the rest of Question 9. If no, proceed to Question 10.	
9.1.	Describe the Temperature Controls:
10.	Air Flow Through Baghouse: ☐ Forced ☒ Induced ☐ Other (Specify):
11.	Direction of Flow Through Filters: ☐ Inside Out ☒ Outside In
12.	Particulate Removal Efficiency: **99.7 (avg.)** %
Attach the Manufacturer's Specification Sheet for the Baghouse and Particle Size Removal Efficiency Curve and basis of determination.	

Compartment Information

13.	Number of Compartments: **Single**
14.	Number of Filters (Bags) Per Compartment:
15.	Can the Compartments be Isolated for Replacement or Repair? ☐ YES ☐ NO

Gas Stream Information

16.	Maximum Inlet Volumetric Gas Flow Rate: **2,100 acfm at 250 °F**
17.	Maximum Outlet Volumetric Gas Flow Rate: **2,100 acfm at 250 °F**
18.	Dew Point at Maximum Moisture Content of Gas: **70 °F**

Gas Stream Information

19. pH of Gas Handled: **NA (air)**

20. Dust Characteristics: (Check All That Apply)
- ☐ Sticky
- ☐ Wet
- ☐ Corrosive
- ☒ Dry
- ☐ Other (Specify):

Contaminant Information

21. Percent of Each Contaminant in the Waste Gas and Removal Efficiency

If more than five Contaminants are present, attach additional copies of this page as needed.

	Contaminant Name	Contaminant CAS Number	Percent of Waste Gas	Removal Efficiency
21.1.	**PM/PM10**		**%**	**99.7 (avg.) %**
21.2.			**%**	%
21.3.			**%**	%
21.4.			**%**	%
21.5.			**%**	%

Fabric Filter (Bag) Information

22. Fabric Type:
- ☒ Felted
- ☐ Woven
- ☐ Felted-Woven
- ☐ Membrane
- ☐ PTFE Membrane
- ☐ Sintered Metal
- ☐ Ceramic Cartridge
- ☐ Other (Specify):

23. Fabric Material: **TBD**

24. Maximum Continuous Filter Operating Temperature: **250 °F**

25. Clean Fabric Permeability: **TBD** scfm/ft^2 at ΔP inches of water

26. Fabric Filter (Bag) Diameter or Width: **TBD inches**

27. Fabric Filter (Bag) Length: **TBD inches**

28. Effective Area Per Filter: **525 (estimated-will depend on final design) square feet**

29. Minimum Effective Air to Cloth Ratio: 4:1 (estimated-will depend on final design) **inches**

30. Maximum Effective Air to Cloth Ratio: 4:1 (estimated-will depend on final design) **inches**

31. Design Pressure Drop Across Baghouse: 6-12 **inches water**

32. Describe Determining Factor Fabric Filter Changing/Replacement: **Bag filter based on visual inspection and/or differential pressure.**

Attach the Manufacturer's Specification Sheet for the Fabric Filters (Bags).

Filter Cleaning Information

33. Filter Cleaning Method: ☐ Manual Cleaning ☐ Bag Collapse ☐ Reverse Air Jet ☐ Mechanical Shakers ☐ Sonic Cleaning ☒ Pulse Jet ☐ Pneumatic Shakers ☐ Reverse Air Flow ☐ Other (Specify):

If Reverse Air Jet or Pulse Jet is used, complete the rest of Question 33. If not, proceed to Question 34.

33.1. Air Pressure: 60-120 (estimated) **psi**

33.2. Describe How Air Is Supplied to System: **From facility compressed air line**

34. Describe How Filter Cleaning Is Initiated: ☐ Manual ☒ Pressure Drop ☐ Timer ☐ Other (Specify):

Hopper Information

35. Is the Hopper Heated? ☐ YES ☐ NO

36. Is there a Hopper Vibrator? ☐ YES ☐ NO

37. Describe How Collected Material is Treated or Disposed of:

Stack Information

38. Emission Point Name: **ID 21**

38.1. Stack Height Above Grade: **110 feet**

38.2. Stack Exit Diameter: **TBD feet**
(Provide Stack Dimensions If Rectangular Stack)

38.3. Is a Stack Cap Present? ☐ YES ☒ NO

38.4. Stack Configuration: ☒ Vertical ☐ Horizontal ☐ Downward-Venting
(check all that apply) ☐ Other (Specify):

38.5. Stack Exit Gas Temperature: **250 °F**

38.6. Stack Exit Gas Flow Rate: **2,100 ACFM**

38.7. Distance to Nearest Property Line: **450 feet**

38.8. Describe Nearest Obstruction: **Byproduct Storage Silo**

38.9. Height of Nearest Obstruction: **180 feet**

38.10. Distance to Nearest Obstruction: **250 feet**

Stack Information

38.11. Are Stack Sampling Ports Provided? ☐ YES ☒ NO

Monitoring and Alarm Information

39. Are There Any Alarms You Would Like the Department to Consider When Drafting the Permit? ☐ YES ☒ NO

If YES, complete the rest of Question 39. If NO, proceed to Question 40.

39.1. Describe the System Alarm(s):

If there are more than five alarms, attach additional copies of this page as needed.

	Operating Parameter Monitored	Describe Alarm Trigger	Monitoring Device or Alarm Type	Does the Alarm Initiate an Automated Response?
39.1.1.			☐ Visual ☐ Auditory ☐ Automatic (Remote Monitoring) ☐ Other	☐ NO ☐ YES Describe:
39.1.2.			☐ Visual ☐ Auditory ☐ Automatic (Remote Monitoring) ☐ Other	☐ NO ☐ YES Describe:
39.1.3.			☐ Visual ☐ Auditory ☐ Automatic (Remote Monitoring) ☐ Other	☐ NO ☐ YES Describe:
39.1.4.			☐ Visual ☐ Auditory ☐ Automatic (Remote Monitoring) ☐ Other	☐ NO ☐ YES Describe:
39.1.5.			☐ Visual ☐ Auditory ☐ Automatic (Remote Monitoring) ☐ Other	☐ NO ☐ YES Describe:

Additional Information

40. Is There Any Additional Information Pertinent to this Application? ☐ YES ☒ NO

If YES, complete the rest of Question 40.

40.1. Describe:

Emissions Information Application

If you are using this form electronically, press F1 at any time for help

Process Information

1.	Number of Individual Pieces of Process Equipment in Process: **1**
2.	Number of Individual Control Devices in Process: **1**

Emissions Information for First Emission Point/Stack

3.	Emission Point Name: **ID 21**
4.	Equipment ID Number for all Process Equipment and Control Devices Venting Through Emission Point/Stack: **ID 21**
5.	Pollutant Emissions

If more than 18 pollutants are emitted at this Emission Point/Stack, attach additional copies of this page as needed.

	Pollutant Name (Specify VOCs and HAPs Individually in 5.10 through 5.18)	CAS Number (Not required for 5.1 through 5.9)	Maximum Uncontrolled Emission Rate at Design Capacity	Maximum Controlled Emission Rate at Design Capacity	Annual Potential to Emit (PTE)	Expected Annual Emissions
5.1.	Particulate Matter (PM)		**43 lbs/hour**	**0.13 lbs/hour**	**0.6** tons/year	**0.6** tons/year
5.2.	PM_{10}		**36 lbs/hour**	**0.11 lbs/hour**	**0.5** tons/year	**0.5** tons/year
5.3.	$PM_{2.5}$		**13 lbs/hour**	**0.04 lbs/hour**	**0.2** tons/year	**0.2** tons/year
5.4.	Sulfur Oxides (SO_X)		**lbs/hour**	**lbs/hour**	tons/year	tons/year
5.5.	Nitrogen Oxides (NO_X)		**lbs/hour**	**lbs/hour**	tons/year	tons/year
5.6.	Carbon Monoxide (CO)		**lbs/hour**	**lbs/hour**	tons/year	tons/year
5.7.	Lead		**lbs/hour**	**lbs/hour**	tons/year	tons/year
5.8.	Total Volatile Organic Compounds (VOCs)		**lbs/hour**	**lbs/hour**	tons/year	tons/year

Emissions Information for First Emission Point/Stack

5.9.	Total Hazardous Air Pollutants (HAPs)		**lbs/hour**	**lbs/hour**	tons/year	tons/year
5.10.			**lbs/hour**	**lbs/hour**	tons/year	tons/year
5.11.			**lbs/hour**	**lbs/hour**	tons/year	tons/year
5.12.			**lbs/hour**	**lbs/hour**	tons/year	tons/year
5.13.			**lbs/hour**	**lbs/hour**	tons/year	tons/year
5.14.			**lbs/hour**	**lbs/hour**	tons/year	tons/year
5.15.			**lbs/hour**	**lbs/hour**	tons/year	tons/year
5.16.			**lbs/hour**	**lbs/hour**	tons/year	tons/year
5.17			**lbs/hour**	**lbs/hour**	tons/year	tons/year
5.18.			**lbs/hour**	**lbs/hour**	tons/year	tons/year

6. Provide Any Additional Information Necessary to Understanding the Emission Rates Provided Above:

Attach the Basis of Determination or Calculations for each Emission Rate provided above.

Emissions Information for Second Emission Point/Stack

7. Emission Point Name:

8. Equipment ID Number for all Process Equipment and Control Devices Venting Through Emission Point/Stack:

9. Pollutant Emissions

If more than 18 pollutants are emitted at this Emission Point/Stack, attach additional copies of this page as needed.

Pollutant Name (Specify VOCs and HAPs Individually in 9.10 through 9.18)	CAS Number (Not required for 9.1 through 9.9)	Maximum Uncontrolled Emission Rate at Design Capacity	Maximum Controlled Emission Rate at Design Capacity	Annual Potential to Emit (PTE)	Expected Annual Emissions

Emissions Information for Second Emission Point/Stack

9.1.	Particulate Matter (PM)		**lbs/hour**	**lbs/hour**	tons/year	tons/year
9.2.	PM_{10}		**lbs/hour**	**lbs/hour**	tons/year	tons/year
9.3.	$PM_{2.5}$		**lbs/hour**	**lbs/hour**	tons/year	tons/year
9.4.	Sulfur Oxides (SO_X)		**lbs/hour**	**lbs/hour**	tons/year	tons/year
9.5.	Nitrogen Oxides (NO_X)		**lbs/hour**	**lbs/hour**	tons/year	tons/year
9.6.	Carbon Monoxide (CO)		**lbs/hour**	**lbs/hour**	tons/year	tons/year
9.7.	Lead		**lbs/hour**	**lbs/hour**	tons/year	tons/year
9.8.	Total Volatile Organic Compounds (VOCs)		**lbs/hour**	**lbs/hour**	tons/year	tons/year
9.9.	Total Hazardous Air Pollutants (HAPs)		**lbs/hour**	**lbs/hour**	tons/year	tons/year
9.10.			**lbs/hour**	**lbs/hour**	tons/year	tons/year
9.11.			**lbs/hour**	**lbs/hour**	tons/year	tons/year
9.12.			**lbs/hour**	**lbs/hour**	tons/year	tons/year
9.13.			**lbs/hour**	**lbs/hour**	tons/year	tons/year
9.14.			**lbs/hour**	**lbs/hour**	tons/year	tons/year
9.15.			**lbs/hour**	**lbs/hour**	tons/year	tons/year
9.16.			**lbs/hour**	**lbs/hour**	tons/year	tons/year
9.17			**lbs/hour**	**lbs/hour**	tons/year	tons/year
9.18.			**lbs/hour**	**lbs/hour**	tons/year	tons/year

10. Provide Any Additional Information Necessary to Understanding the Emission Rates Provided Above:

Attach the Basis of Determination or Calculations for each Emission Rate provided above.

Emissions Information for Third Emission Point/Stack

11. Emission Point Name:

12. Equipment ID Number for all Process Equipment and Control Devices Venting Through Emission Point/Stack:

13. Pollutant Emissions

If more than 18 pollutants are emitted at this Emission Point/Stack, attach additional copies of this page as needed.

	Pollutant Name (Specify VOCs and HAPs Individually in 13.10 through 13.18)	CAS Number (Not required for 13.1 through 13.9)	Maximum Uncontrolled Emission Rate at Design Capacity	Maximum Controlled Emission Rate at Design Capacity	Annual Potential to Emit (PTE)	Expected Annual Emissions
13.1.	Particulate Matter (PM)		**lbs/hour**	**lbs/hour**	tons/year	tons/year
13.2.	PM_{10}		**lbs/hour**	**lbs/hour**	tons/year	tons/year
13.3.	$PM_{2.5}$		**lbs/hour**	**lbs/hour**	tons/year	tons/year
13.4.	Sulfur Oxides (SO_X)		**lbs/hour**	**lbs/hour**	tons/year	tons/year
13.5.	Nitrogen Oxides (NO_X)		**lbs/hour**	**lbs/hour**	tons/year	tons/year
13.6.	Carbon Monoxide (CO)		**lbs/hour**	**lbs/hour**	tons/year	tons/year
13.7.	Lead		**lbs/hour**	**lbs/hour**	tons/year	tons/year
13.8.	Total Volatile Organic Compounds (VOCs)		**lbs/hour**	**lbs/hour**	tons/year	tons/year
13.9.	Total Hazardous Air Pollutants (HAPs)		**lbs/hour**	**lbs/hour**	tons/year	tons/year
13.10.			**lbs/hour**	**lbs/hour**	tons/year	tons/year
13.11.			**lbs/hour**	**lbs/hour**	tons/year	tons/year
13.12.			**lbs/hour**	**lbs/hour**	tons/year	tons/year
13.13.			**lbs/hour**	**lbs/hour**	tons/year	tons/year
13.14.			**lbs/hour**	**lbs/hour**	tons/year	tons/year

Emissions Information for Third Emission Point/Stack

13.15.		**lbs/hour**	**lbs/hour**	tons/year	tons/year
13.16.		**lbs/hour**	**lbs/hour**	tons/year	tons/year
13.17		**lbs/hour**	**lbs/hour**	tons/year	tons/year
13.18.		**lbs/hour**	**lbs/hour**	tons/year	tons/year

14. Provide Any Additional Information Necessary to Understanding the Emission Rates Provided Above:

Attach the Basis of Determination or Calculations for each Emission Rate provided above.

Emissions Information for Fourth Emission Point/Stack

15. Emission Point Name:

16. Equipment ID Number for all Process Equipment and Control Devices Venting Through Emission Point/Stack:

17. Pollutant Emissions

If more than 18 pollutants are emitted at this Emission Point/Stack, attach additional copies of this page as needed.

	Pollutant Name (Specify VOCs and HAPs Individually in 17.10 through 17.18)	CAS Number (Not required for 17.1 through 17.9)	Maximum Uncontrolled Emission Rate at Design Capacity	Maximum Controlled Emission Rate at Design Capacity	Annual Potential to Emit (PTE)	Expected Annual Emissions
17.1.	Particulate Matter (PM)		**lbs/hour**	**lbs/hour**	tons/year	tons/year
17.2.	PM_{10}		**lbs/hour**	**lbs/hour**	tons/year	tons/year
17.3.	$PM_{2.5}$		**lbs/hour**	**lbs/hour**	tons/year	tons/year
17.4.	Sulfur Oxides (SO_X)		**lbs/hour**	**lbs/hour**	tons/year	tons/year
17.5.	Nitrogen Oxides (NO_X)		**lbs/hour**	**lbs/hour**	tons/year	tons/year
17.6.	Carbon Monoxide (CO)		**lbs/hour**	**lbs/hour**	tons/year	tons/year

Emissions Information for Fourth Emission Point/Stack

17.7.	Volatile Organic Compounds (VOCs)		lbs/hour	lbs/hour	tons/year	tons/year
17.8.	Lead		lbs/hour	lbs/hour	tons/year	tons/year
17.9.			lbs/hour	lbs/hour	tons/year	tons/year
17.10.			lbs/hour	lbs/hour	tons/year	tons/year
17.11.			lbs/hour	lbs/hour	tons/year	tons/year
17.12.			lbs/hour	lbs/hour	tons/year	tons/year
17.13.			lbs/hour	lbs/hour	tons/year	tons/year
17.14.			lbs/hour	lbs/hour	tons/year	tons/year
17.15.			lbs/hour	lbs/hour	tons/year	tons/year
17.16.			lbs/hour	lbs/hour	tons/year	tons/year
17.17			lbs/hour	lbs/hour	tons/year	tons/year
17.18.			lbs/hour	lbs/hour	tons/year	tons/year

18. Provide Any Additional Information Necessary to Understanding the Emission Rates Provided Above:

Attach the Basis of Determination or Calculations for each Emission Rate provided above.

If there are more than four Emission Points/Stacks, attach additional copies of this form as needed.

Overall Process Emissions

19. Pollutant Emissions

If more than 18 pollutants are emitted from this Process, attach additional copies of this page as needed.

Pollutant Name (Specify VOCs and HAPs Individually in 19.10 through 19.18)	CAS Number (Not required for 19.1 through 19.9)	Maximum Uncontrolled Emission Rate at Design Capacity	Maximum Controlled Emission Rate at Design Capacity	Annual Potential to Emit (PTE)	Expected Annual Emissions

Overall Process Emissions

19.1.	Particulate Matter (PM)		**43 lbs/hour**	**0.13 lbs/hour**	**0.6** tons/year	**0.6** tons/year
19.2.	PM_{10}		**36 lbs/hour**	**0.11 lbs/hour**	**0.5** tons/year	**0.5** tons/year
19.3.	$PM_{2.5}$		**13 lbs/hour**	**0.04 lbs/hour**	**0.2** tons/year	**0.2** tons/year
19.4.	Sulfur Oxides (SO_X)		**lbs/hour**	**lbs/hour**	tons/year	tons/year
19.5.	Nitrogen Oxides (NO_X)		**lbs/hour**	**lbs/hour**	tons/year	tons/year
19.6.	Carbon Monoxide (CO)		**lbs/hour**	**lbs/hour**	tons/year	tons/year
19.7.	Lead		**lbs/hour**	**lbs/hour**	tons/year	tons/year
19.8.	Total Volatile Organic Compounds (VOCs)		**lbs/hour**	**lbs/hour**	tons/year	tons/year
19.9.	Total Hazardous Air Pollutants (HAPs)		**lbs/hour**	**lbs/hour**	tons/year	tons/year
19.10.			**lbs/hour**	**lbs/hour**	tons/year	tons/year
19.11.			**lbs/hour**	**lbs/hour**	tons/year	tons/year
19.12.			**lbs/hour**	**lbs/hour**	tons/year	tons/year
19.13.			**lbs/hour**	**lbs/hour**	tons/year	tons/year
19.14.			**lbs/hour**	**lbs/hour**	tons/year	tons/year
19.15.			**lbs/hour**	**lbs/hour**	tons/year	tons/year
19.16.			**lbs/hour**	**lbs/hour**	tons/year	tons/year
19.17			**lbs/hour**	**lbs/hour**	tons/year	tons/year
19.18.			**lbs/hour**	**lbs/hour**	tons/year	tons/year

20. Provide Any Additional Information Necessary to Understanding the Emission Rates Provided Above:

Attach the Basis of Determination or Calculations for each Emission Rate provided above.

Minor New Source Review Information

21. Does the Process Have the Potential to Emit More Than Five Tons Per Year of Any Pollutant? ☐ YES ☒ NO

22. Is the Source New or Existing? ☒ NEW ☐ EXISTING
See Question 11 of AQM-1

If the Process has the Potential to Emit more than five tons per year of any pollutant, and is a New Source, a Control Technology Analysis pursuant to Regulation No. 1125 Section 4 must be conducted and attached to this application.

Additional Information

23. Is There Any Additional Information Pertinent to this Application? ☐ YES ☒ NO

If YES, complete the rest of Question 23.

23.1. Describe:

Silo Application

If you are using this form electronically, press F1 at any time for help

General Information

1. Facility Name: **Indian River Generating Station**
2. Equipment ID Number: **ID 22 Unit 3 Pebble Lime Day Silo 1**
3. Manufacturer: **TBD**
4. Model: **TBD**
5. Serial Number: **TBD**
6. Silo Type: ☒ Tower Silo ☐ Bunker Silo ☐ Other (Specify):
7. Number of Compartments in Silo: **1**
8. Material Stored in Silo:

If there are more than three Materials Stored in the Silo, attach additional copies of this page as needed

	Material	Material Density	Compartment Stored In
8.1.	**Pebble Lime**	**720-1130 kilogram/cubic meter**	**Main**
8.2.		**tons/cubic foot**	
8.3.		**tons/cubic foot**	

Attach a Material Safety Data Sheet (MSDS) for each Material Stored in the Silo.

9. Silo Storage Capacity: **2,800 cubic feet**
10. Silo Loading Method: ☒ Pneumatic ☐ Hydraulic ☐ Mechanical ☐ Vacuum ☐ Other (Specify):
11. Maximum Rate of Silo Loading: **35 tons/hour**
12. Is the Silo Equipped With a Pressure-Vacuum Relief Valve? ☒ YES ☐ NO

If YES, complete the rest of Question 12. If NO, proceed to Question 13.

12.1. Describe the Pressure Relief Valve Settings: **TBD**

13. Is the Silo Equipped With a System That Prevents Overfilling? ☒ YES ☐ NO

If YES, complete the rest of Question 13. If NO, proceed to Question 14.

13.1. Describe the Overfilling Prevention System: **TBD**

General Information

14. Is the Silo Equipped With a Silo Level Monitoring System? ☒ YES ☐ NO

If YES, complete the rest of Question 14. If NO, proceed to Question 15.

14.1. Type of Level Indicator: ☐ Point
☒ Continuous
☐ Other (Specify):

15. Is the Silo Equipped With a Power/Control Panel with a High Level Indicator? ☒ YES ☐ NO

Control Device Information

16. Is an Air Pollution Control Device Used? ☒ YES ☐ NO

If an Air Pollution Control Device is used, complete the rest of Question 16. If not, proceed to Question 17.

16.1. Is Knockout Used? ☐ YES ☒ NO

If YES, complete Form AQM-4.11 and attach it to this application.

16.2. Is a Settling Chamber Used? ☐ YES ☒ NO

If YES, complete Form AQM-4.10 and attach it to this application.

16.3. Is an Inertial or Cyclone Collector Used? ☐ YES ☒ NO

If YES, complete Form AQM-4.5 and attach it to this application.

16.4. Is a Fabric Collector or Baghouse Used? ☒ YES ☐ NO

If YES, complete Form AQM-4.6 and attach it to this application.

16.5. Is a Venturi Scrubber Used? ☐ YES ☒ NO

If YES, complete Form AQM-4.8 and attach it to this application.

16.6. Is an Electrostatic Precipitator Used? ☐ YES ☒ NO

If YES, complete Form AQM-4.7 and attach it to this application.

16.7. Is Any Other Control Device Used? ☐ YES ☒ NO

If YES, attach a copy of the Control Device Manufacturer's Specification Sheets.

If Any Other Control Device is used, complete the rest of Question 16. If not, proceed to Question 17.

16.8. Describe Control Device:

16.9. Pollutants Controlled: ☐ HAPs ☐ PM ☐ PM_{10} ☐ $PM_{2.5}$ ☐ Metals ☐ Other (Specify):

16.10. Control Device Manufacturer:

16.11. Control Device Model:

16.12. Control Device Serial Number:

16.13. Control Device Design Capacity:

16.14. Control Device Removal or Destruction Efficiency:

Stack Information

17. How Does the Process Equipment Vent:
(check all that apply)
☐ Directly to the Atmosphere
☒ Through a Control Device Covered by Forms AQM-4.1 through 4.12
☐ Through Another Control Device Described on This Form

If any of the process equipment vents directly to the atmosphere or through another control device described on this form, proceed to Question 18. If the process equipment vents through a control device, provide the stack parameters on the control device form (AQM-4 Series) and proceed to Question 19.

18. Emission Point Name:

18.1. Stack Height Above Grade: **feet**

18.2. Stack Exit Diameter: **feet**
(Provide Stack Dimensions If Rectangular Stack)

18.3. Is a Stack Cap Present? ☐ YES ☐ NO

18.4. Stack Configuration: ☐ Vertical ☐ Horizontal ☐ Downward-Venting
(check all that apply) ☐ Other (Specify):

18.5. Stack Exit Gas Temperature: **°F**

18.6. Stack Exit Gas Flow Rate: **ACFM**

18.7. Distance to Nearest Property Line: **feet**

18.8. Describe Nearest Obstruction:

18.9. Height of Nearest Obstruction: **feet**

18.10. Distance to Nearest Obstruction: **feet**

18.11. Are Stack Sampling Ports Provided? ☐ YES ☐ NO

Monitoring Information

19. Will Emissions Data be Recorded by a Continuous Emission Monitoring System? ☐ YES ☒ NO

If Yes, attach a copy of the Continuous Emission Monitoring System Manufacturer's Specification Sheets

If YES, complete the rest of Question 19. If NO, proceed to Question 20.

19.1. Pollutants Monitored: ☐ VOCs ☐ HAPs ☐ PM ☐ PM_{10} ☐ $PM_{2.5}$ ☐ NO_X ☐ SO_X ☐ Metals
☐ Other (Specify):

19.2. Describe the Continuous Emission Monitoring System:

19.3. Manufacturer:

19.4. Model:

19.5. Serial Number:

19.6. Will Multiple Emission Units Be Monitored at the Same Point? ☐ YES ☐ NO

If YES, complete the rest of Question 19. If NO, proceed to Question 20.

19.7. Emission Units Monitored:

Monitoring Information

19.8. Will More Than One Emission Unit be Emitting From the Combined Point At Any Time? ☐ YES ☐ NO

If YES, complete the rest of Question 19. If NO, proceed to Question 20.

19.9. Emission Units Emitting Simultaneously:

Visible Emissions Monitoring Information

20. Proposed Technique Used to Monitor Visible Emissions:
☐ Opacity Monitor (COM)
☐ Manual (Method 9)
☒ Manual (Method 22)
☐ Other (Describe):

If an Opacity Monitor (COM) is used, complete the rest of Question 20. If not, proceed to Question 21.

20.1. Describe the Continuous Opacity Monitoring System:

20.2. Manufacturer:

20.3. Model:

20.4. Serial Number:

21. Proposed Frequency of Opacity Monitoring:

Monitoring and Alarm Information

22. Are There Any Alarms You Would Like the Department to Consider When Drafting the Permit? ☐ YES ☒ NO

If YES, complete the rest of Question 22. If NO, proceed to Question 23.

22.1. Describe the System Alarm(s):

If there are more than five alarms, attach additional copies of this page as needed.

	Operating Parameter Monitored	Describe Alarm Trigger	Monitoring Device or Alarm Type	Does the Alarm Initiate an Automated Response?
22.1.1.			☐ Visual ☐ Auditory ☐ Automatic (Remote Monitoring) ☐ Other	☐ NO ☐ YES Describe:
22.1.2.			☐ Visual ☐ Auditory ☐ Automatic (Remote Monitoring) ☐ Other	☐ NO ☐ YES Describe:
22.1.3.			☐ Visual ☐ Auditory ☐ Automatic (Remote Monitoring) ☐ Other	☐ NO ☐ YES Describe:

Monitoring and Alarm Information

22.1.4.			☐ Visual ☐ Auditory ☐ Automatic (Remote Monitoring) ☐ Other	☐ NO ☐ YES Describe:
22.1.5.			☐ Visual ☐ Auditory ☐ Automatic (Remote Monitoring) ☐ Other	☐ NO ☐ YES Describe:

Emissions Information

23. Do You Plan to Take Any Emission Limitations to Avoid Major Source Status, Minor New Source Review, MACT, NSPS, etc.? ☐ YES ☒ NO

If YES, complete the rest of Question 23. If NO, proceed to Question 24.

23.1. Describe Any Proposed Emission Limitations:

Operating Information

24. Do You Plan to Take Any Operating Limitations to Avoid Major Source Status, Minor New Source Review, MACT, NSPS, etc.? ☐ YES ☒ NO

If YES, complete the rest of Question 24. If NO, proceed to Question 25.

24.1. Describe Any Proposed Operating Limitations:

Additional Information

25. Is There Any Additional Information Pertinent to this Application? ☐ YES ☒ NO

If YES, complete the rest of Question 25.

25.1. Describe:

Baghouse Application

If you are using this form electronically, press F1 at any time for help

General Information

1.	Facility Name: **Indian River Generating Station**
2.	Equipment ID Number: **ID 22 Unit 3 Pebble Day Silo 1 Bin Vent Filter**
3.	Manufacturer: **TBD**
4.	Model: **TBD**
5.	Serial Number: **NA**
6.	Is the Baghouse Insulated? ☒ YES ☐ NO
7.	Design Minimum Operating Temperature: **55 °F**
8.	Design Maximum Operating Temperature: **130 °F**
9.	Are Temperature Controls Provided? ☐ YES ☒ NO
If Yes, complete the rest of Question 9. If no, proceed to Question 10.	
9.1.	Describe the Temperature Controls:
10.	Air Flow Through Baghouse: ☐ Forced ☒ Induced ☐ Other (Specify):
11.	Direction of Flow Through Filters: ☐ Inside Out ☒ Outside In
12.	Particulate Removal Efficiency: **99.7 (avg.)** %
Attach the Manufacturer's Specification Sheet for the Baghouse and Particle Size Removal Efficiency Curve and basis of determination.	

Compartment Information

13.	Number of Compartments: **Single**
14.	Number of Filters (Bags) Per Compartment:
15.	Can the Compartments be Isolated for Replacement or Repair? ☐ YES ☐ NO

Gas Stream Information

16.	Maximum Inlet Volumetric Gas Flow Rate: **3,915 acfm at 130 °F**
17.	Maximum Outlet Volumetric Gas Flow Rate: **3,915 acfm at 130 °F**
18.	Dew Point at Maximum Moisture Content of Gas: **70 °F**

Gas Stream Information

19. pH of Gas Handled: **NA (air)**

20. Dust Characteristics: (Check All That Apply)
- ☐ Sticky
- ☐ Wet
- ☐ Corrosive
- ☒ Dry
- ☐ Other (Specify):

Contaminant Information

21. Percent of Each Contaminant in the Waste Gas and Removal Efficiency

If more than five Contaminants are present, attach additional copies of this page as needed.

	Contaminant Name	Contaminant CAS Number	Percent of Waste Gas	Removal Efficiency
21.1.	**PM/PM10**		%	**99.7 (avg.)** %
21.2.			%	%
21.3.			%	%
21.4.			%	%
21.5.			%	%

Fabric Filter (Bag) Information

22. Fabric Type:
- ☒ Felted
- ☐ Woven
- ☐ Felted-Woven
- ☐ Membrane
- ☐ PTFE Membrane
- ☐ Sintered Metal
- ☐ Ceramic Cartridge
- ☐ Other (Specify):

23. Fabric Material: **TBD**

24. Maximum Continuous Filter Operating Temperature: **130 °F**

25. Clean Fabric Permeability: **TBD** scfm/ft^2 at ΔP inches of water

26. Fabric Filter (Bag) Diameter or Width: **TBD inches**

27. Fabric Filter (Bag) Length: **TBD inches**

28. Effective Area Per Filter: **980 (estimated-will depend on final design) square feet**

29. Minimum Effective Air to Cloth Ratio: 4:1 (estimated-will depend on final design) **inches**

30. Maximum Effective Air to Cloth Ratio: 4:1 (estimated-will depend on final design) **inches**

31. Design Pressure Drop Across Baghouse: 6-12 **inches water**

32. Describe Determining Factor Fabric Filter Changing/Replacement: **Bag filter based on visual inspection and/or differential pressure.**

Attach the Manufacturer's Specification Sheet for the Fabric Filters (Bags).

Filter Cleaning Information

33. Filter Cleaning Method: ☐ Manual Cleaning ☐ Bag Collapse ☐ Reverse Air Jet ☐ Mechanical Shakers ☐ Sonic Cleaning ☒ Pulse Jet ☐ Pneumatic Shakers ☐ Reverse Air Flow ☐ Other (Specify):

If Reverse Air Jet or Pulse Jet is used, complete the rest of Question 33. If not, proceed to Question 34.

33.1. Air Pressure: 60-120 (estimated) **psi**

33.2. Describe How Air Is Supplied to System: **From facility compressed air line**

34. Describe How Filter Cleaning Is Initiated: ☐ Manual ☒ Pressure Drop ☐ Timer ☐ Other (Specify):

Hopper Information

35. Is the Hopper Heated? ☐ YES ☐ NO

36. Is there a Hopper Vibrator? ☐ YES ☐ NO

37. Describe How Collected Material is Treated or Disposed of:

Stack Information

38. Emission Point Name: **ID 22**

38.1. Stack Height Above Grade: **85 feet**

38.2. Stack Exit Diameter: **TBD feet**
(Provide Stack Dimensions If Rectangular Stack)

38.3. Is a Stack Cap Present? ☐ YES ☒ NO

38.4. Stack Configuration: ☒ Vertical ☐ Horizontal ☐ Downward-Venting
(check all that apply) ☐ Other (Specify):

38.5. Stack Exit Gas Temperature: **130 °F**

38.6. Stack Exit Gas Flow Rate: **3,915 ACFM**

38.7. Distance to Nearest Property Line: **360 feet**

38.8. Describe Nearest Obstruction: **Unit 3 Fabric Filter**

38.9. Height of Nearest Obstruction: **85 feet**

38.10. Distance to Nearest Obstruction: **5 feet**

Stack Information

38.11. Are Stack Sampling Ports Provided? ☐ YES ☒ NO

Monitoring and Alarm Information

39. Are There Any Alarms You Would Like the Department to Consider When Drafting the Permit? ☐ YES ☒ NO

If YES, complete the rest of Question 39. If NO, proceed to Question 40.

39.1. Describe the System Alarm(s):

If there are more than five alarms, attach additional copies of this page as needed.

	Operating Parameter Monitored	Describe Alarm Trigger	Monitoring Device or Alarm Type	Does the Alarm Initiate an Automated Response?
39.1.1.			☐ Visual ☐ Auditory ☐ Automatic (Remote Monitoring) ☐ Other	☐ NO ☐ YES Describe:
39.1.2.			☐ Visual ☐ Auditory ☐ Automatic (Remote Monitoring) ☐ Other	☐ NO ☐ YES Describe:
39.1.3.			☐ Visual ☐ Auditory ☐ Automatic (Remote Monitoring) ☐ Other	☐ NO ☐ YES Describe:
39.1.4.			☐ Visual ☐ Auditory ☐ Automatic (Remote Monitoring) ☐ Other	☐ NO ☐ YES Describe:
39.1.5.			☐ Visual ☐ Auditory ☐ Automatic (Remote Monitoring) ☐ Other	☐ NO ☐ YES Describe:

Additional Information

40. Is There Any Additional Information Pertinent to this Application? ☐ YES ☒ NO

If YES, complete the rest of Question 40.

40.1. Describe:

Emissions Information Application

If you are using this form electronically, press F1 at any time for help

Process Information

1. Number of Individual Pieces of Process Equipment in Process: **1**
2. Number of Individual Control Devices in Process: **1**

Emissions Information for First Emission Point/Stack

3. Emission Point Name: **ID 22**
4. Equipment ID Number for all Process Equipment and Control Devices Venting Through Emission Point/Stack: **ID 22**
5. Pollutant Emissions

If more than 18 pollutants are emitted at this Emission Point/Stack, attach additional copies of this page as needed.

	Pollutant Name (Specify VOCs and HAPs Individually in 5.10 through 5.18)	CAS Number (Not required for 5.1 through 5.9)	Maximum Uncontrolled Emission Rate at Design Capacity	Maximum Controlled Emission Rate at Design Capacity	Annual Potential to Emit (PTE)	Expected Annual Emissions
5.1.	Particulate Matter (PM)		**100 lbs/hour**	**0.30 lbs/hour**	**1.3** tons/year	**1.3** tons/year
5.2.	PM_{10}		**85 lbs/hour**	**0.26 lbs/hour**	**1.1** tons/year	**1.1** tons/year
5.3.	$PM_{2.5}$		**30 lbs/hour**	**0.09 lbs/hour**	**0.4** tons/year	**0.4** tons/year
5.4.	Sulfur Oxides (SO_X)		**lbs/hour**	**lbs/hour**	tons/year	tons/year
5.5.	Nitrogen Oxides (NO_X)		**lbs/hour**	**lbs/hour**	tons/year	tons/year
5.6.	Carbon Monoxide (CO)		**lbs/hour**	**lbs/hour**	tons/year	tons/year
5.7.	Lead		**lbs/hour**	**lbs/hour**	tons/year	tons/year
5.8.	Total Volatile Organic Compounds (VOCs)		**lbs/hour**	**lbs/hour**	tons/year	tons/year

Emissions Information for First Emission Point/Stack

5.9.	Total Hazardous Air Pollutants (HAPs)		**lbs/hour**	**lbs/hour**	tons/year	tons/year
5.10.			**lbs/hour**	**lbs/hour**	tons/year	tons/year
5.11.			**lbs/hour**	**lbs/hour**	tons/year	tons/year
5.12.			**lbs/hour**	**lbs/hour**	tons/year	tons/year
5.13.			**lbs/hour**	**lbs/hour**	tons/year	tons/year
5.14.			**lbs/hour**	**lbs/hour**	tons/year	tons/year
5.15.			**lbs/hour**	**lbs/hour**	tons/year	tons/year
5.16.			**lbs/hour**	**lbs/hour**	tons/year	tons/year
5.17			**lbs/hour**	**lbs/hour**	tons/year	tons/year
5.18.			**lbs/hour**	**lbs/hour**	tons/year	tons/year

6. Provide Any Additional Information Necessary to Understanding the Emission Rates Provided Above:

Attach the Basis of Determination or Calculations for each Emission Rate provided above.

Emissions Information for Second Emission Point/Stack

7. Emission Point Name:

8. Equipment ID Number for all Process Equipment and Control Devices Venting Through Emission Point/Stack:

9. Pollutant Emissions

If more than 18 pollutants are emitted at this Emission Point/Stack, attach additional copies of this page as needed.

Pollutant Name (Specify VOCs and HAPs Individually in 9.10 through 9.18)	CAS Number (Not required for 9.1 through 9.9)	Maximum Uncontrolled Emission Rate at Design Capacity	Maximum Controlled Emission Rate at Design Capacity	Annual Potential to Emit (PTE)	Expected Annual Emissions

Emissions Information for Second Emission Point/Stack

9.1.	Particulate Matter (PM)		**lbs/hour**	**lbs/hour**	tons/year	tons/year
9.2.	PM_{10}		**lbs/hour**	**lbs/hour**	tons/year	tons/year
9.3.	$PM_{2.5}$		**lbs/hour**	**lbs/hour**	tons/year	tons/year
9.4.	Sulfur Oxides (SO_X)		**lbs/hour**	**lbs/hour**	tons/year	tons/year
9.5.	Nitrogen Oxides (NO_X)		**lbs/hour**	**lbs/hour**	tons/year	tons/year
9.6.	Carbon Monoxide (CO)		**lbs/hour**	**lbs/hour**	tons/year	tons/year
9.7.	Lead		**lbs/hour**	**lbs/hour**	tons/year	tons/year
9.8.	Total Volatile Organic Compounds (VOCs)		**lbs/hour**	**lbs/hour**	tons/year	tons/year
9.9.	Total Hazardous Air Pollutants (HAPs)		**lbs/hour**	**lbs/hour**	tons/year	tons/year
9.10.			**lbs/hour**	**lbs/hour**	tons/year	tons/year
9.11.			**lbs/hour**	**lbs/hour**	tons/year	tons/year
9.12.			**lbs/hour**	**lbs/hour**	tons/year	tons/year
9.13.			**lbs/hour**	**lbs/hour**	tons/year	tons/year
9.14.			**lbs/hour**	**lbs/hour**	tons/year	tons/year
9.15.			**lbs/hour**	**lbs/hour**	tons/year	tons/year
9.16.			**lbs/hour**	**lbs/hour**	tons/year	tons/year
9.17			**lbs/hour**	**lbs/hour**	tons/year	tons/year
9.18.			**lbs/hour**	**lbs/hour**	tons/year	tons/year

10. Provide Any Additional Information Necessary to Understanding the Emission Rates Provided Above:

Attach the Basis of Determination or Calculations for each Emission Rate provided above.

Emissions Information for Third Emission Point/Stack

11. Emission Point Name:

12. Equipment ID Number for all Process Equipment and Control Devices Venting Through Emission Point/Stack:

13. Pollutant Emissions

If more than 18 pollutants are emitted at this Emission Point/Stack, attach additional copies of this page as needed.

	Pollutant Name (Specify VOCs and HAPs Individually in 13.10 through 13.18)	CAS Number (Not required for 13.1 through 13.9)	Maximum Uncontrolled Emission Rate at Design Capacity	Maximum Controlled Emission Rate at Design Capacity	Annual Potential to Emit (PTE)	Expected Annual Emissions
13.1.	Particulate Matter (PM)		**lbs/hour**	**lbs/hour**	tons/year	tons/year
13.2.	PM_{10}		**lbs/hour**	**lbs/hour**	tons/year	tons/year
13.3.	$PM_{2.5}$		**lbs/hour**	**lbs/hour**	tons/year	tons/year
13.4.	Sulfur Oxides (SO_X)		**lbs/hour**	**lbs/hour**	tons/year	tons/year
13.5.	Nitrogen Oxides (NO_X)		**lbs/hour**	**lbs/hour**	tons/year	tons/year
13.6.	Carbon Monoxide (CO)		**lbs/hour**	**lbs/hour**	tons/year	tons/year
13.7.	Lead		**lbs/hour**	**lbs/hour**	tons/year	tons/year
13.8.	Total Volatile Organic Compounds (VOCs)		**lbs/hour**	**lbs/hour**	tons/year	tons/year
13.9.	Total Hazardous Air Pollutants (HAPs)		**lbs/hour**	**lbs/hour**	tons/year	tons/year
13.10.			**lbs/hour**	**lbs/hour**	tons/year	tons/year
13.11.			**lbs/hour**	**lbs/hour**	tons/year	tons/year
13.12.			**lbs/hour**	**lbs/hour**	tons/year	tons/year
13.13.			**lbs/hour**	**lbs/hour**	tons/year	tons/year
13.14.			**lbs/hour**	**lbs/hour**	tons/year	tons/year

Emissions Information for Third Emission Point/Stack

13.15.		**lbs/hour**	**lbs/hour**	tons/year	tons/year
13.16.		**lbs/hour**	**lbs/hour**	tons/year	tons/year
13.17		**lbs/hour**	**lbs/hour**	tons/year	tons/year
13.18.		**lbs/hour**	**lbs/hour**	tons/year	tons/year

14. Provide Any Additional Information Necessary to Understanding the Emission Rates Provided Above:

Attach the Basis of Determination or Calculations for each Emission Rate provided above.

Emissions Information for Fourth Emission Point/Stack

15. Emission Point Name:

16. Equipment ID Number for all Process Equipment and Control Devices Venting Through Emission Point/Stack:

17. Pollutant Emissions

If more than 18 pollutants are emitted at this Emission Point/Stack, attach additional copies of this page as needed.

	Pollutant Name (Specify VOCs and HAPs Individually in 17.10 through 17.18)	CAS Number (Not required for 17.1 through 17.9)	Maximum Uncontrolled Emission Rate at Design Capacity	Maximum Controlled Emission Rate at Design Capacity	Annual Potential to Emit (PTE)	Expected Annual Emissions
17.1.	Particulate Matter (PM)		**lbs/hour**	**lbs/hour**	tons/year	tons/year
17.2.	PM_{10}		**lbs/hour**	**lbs/hour**	tons/year	tons/year
17.3.	$PM_{2.5}$		**lbs/hour**	**lbs/hour**	tons/year	tons/year
17.4.	Sulfur Oxides (SO_X)		**lbs/hour**	**lbs/hour**	tons/year	tons/year
17.5.	Nitrogen Oxides (NO_X)		**lbs/hour**	**lbs/hour**	tons/year	tons/year
17.6.	Carbon Monoxide (CO)		**lbs/hour**	**lbs/hour**	tons/year	tons/year

Emissions Information for Fourth Emission Point/Stack

17.7.	Volatile Organic Compounds (VOCs)		lbs/hour	lbs/hour	tons/year	tons/year
17.8.	Lead		lbs/hour	lbs/hour	tons/year	tons/year
17.9.			lbs/hour	lbs/hour	tons/year	tons/year
17.10.			lbs/hour	lbs/hour	tons/year	tons/year
17.11.			lbs/hour	lbs/hour	tons/year	tons/year
17.12.			lbs/hour	lbs/hour	tons/year	tons/year
17.13.			lbs/hour	lbs/hour	tons/year	tons/year
17.14.			lbs/hour	lbs/hour	tons/year	tons/year
17.15.			lbs/hour	lbs/hour	tons/year	tons/year
17.16.			lbs/hour	lbs/hour	tons/year	tons/year
17.17			lbs/hour	lbs/hour	tons/year	tons/year
17.18.			lbs/hour	lbs/hour	tons/year	tons/year

18. Provide Any Additional Information Necessary to Understanding the Emission Rates Provided Above:

Attach the Basis of Determination or Calculations for each Emission Rate provided above.

If there are more than four Emission Points/Stacks, attach additional copies of this form as needed.

Overall Process Emissions

19. Pollutant Emissions

If more than 18 pollutants are emitted from this Process, attach additional copies of this page as needed.

Pollutant Name (Specify VOCs and HAPs Individually in 19.10 through 19.18)	CAS Number (Not required for 19.1 through 19.9)	Maximum Uncontrolled Emission Rate at Design Capacity	Maximum Controlled Emission Rate at Design Capacity	Annual Potential to Emit (PTE)	Expected Annual Emissions

Overall Process Emissions

19.1.	Particulate Matter (PM)		**100 lbs/hour**	**0.30 lbs/hour**	**1.3** tons/year	**1.3** tons/year
19.2.	PM_{10}		**85 lbs/hour**	**0.26 lbs/hour**	**1.1** tons/year	**1.1** tons/year
19.3.	$PM_{2.5}$		**30 lbs/hour**	**0.09 lbs/hour**	**0.4** tons/year	**0.4** tons/year
19.4.	Sulfur Oxides (SO_X)		**lbs/hour**	**lbs/hour**	tons/year	tons/year
19.5.	Nitrogen Oxides (NO_X)		**lbs/hour**	**lbs/hour**	tons/year	tons/year
19.6.	Carbon Monoxide (CO)		**lbs/hour**	**lbs/hour**	tons/year	tons/year
19.7.	Lead		**lbs/hour**	**lbs/hour**	tons/year	tons/year
19.8.	Total Volatile Organic Compounds (VOCs)		**lbs/hour**	**lbs/hour**	tons/year	tons/year
19.9.	Total Hazardous Air Pollutants (HAPs)		**lbs/hour**	**lbs/hour**	tons/year	tons/year
19.10.			**lbs/hour**	**lbs/hour**	tons/year	tons/year
19.11.			**lbs/hour**	**lbs/hour**	tons/year	tons/year
19.12.			**lbs/hour**	**lbs/hour**	tons/year	tons/year
19.13.			**lbs/hour**	**lbs/hour**	tons/year	tons/year
19.14.			**lbs/hour**	**lbs/hour**	tons/year	tons/year
19.15.			**lbs/hour**	**lbs/hour**	tons/year	tons/year
19.16.			**lbs/hour**	**lbs/hour**	tons/year	tons/year
19.17			**lbs/hour**	**lbs/hour**	tons/year	tons/year
19.18.			**lbs/hour**	**lbs/hour**	tons/year	tons/year

20. Provide Any Additional Information Necessary to Understanding the Emission Rates Provided Above:

Attach the Basis of Determination or Calculations for each Emission Rate provided above.

Minor New Source Review Information

21. Does the Process Have the Potential to Emit More Than Five Tons Per Year of Any Pollutant? ☐ YES ☒ NO

22. Is the Source New or Existing? ☒ NEW ☐ EXISTING
See Question 11 of AQM-1

If the Process has the Potential to Emit more than five tons per year of any pollutant, and is a New Source, a Control Technology Analysis pursuant to Regulation No. 1125 Section 4 must be conducted and attached to this application.

Additional Information

23. Is There Any Additional Information Pertinent to this Application? ☐ YES ☒ NO

If YES, complete the rest of Question 23.

23.1. Describe:

Silo Application

If you are using this form electronically, press F1 at any time for help

General Information

1. Facility Name: **Indian River Generating Station**
2. Equipment ID Number: **ID 23 Unit 3 Pebble Lime Day Silo 2**
3. Manufacturer: **TBD**
4. Model: **TBD**
5. Serial Number: **TBD**
6. Silo Type: ☒ Tower Silo
   ☐ Bunker Silo
   ☐ Other (Specify):
7. Number of Compartments in Silo: **1**
8. Material Stored in Silo:

If there are more than three Materials Stored in the Silo, attach additional copies of this page as needed

	Material	Material Density	Compartment Stored In
8.1.	**Pebble Lime**	**720-1130 kilogram/cubic meter**	**Main**
8.2.		**tons/cubic foot**	
8.3.		**tons/cubic foot**	

Attach a Material Safety Data Sheet (MSDS) for each Material Stored in the Silo.

9. Silo Storage Capacity: **2,800 cubic feet**
10. Silo Loading Method: ☒ Pneumatic ☐ Vacuum
    ☐ Hydraulic ☐ Other (Specify):
    ☐ Mechanical
11. Maximum Rate of Silo Loading: **35 tons/hour**
12. Is the Silo Equipped With a Pressure-Vacuum Relief Valve? ☒ YES ☐ NO

If YES, complete the rest of Question 12. If NO, proceed to Question 13.

12.1. Describe the Pressure Relief Valve Settings: **TBD**

13. Is the Silo Equipped With a System That Prevents Overfilling? ☒ YES ☐ NO

If YES, complete the rest of Question 13. If NO, proceed to Question 14.

13.1. Describe the Overfilling Prevention System: **TBD**

General Information

14. Is the Silo Equipped With a Silo Level Monitoring System? ☒ YES ☐ NO

If YES, complete the rest of Question 14. If NO, proceed to Question 15.

14.1. Type of Level Indicator: ☐ Point
☒ Continuous
☐ Other (Specify):

15. Is the Silo Equipped With a Power/Control Panel with a High Level Indicator? ☒ YES ☐ NO

Control Device Information

16. Is an Air Pollution Control Device Used? ☒ YES ☐ NO

If an Air Pollution Control Device is used, complete the rest of Question 16. If not, proceed to Question 17.

16.1. Is Knockout Used? ☐ YES ☒ NO

If YES, complete Form AQM-4.11 and attach it to this application.

16.2. Is a Settling Chamber Used? ☐ YES ☒ NO

If YES, complete Form AQM-4.10 and attach it to this application.

16.3. Is an Inertial or Cyclone Collector Used? ☐ YES ☒ NO

If YES, complete Form AQM-4.5 and attach it to this application.

16.4. Is a Fabric Collector or Baghouse Used? ☒ YES ☐ NO

If YES, complete Form AQM-4.6 and attach it to this application.

16.5. Is a Venturi Scrubber Used? ☐ YES ☒ NO

If YES, complete Form AQM-4.8 and attach it to this application.

16.6. Is an Electrostatic Precipitator Used? ☐ YES ☒ NO

If YES, complete Form AQM-4.7 and attach it to this application.

16.7. Is Any Other Control Device Used? ☐ YES ☒ NO

If YES, attach a copy of the Control Device Manufacturer's Specification Sheets.

If Any Other Control Device is used, complete the rest of Question 16. If not, proceed to Question 17.

16.8. Describe Control Device:

16.9. Pollutants Controlled: ☐ HAPs ☐ PM ☐ PM_{10} ☐ $PM_{2.5}$ ☐ Metals ☐ Other (Specify):

16.10. Control Device Manufacturer:

16.11. Control Device Model:

16.12. Control Device Serial Number:

16.13. Control Device Design Capacity:

16.14. Control Device Removal or Destruction Efficiency:

Stack Information

17. How Does the Process Equipment Vent:
(check all that apply)
☐ Directly to the Atmosphere
☒ Through a Control Device Covered by Forms AQM-4.1 through 4.12
☐ Through Another Control Device Described on This Form

If any of the process equipment vents directly to the atmosphere or through another control device described on this form, proceed to Question 18. If the process equipment vents through a control device, provide the stack parameters on the control device form (AQM-4 Series) and proceed to Question 19.

18. Emission Point Name:

18.1. Stack Height Above Grade: **feet**

18.2. Stack Exit Diameter: **feet**
(Provide Stack Dimensions If Rectangular Stack)

18.3. Is a Stack Cap Present? ☐ YES ☐ NO

18.4. Stack Configuration: ☐ Vertical ☐ Horizontal ☐ Downward-Venting
(check all that apply) ☐ Other (Specify):

18.5. Stack Exit Gas Temperature: **°F**

18.6. Stack Exit Gas Flow Rate: **ACFM**

18.7. Distance to Nearest Property Line: **feet**

18.8. Describe Nearest Obstruction:

18.9. Height of Nearest Obstruction: **feet**

18.10. Distance to Nearest Obstruction: **feet**

18.11. Are Stack Sampling Ports Provided? ☐ YES ☐ NO

Monitoring Information

19. Will Emissions Data be Recorded by a Continuous Emission Monitoring System? ☐ YES ☒ NO

If Yes, attach a copy of the Continuous Emission Monitoring System Manufacturer's Specification Sheets

If YES, complete the rest of Question 19. If NO, proceed to Question 20.

19.1. Pollutants Monitored: ☐ VOCs ☐ HAPs ☐ PM ☐ PM_{10} ☐ $PM_{2.5}$ ☐ NO_X ☐ SO_X ☐ Metals
☐ Other (Specify):

19.2. Describe the Continuous Emission Monitoring System:

19.3. Manufacturer:

19.4. Model:

19.5. Serial Number:

19.6. Will Multiple Emission Units Be Monitored at the Same Point? ☐ YES ☐ NO

If YES, complete the rest of Question 19. If NO, proceed to Question 20.

19.7. Emission Units Monitored:

Monitoring Information

19.8. Will More Than One Emission Unit be Emitting From the Combined Point At Any Time?	☐ YES ☐ NO
If YES, complete the rest of Question 19. If NO, proceed to Question 20.	
19.9. Emission Units Emitting Simultaneously:	

Visible Emissions Monitoring Information

20. Proposed Technique Used to Monitor Visible Emissions:	☐ Opacity Monitor (COM) ☐ Manual (Method 9) ☒ Manual (Method 22) ☐ Other (Describe):
If an Opacity Monitor (COM) is used, complete the rest of Question 20. If not, proceed to Question 21.	
20.1. Describe the Continuous Opacity Monitoring System:	
20.2. Manufacturer:	
20.3. Model:	
20.4. Serial Number:	
21. Proposed Frequency of Opacity Monitoring:	

Monitoring and Alarm Information

22. Are There Any Alarms You Would Like the Department to Consider When Drafting the Permit?	☐ YES ☒ NO
If YES, complete the rest of Question 22. If NO, proceed to Question 23.	
22.1. Describe the System Alarm(s):	

If there are more than five alarms, attach additional copies of this page as needed.

	Operating Parameter Monitored	Describe Alarm Trigger	Monitoring Device or Alarm Type	Does the Alarm Initiate an Automated Response?
22.1.1.			☐ Visual ☐ Auditory ☐ Automatic (Remote Monitoring) ☐ Other	☐ NO ☐ YES Describe:
22.1.2.			☐ Visual ☐ Auditory ☐ Automatic (Remote Monitoring) ☐ Other	☐ NO ☐ YES Describe:
22.1.3.			☐ Visual ☐ Auditory ☐ Automatic (Remote Monitoring) ☐ Other	☐ NO ☐ YES Describe:

Monitoring and Alarm Information

22.1.4.			☐ Visual ☐ Auditory ☐ Automatic (Remote Monitoring) ☐ Other	☐ NO ☐ YES Describe:
22.1.5.			☐ Visual ☐ Auditory ☐ Automatic (Remote Monitoring) ☐ Other	☐ NO ☐ YES Describe:

Emissions Information

23. Do You Plan to Take Any Emission Limitations to Avoid Major Source Status, Minor New Source Review, MACT, NSPS, etc.? ☐ YES ☒ NO

If YES, complete the rest of Question 23. If NO, proceed to Question 24.

23.1. Describe Any Proposed Emission Limitations:

Operating Information

24. Do You Plan to Take Any Operating Limitations to Avoid Major Source Status, Minor New Source Review, MACT, NSPS, etc.? ☐ YES ☒ NO

If YES, complete the rest of Question 24. If NO, proceed to Question 25.

24.1. Describe Any Proposed Operating Limitations:

Additional Information

25. Is There Any Additional Information Pertinent to this Application? ☐ YES ☒ NO

If YES, complete the rest of Question 25.

25.1. Describe:

Baghouse Application

If you are using this form electronically, press F1 at any time for help

General Information

1.	Facility Name: **Indian River Generating Station**
2.	Equipment ID Number: **ID 23 Unit 3 Pebble Day Silo 2 Bin Vent Filter**
3.	Manufacturer: **TBD**
4.	Model: **TBD**
5.	Serial Number: **NA**
6.	Is the Baghouse Insulated? ☒ YES ☐ NO
7.	Design Minimum Operating Temperature: **55 °F**
8.	Design Maximum Operating Temperature: **130 °F**
9.	Are Temperature Controls Provided? ☐ YES ☒ NO
If Yes, complete the rest of Question 9. If no, proceed to Question 10.	
9.1.	Describe the Temperature Controls:
10.	Air Flow Through Baghouse: ☐ Forced ☒ Induced ☐ Other (Specify):
11.	Direction of Flow Through Filters: ☐ Inside Out ☒ Outside In
12.	Particulate Removal Efficiency: **99.7 (avg.)** %
Attach the Manufacturer's Specification Sheet for the Baghouse and Particle Size Removal Efficiency Curve and basis of determination.	

Compartment Information

13.	Number of Compartments: **Single**
14.	Number of Filters (Bags) Per Compartment:
15.	Can the Compartments be Isolated for Replacement or Repair? ☐ YES ☐ NO

Gas Stream Information

16.	Maximum Inlet Volumetric Gas Flow Rate: **3,915 acfm at 130 °F**
17.	Maximum Outlet Volumetric Gas Flow Rate: **3,915 acfm at 130 °F**
18.	Dew Point at Maximum Moisture Content of Gas: **70 °F**

Gas Stream Information

19. pH of Gas Handled: **NA (air)**

20. Dust Characteristics: (Check All That Apply)
- ☐ Sticky
- ☐ Wet
- ☐ Corrosive
- ☒ Dry
- ☐ Other (Specify):

Contaminant Information

21. Percent of Each Contaminant in the Waste Gas and Removal Efficiency

If more than five Contaminants are present, attach additional copies of this page as needed.

	Contaminant Name	Contaminant CAS Number	Percent of Waste Gas	Removal Efficiency
21.1.	**PM/PM10**		%	**99.7 (avg.)** %
21.2.			%	%
21.3.			%	%
21.4.			%	%
21.5.			%	%

Fabric Filter (Bag) Information

22. Fabric Type:
- ☒ Felted
- ☐ Woven
- ☐ Felted-Woven
- ☐ Membrane
- ☐ PTFE Membrane
- ☐ Sintered Metal
- ☐ Ceramic Cartridge
- ☐ Other (Specify):

23. Fabric Material: **TBD**

24. Maximum Continuous Filter Operating Temperature: **130 °F**

25. Clean Fabric Permeability: **TBD** scfm/ft^2 at ΔP inches of water

26. Fabric Filter (Bag) Diameter or Width: **TBD inches**

27. Fabric Filter (Bag) Length: **TBD inches**

28. Effective Area Per Filter: **980 (estimated-will depend on final design) square feet**

29. Minimum Effective Air to Cloth Ratio: 4:1 (estimated-will depend on final design) **inches**

30. Maximum Effective Air to Cloth Ratio: 4:1 (estimated-will depend on final design) **inches**

31. Design Pressure Drop Across Baghouse: 6-12 **inches water**

32. Describe Determining Factor Fabric Filter Changing/Replacement: **Bag filter based on visual inspection and/or differential pressure.**

Attach the Manufacturer's Specification Sheet for the Fabric Filters (Bags).

Filter Cleaning Information

33. Filter Cleaning Method: ☐ Manual Cleaning ☐ Mechanical Shakers ☐ Pneumatic Shakers ☐ Bag Collapse ☐ Sonic Cleaning ☐ Reverse Air Flow ☐ Reverse Air Jet ☒ Pulse Jet ☐ Other (Specify):

If Reverse Air Jet or Pulse Jet is used, complete the rest of Question 33. If not, proceed to Question 34.

33.1. Air Pressure: 60-120 (estimated) **psi**

33.2. Describe How Air Is Supplied to System: **From facility compressed air line**

34. Describe How Filter Cleaning Is Initiated: ☐ Manual ☐ Timer ☒ Pressure Drop ☐ Other (Specify):

Hopper Information

35. Is the Hopper Heated? ☐ YES ☐ NO

36. Is there a Hopper Vibrator? ☐ YES ☐ NO

37. Describe How Collected Material is Treated or Disposed of:

Stack Information

38. Emission Point Name: **ID 23**

38.1. Stack Height Above Grade: **85 feet**

38.2. Stack Exit Diameter: **TBD feet**
(Provide Stack Dimensions If Rectangular Stack)

38.3. Is a Stack Cap Present? ☐ YES ☒ NO

38.4. Stack Configuration: ☒ Vertical ☐ Horizontal ☐ Downward-Venting
(check all that apply) ☐ Other (Specify):

38.5. Stack Exit Gas Temperature: **130 °F**

38.6. Stack Exit Gas Flow Rate: **3,915 ACFM**

38.7. Distance to Nearest Property Line: **360 feet**

38.8. Describe Nearest Obstruction: **Unit 3 Fabric Filter**

38.9. Height of Nearest Obstruction: **85 feet**

38.10. Distance to Nearest Obstruction: **5 feet**

Stack Information

38.11. Are Stack Sampling Ports Provided? ☐ YES ☒ NO

Monitoring and Alarm Information

39. Are There Any Alarms You Would Like the Department to Consider When Drafting the Permit? ☐ YES ☒ NO

If YES, complete the rest of Question 39. If NO, proceed to Question 40.

39.1. Describe the System Alarm(s):

If there are more than five alarms, attach additional copies of this page as needed.

	Operating Parameter Monitored	Describe Alarm Trigger	Monitoring Device or Alarm Type	Does the Alarm Initiate an Automated Response?
39.1.1.			☐ Visual ☐ Auditory ☐ Automatic (Remote Monitoring) ☐ Other	☐ NO ☐ YES Describe:
39.1.2.			☐ Visual ☐ Auditory ☐ Automatic (Remote Monitoring) ☐ Other	☐ NO ☐ YES Describe:
39.1.3.			☐ Visual ☐ Auditory ☐ Automatic (Remote Monitoring) ☐ Other	☐ NO ☐ YES Describe:
39.1.4.			☐ Visual ☐ Auditory ☐ Automatic (Remote Monitoring) ☐ Other	☐ NO ☐ YES Describe:
39.1.5.			☐ Visual ☐ Auditory ☐ Automatic (Remote Monitoring) ☐ Other	☐ NO ☐ YES Describe:

Additional Information

40. Is There Any Additional Information Pertinent to this Application? ☐ YES ☒ NO

If YES, complete the rest of Question 40.

40.1. Describe:

Emissions Information Application

If you are using this form electronically, press F1 at any time for help

Process Information

1.	Number of Individual Pieces of Process Equipment in Process: **1**
2.	Number of Individual Control Devices in Process: **1**

Emissions Information for First Emission Point/Stack

3.	Emission Point Name: **ID 23**
4.	Equipment ID Number for all Process Equipment and Control Devices Venting Through Emission Point/Stack: **ID 23**
5.	Pollutant Emissions

If more than 18 pollutants are emitted at this Emission Point/Stack, attach additional copies of this page as needed.

	Pollutant Name (Specify VOCs and HAPs Individually in 5.10 through 5.18)	CAS Number (Not required for 5.1 through 5.9)	Maximum Uncontrolled Emission Rate at Design Capacity	Maximum Controlled Emission Rate at Design Capacity	Annual Potential to Emit (PTE)	Expected Annual Emissions
5.1.	Particulate Matter (PM)		**100 lbs/hour**	**0.30 lbs/hour**	**1.3** tons/year	**1.3** tons/year
5.2.	PM_{10}		**85 lbs/hour**	**0.26 lbs/hour**	**1.1** tons/year	**1.1** tons/year
5.3.	$PM_{2.5}$		**30 lbs/hour**	**0.09 lbs/hour**	**0.4** tons/year	**0.4** tons/year
5.4.	Sulfur Oxides (SO_X)		**lbs/hour**	**lbs/hour**	tons/year	tons/year
5.5.	Nitrogen Oxides (NO_X)		**lbs/hour**	**lbs/hour**	tons/year	tons/year
5.6.	Carbon Monoxide (CO)		**lbs/hour**	**lbs/hour**	tons/year	tons/year
5.7.	Lead		**lbs/hour**	**lbs/hour**	tons/year	tons/year
5.8.	Total Volatile Organic Compounds (VOCs)		**lbs/hour**	**lbs/hour**	tons/year	tons/year

Emissions Information for First Emission Point/Stack

5.9.	Total Hazardous Air Pollutants (HAPs)		**lbs/hour**	**lbs/hour**	tons/year	tons/year
5.10.			**lbs/hour**	**lbs/hour**	tons/year	tons/year
5.11.			**lbs/hour**	**lbs/hour**	tons/year	tons/year
5.12.			**lbs/hour**	**lbs/hour**	tons/year	tons/year
5.13.			**lbs/hour**	**lbs/hour**	tons/year	tons/year
5.14.			**lbs/hour**	**lbs/hour**	tons/year	tons/year
5.15.			**lbs/hour**	**lbs/hour**	tons/year	tons/year
5.16.			**lbs/hour**	**lbs/hour**	tons/year	tons/year
5.17			**lbs/hour**	**lbs/hour**	tons/year	tons/year
5.18.			**lbs/hour**	**lbs/hour**	tons/year	tons/year

6. Provide Any Additional Information Necessary to Understanding the Emission Rates Provided Above:

Attach the Basis of Determination or Calculations for each Emission Rate provided above.

Emissions Information for Second Emission Point/Stack

7. Emission Point Name:

8. Equipment ID Number for all Process Equipment and Control Devices Venting Through Emission Point/Stack:

9. Pollutant Emissions

If more than 18 pollutants are emitted at this Emission Point/Stack, attach additional copies of this page as needed.

Pollutant Name (Specify VOCs and HAPs Individually in 9.10 through 9.18)	CAS Number (Not required for 9.1 through 9.9)	Maximum Uncontrolled Emission Rate at Design Capacity	Maximum Controlled Emission Rate at Design Capacity	Annual Potential to Emit (PTE)	Expected Annual Emissions

Emissions Information for Second Emission Point/Stack

9.1.	Particulate Matter (PM)		**lbs/hour**	**lbs/hour**	tons/year	tons/year
9.2.	PM_{10}		**lbs/hour**	**lbs/hour**	tons/year	tons/year
9.3.	$PM_{2.5}$		**lbs/hour**	**lbs/hour**	tons/year	tons/year
9.4.	Sulfur Oxides (SO_X)		**lbs/hour**	**lbs/hour**	tons/year	tons/year
9.5.	Nitrogen Oxides (NO_X)		**lbs/hour**	**lbs/hour**	tons/year	tons/year
9.6.	Carbon Monoxide (CO)		**lbs/hour**	**lbs/hour**	tons/year	tons/year
9.7.	Lead		**lbs/hour**	**lbs/hour**	tons/year	tons/year
9.8.	Total Volatile Organic Compounds (VOCs)		**lbs/hour**	**lbs/hour**	tons/year	tons/year
9.9.	Total Hazardous Air Pollutants (HAPs)		**lbs/hour**	**lbs/hour**	tons/year	tons/year
9.10.			**lbs/hour**	**lbs/hour**	tons/year	tons/year
9.11.			**lbs/hour**	**lbs/hour**	tons/year	tons/year
9.12.			**lbs/hour**	**lbs/hour**	tons/year	tons/year
9.13.			**lbs/hour**	**lbs/hour**	tons/year	tons/year
9.14.			**lbs/hour**	**lbs/hour**	tons/year	tons/year
9.15.			**lbs/hour**	**lbs/hour**	tons/year	tons/year
9.16.			**lbs/hour**	**lbs/hour**	tons/year	tons/year
9.17			**lbs/hour**	**lbs/hour**	tons/year	tons/year
9.18.			**lbs/hour**	**lbs/hour**	tons/year	tons/year

10. Provide Any Additional Information Necessary to Understanding the Emission Rates Provided Above:

Attach the Basis of Determination or Calculations for each Emission Rate provided above.

Emissions Information for Third Emission Point/Stack

11. Emission Point Name:

12. Equipment ID Number for all Process Equipment and Control Devices Venting Through Emission Point/Stack:

13. Pollutant Emissions

If more than 18 pollutants are emitted at this Emission Point/Stack, attach additional copies of this page as needed.

	Pollutant Name (Specify VOCs and HAPs Individually in 13.10 through 13.18)	CAS Number (Not required for 13.1 through 13.9)	Maximum Uncontrolled Emission Rate at Design Capacity	Maximum Controlled Emission Rate at Design Capacity	Annual Potential to Emit (PTE)	Expected Annual Emissions
13.1.	Particulate Matter (PM)		**lbs/hour**	**lbs/hour**	tons/year	tons/year
13.2.	PM_{10}		**lbs/hour**	**lbs/hour**	tons/year	tons/year
13.3.	$PM_{2.5}$		**lbs/hour**	**lbs/hour**	tons/year	tons/year
13.4.	Sulfur Oxides (SO_X)		**lbs/hour**	**lbs/hour**	tons/year	tons/year
13.5.	Nitrogen Oxides (NO_X)		**lbs/hour**	**lbs/hour**	tons/year	tons/year
13.6.	Carbon Monoxide (CO)		**lbs/hour**	**lbs/hour**	tons/year	tons/year
13.7.	Lead		**lbs/hour**	**lbs/hour**	tons/year	tons/year
13.8.	Total Volatile Organic Compounds (VOCs)		**lbs/hour**	**lbs/hour**	tons/year	tons/year
13.9.	Total Hazardous Air Pollutants (HAPs)		**lbs/hour**	**lbs/hour**	tons/year	tons/year
13.10.			**lbs/hour**	**lbs/hour**	tons/year	tons/year
13.11.			**lbs/hour**	**lbs/hour**	tons/year	tons/year
13.12.			**lbs/hour**	**lbs/hour**	tons/year	tons/year
13.13.			**lbs/hour**	**lbs/hour**	tons/year	tons/year
13.14.			**lbs/hour**	**lbs/hour**	tons/year	tons/year

Emissions Information for Third Emission Point/Stack

13.15.		**lbs/hour**	**lbs/hour**	tons/year	tons/year
13.16.		**lbs/hour**	**lbs/hour**	tons/year	tons/year
13.17		**lbs/hour**	**lbs/hour**	tons/year	tons/year
13.18.		**lbs/hour**	**lbs/hour**	tons/year	tons/year

14. Provide Any Additional Information Necessary to Understanding the Emission Rates Provided Above:

Attach the Basis of Determination or Calculations for each Emission Rate provided above.

Emissions Information for Fourth Emission Point/Stack

15. Emission Point Name:

16. Equipment ID Number for all Process Equipment and Control Devices Venting Through Emission Point/Stack:

17. Pollutant Emissions

If more than 18 pollutants are emitted at this Emission Point/Stack, attach additional copies of this page as needed.

	Pollutant Name (Specify VOCs and HAPs Individually in 17.10 through 17.18)	CAS Number (Not required for 17.1 through 17.9)	Maximum Uncontrolled Emission Rate at Design Capacity	Maximum Controlled Emission Rate at Design Capacity	Annual Potential to Emit (PTE)	Expected Annual Emissions
17.1.	Particulate Matter (PM)		**lbs/hour**	**lbs/hour**	tons/year	tons/year
17.2.	PM_{10}		**lbs/hour**	**lbs/hour**	tons/year	tons/year
17.3.	$PM_{2.5}$		**lbs/hour**	**lbs/hour**	tons/year	tons/year
17.4.	Sulfur Oxides (SO_X)		**lbs/hour**	**lbs/hour**	tons/year	tons/year
17.5.	Nitrogen Oxides (NO_X)		**lbs/hour**	**lbs/hour**	tons/year	tons/year
17.6.	Carbon Monoxide (CO)		**lbs/hour**	**lbs/hour**	tons/year	tons/year

Emissions Information for Fourth Emission Point/Stack

17.7.	Volatile Organic Compounds (VOCs)		**lbs/hour**	**lbs/hour**	tons/year	tons/year
17.8.	Lead		**lbs/hour**	**lbs/hour**	tons/year	tons/year
17.9.			**lbs/hour**	**lbs/hour**	tons/year	tons/year
17.10.			**lbs/hour**	**lbs/hour**	tons/year	tons/year
17.11.			**lbs/hour**	**lbs/hour**	tons/year	tons/year
17.12.			**lbs/hour**	**lbs/hour**	tons/year	tons/year
17.13.			**lbs/hour**	**lbs/hour**	tons/year	tons/year
17.14.			**lbs/hour**	**lbs/hour**	tons/year	tons/year
17.15.			**lbs/hour**	**lbs/hour**	tons/year	tons/year
17.16.			**lbs/hour**	**lbs/hour**	tons/year	tons/year
17.17			**lbs/hour**	**lbs/hour**	tons/year	tons/year
17.18.			**lbs/hour**	**lbs/hour**	tons/year	tons/year

18. Provide Any Additional Information Necessary to Understanding the Emission Rates Provided Above:

Attach the Basis of Determination or Calculations for each Emission Rate provided above.

If there are more than four Emission Points/Stacks, attach additional copies of this form as needed.

Overall Process Emissions

19. Pollutant Emissions

If more than 18 pollutants are emitted from this Process, attach additional copies of this page as needed.

Pollutant Name (Specify VOCs and HAPs Individually in 19.10 through 19.18)	CAS Number (Not required for 19.1 through 19.9)	Maximum Uncontrolled Emission Rate at Design Capacity	Maximum Controlled Emission Rate at Design Capacity	Annual Potential to Emit (PTE)	Expected Annual Emissions

Overall Process Emissions

19.1.	Particulate Matter (PM)		**100 lbs/hour**	**0.30 lbs/hour**	**1.3** tons/year	**1.3** tons/year
19.2.	PM_{10}		**85 lbs/hour**	**0.26 lbs/hour**	**1.1** tons/year	**1.1** tons/year
19.3.	$PM_{2.5}$		**30 lbs/hour**	**0.09 lbs/hour**	**0.4** tons/year	**0.4** tons/year
19.4.	Sulfur Oxides (SO_X)		**lbs/hour**	**lbs/hour**	tons/year	tons/year
19.5.	Nitrogen Oxides (NO_X)		**lbs/hour**	**lbs/hour**	tons/year	tons/year
19.6.	Carbon Monoxide (CO)		**lbs/hour**	**lbs/hour**	tons/year	tons/year
19.7.	Lead		**lbs/hour**	**lbs/hour**	tons/year	tons/year
19.8.	Total Volatile Organic Compounds (VOCs)		**lbs/hour**	**lbs/hour**	tons/year	tons/year
19.9.	Total Hazardous Air Pollutants (HAPs)		**lbs/hour**	**lbs/hour**	tons/year	tons/year
19.10.			**lbs/hour**	**lbs/hour**	tons/year	tons/year
19.11.			**lbs/hour**	**lbs/hour**	tons/year	tons/year
19.12.			**lbs/hour**	**lbs/hour**	tons/year	tons/year
19.13.			**lbs/hour**	**lbs/hour**	tons/year	tons/year
19.14.			**lbs/hour**	**lbs/hour**	tons/year	tons/year
19.15.			**lbs/hour**	**lbs/hour**	tons/year	tons/year
19.16.			**lbs/hour**	**lbs/hour**	tons/year	tons/year
19.17			**lbs/hour**	**lbs/hour**	tons/year	tons/year
19.18.			**lbs/hour**	**lbs/hour**	tons/year	tons/year

20. Provide Any Additional Information Necessary to Understanding the Emission Rates Provided Above:

Attach the Basis of Determination or Calculations for each Emission Rate provided above.

Minor New Source Review Information

21. Does the Process Have the Potential to Emit More Than Five Tons Per Year of Any Pollutant? ☐ YES ☒ NO

22. Is the Source New or Existing? ☒ NEW ☐ EXISTING
See Question 11 of AQM-1

If the Process has the Potential to Emit more than five tons per year of any pollutant, and is a New Source, a Control Technology Analysis pursuant to Regulation No. 1125 Section 4 must be conducted and attached to this application.

Additional Information

23. Is There Any Additional Information Pertinent to this Application? ☐ YES ☒ NO

If YES, complete the rest of Question 23.

23.1. Describe:

Silo Application

If you are using this form electronically, press F1 at any time for help

General Information

1. Facility Name: **Indian River Generating Station**
2. Equipment ID Number: **ID 24 Unit 4 Pebble Lime Day Silo 1**
3. Manufacturer: **TBD**
4. Model: **TBD**
5. Serial Number: **TBD**
6. Silo Type: ☒ Tower Silo
   ☐ Bunker Silo
   ☐ Other (Specify):
7. Number of Compartments in Silo: **1**
8. Material Stored in Silo:

If there are more than three Materials Stored in the Silo, attach additional copies of this page as needed

	Material	Material Density	Compartment Stored In
8.1.	**Pebble Lime**	**720-1130 kilogram/cubic meter**	**Main**
8.2.		**tons/cubic foot**	
8.3.		**tons/cubic foot**	

Attach a Material Safety Data Sheet (MSDS) for each Material Stored in the Silo.

9. Silo Storage Capacity: **7,900 cubic feet**
10. Silo Loading Method: ☒ Pneumatic ☐ Vacuum
    ☐ Hydraulic ☐ Other (Specify):
    ☐ Mechanical
11. Maximum Rate of Silo Loading: **35 tons/hour**
12. Is the Silo Equipped With a Pressure-Vacuum Relief Valve? ☒ YES ☐ NO

If YES, complete the rest of Question 12. If NO, proceed to Question 13.

12.1. Describe the Pressure Relief Valve Settings: **TBD**

13. Is the Silo Equipped With a System That Prevents Overfilling? ☒ YES ☐ NO

If YES, complete the rest of Question 13. If NO, proceed to Question 14.

13.1. Describe the Overfilling Prevention System: **TBD**

General Information

14. Is the Silo Equipped With a Silo Level Monitoring System? ☒ YES ☐ NO

If YES, complete the rest of Question 14. If NO, proceed to Question 15.

14.1. Type of Level Indicator: ☐ Point
☒ Continuous
☐ Other (Specify):

15. Is the Silo Equipped With a Power/Control Panel with a High Level Indicator? ☒ YES ☐ NO

Control Device Information

16. Is an Air Pollution Control Device Used? ☒ YES ☐ NO

If an Air Pollution Control Device is used, complete the rest of Question 16. If not, proceed to Question 17.

16.1. Is Knockout Used? ☐ YES ☒ NO

If YES, complete Form AQM-4.11 and attach it to this application.

16.2. Is a Settling Chamber Used? ☐ YES ☒ NO

If YES, complete Form AQM-4.10 and attach it to this application.

16.3. Is an Inertial or Cyclone Collector Used? ☐ YES ☒ NO

If YES, complete Form AQM-4.5 and attach it to this application.

16.4. Is a Fabric Collector or Baghouse Used? ☒ YES ☐ NO

If YES, complete Form AQM-4.6 and attach it to this application.

16.5. Is a Venturi Scrubber Used? ☐ YES ☒ NO

If YES, complete Form AQM-4.8 and attach it to this application.

16.6. Is an Electrostatic Precipitator Used? ☐ YES ☒ NO

If YES, complete Form AQM-4.7 and attach it to this application.

16.7. Is Any Other Control Device Used? ☐ YES ☒ NO

If YES, attach a copy of the Control Device Manufacturer's Specification Sheets.

If Any Other Control Device is used, complete the rest of Question 16. If not, proceed to Question 17.

16.8. Describe Control Device:

16.9. Pollutants Controlled: ☐ HAPs ☐ PM ☐ PM_{10} ☐ $PM_{2.5}$ ☐ Metals ☐ Other (Specify):

16.10. Control Device Manufacturer:

16.11. Control Device Model:

16.12. Control Device Serial Number:

16.13. Control Device Design Capacity:

16.14. Control Device Removal or Destruction Efficiency:

Stack Information

17. How Does the Process Equipment Vent:
(check all that apply)
☐ Directly to the Atmosphere
☒ Through a Control Device Covered by Forms AQM-4.1 through 4.12
☐ Through Another Control Device Described on This Form

If any of the process equipment vents directly to the atmosphere or through another control device described on this form, proceed to Question 18. If the process equipment vents through a control device, provide the stack parameters on the control device form (AQM-4 Series) and proceed to Question 19.

18. Emission Point Name:

18.1. Stack Height Above Grade: **feet**

18.2. Stack Exit Diameter: **feet**
(Provide Stack Dimensions If Rectangular Stack)

18.3. Is a Stack Cap Present? ☐ YES ☐ NO

18.4. Stack Configuration: ☐ Vertical ☐ Horizontal ☐ Downward-Venting
(check all that apply) ☐ Other (Specify):

18.5. Stack Exit Gas Temperature: **°F**

18.6. Stack Exit Gas Flow Rate: **ACFM**

18.7. Distance to Nearest Property Line: **feet**

18.8. Describe Nearest Obstruction:

18.9. Height of Nearest Obstruction: **feet**

18.10. Distance to Nearest Obstruction: **feet**

18.11. Are Stack Sampling Ports Provided? ☐ YES ☐ NO

Monitoring Information

19. Will Emissions Data be Recorded by a Continuous Emission Monitoring System? ☐ YES ☒ NO

If Yes, attach a copy of the Continuous Emission Monitoring System Manufacturer's Specification Sheets

If YES, complete the rest of Question 19. If NO, proceed to Question 20.

19.1. Pollutants Monitored: ☐ VOCs ☐ HAPs ☐ PM ☐ PM_{10} ☐ $PM_{2.5}$ ☐ NO_X ☐ SO_X ☐ Metals
☐ Other (Specify):

19.2. Describe the Continuous Emission Monitoring System:

19.3. Manufacturer:

19.4. Model:

19.5. Serial Number:

19.6. Will Multiple Emission Units Be Monitored at the Same Point? ☐ YES ☐ NO

If YES, complete the rest of Question 19. If NO, proceed to Question 20.

19.7. Emission Units Monitored:

Monitoring Information

19.8. Will More Than One Emission Unit be Emitting From the Combined Point At Any Time?	☐ YES ☐ NO
If YES, complete the rest of Question 19. If NO, proceed to Question 20.	
19.9. Emission Units Emitting Simultaneously:	

Visible Emissions Monitoring Information

20. Proposed Technique Used to Monitor Visible Emissions:	☐ Opacity Monitor (COM) ☐ Manual (Method 9) ☒ Manual (Method 22) ☐ Other (Describe):
If an Opacity Monitor (COM) is used, complete the rest of Question 20. If not, proceed to Question 21.	
20.1. Describe the Continuous Opacity Monitoring System:	
20.2. Manufacturer:	
20.3. Model:	
20.4. Serial Number:	
21. Proposed Frequency of Opacity Monitoring:	

Monitoring and Alarm Information

22. Are There Any Alarms You Would Like the Department to Consider When Drafting the Permit?	☐ YES ☒ NO
If YES, complete the rest of Question 22. If NO, proceed to Question 23.	
22.1. Describe the System Alarm(s):	

If there are more than five alarms, attach additional copies of this page as needed.

	Operating Parameter Monitored	Describe Alarm Trigger	Monitoring Device or Alarm Type	Does the Alarm Initiate an Automated Response?
22.1.1.			☐ Visual ☐ Auditory ☐ Automatic (Remote Monitoring) ☐ Other	☐ NO ☐ YES Describe:
22.1.2.			☐ Visual ☐ Auditory ☐ Automatic (Remote Monitoring) ☐ Other	☐ NO ☐ YES Describe:
22.1.3.			☐ Visual ☐ Auditory ☐ Automatic (Remote Monitoring) ☐ Other	☐ NO ☐ YES Describe:

Monitoring and Alarm Information

22.1.4.			☐ Visual ☐ Auditory ☐ Automatic (Remote Monitoring) ☐ Other	☐ NO ☐ YES Describe:
22.1.5.			☐ Visual ☐ Auditory ☐ Automatic (Remote Monitoring) ☐ Other	☐ NO ☐ YES Describe:

Emissions Information

23. Do You Plan to Take Any Emission Limitations to Avoid Major Source Status, Minor New Source Review, MACT, NSPS, etc.? ☐ YES ☒ NO

If YES, complete the rest of Question 23. If NO, proceed to Question 24.

23.1. Describe Any Proposed Emission Limitations:

Operating Information

24. Do You Plan to Take Any Operating Limitations to Avoid Major Source Status, Minor New Source Review, MACT, NSPS, etc.? ☐ YES ☒ NO

If YES, complete the rest of Question 24. If NO, proceed to Question 25.

24.1. Describe Any Proposed Operating Limitations:

Additional Information

25. Is There Any Additional Information Pertinent to this Application? ☐ YES ☒ NO

If YES, complete the rest of Question 25.

25.1. Describe:

Baghouse Application

If you are using this form electronically, press F1 at any time for help

General Information

1.	Facility Name: **Indian River Generating Station**
2.	Equipment ID Number: **ID 24 Unit 4 Pebble Day Silo 1 Bin Vent Filter**
3.	Manufacturer: **TBD**
4.	Model: **TBD**
5.	Serial Number: **NA**
6.	Is the Baghouse Insulated? ☒ YES ☐ NO
7.	Design Minimum Operating Temperature: **40 °F**
8.	Design Maximum Operating Temperature: **130 °F**
9.	Are Temperature Controls Provided? ☐ YES ☒ NO
If Yes, complete the rest of Question 9. If no, proceed to Question 10.	
9.1.	Describe the Temperature Controls:
10.	Air Flow Through Baghouse: ☐ Forced ☒ Induced ☐ Other (Specify):
11.	Direction of Flow Through Filters: ☐ Inside Out ☒ Outside In
12.	Particulate Removal Efficiency: **99.7 (avg.)** %
Attach the Manufacturer's Specification Sheet for the Baghouse and Particle Size Removal Efficiency Curve and basis of determination.	

Compartment Information

13.	Number of Compartments: **Single**
14.	Number of Filters (Bags) Per Compartment:
15.	Can the Compartments be Isolated for Replacement or Repair? ☐ YES ☐ NO

Gas Stream Information

16.	Maximum Inlet Volumetric Gas Flow Rate: **3,915 acfm at 130 °F**
17.	Maximum Outlet Volumetric Gas Flow Rate: **3,915 acfm at 130 °F**
18.	Dew Point at Maximum Moisture Content of Gas: **70 °F**

Gas Stream Information

19. pH of Gas Handled: **NA (air)**

20. Dust Characteristics: (Check All That Apply)
- ☐ Sticky
- ☐ Wet
- ☐ Corrosive
- ☒ Dry
- ☐ Other (Specify):

Contaminant Information

21. Percent of Each Contaminant in the Waste Gas and Removal Efficiency

If more than five Contaminants are present, attach additional copies of this page as needed.

	Contaminant Name	Contaminant CAS Number	Percent of Waste Gas	Removal Efficiency
21.1.	**PM/PM10**		%	**99.7 (avg.)** %
21.2.			%	%
21.3.			%	%
21.4.			%	%
21.5.			%	%

Fabric Filter (Bag) Information

22. Fabric Type:
- ☒ Felted
- ☐ Woven
- ☐ Felted-Woven
- ☐ Membrane
- ☐ PTFE Membrane
- ☐ Sintered Metal
- ☐ Ceramic Cartridge
- ☐ Other (Specify):

23. Fabric Material: **TBD**

24. Maximum Continuous Filter Operating Temperature: **130 °F**

25. Clean Fabric Permeability: **TBD** scfm/ft^2 at ΔP inches of water

26. Fabric Filter (Bag) Diameter or Width: **TBD inches**

27. Fabric Filter (Bag) Length: **TBD inches**

28. Effective Area Per Filter: **980 (estimated-will depend on final design) square feet**

29. Minimum Effective Air to Cloth Ratio: 4:1 (estimated-will depend on final design) **inches**

30. Maximum Effective Air to Cloth Ratio: 4:1 (estimated-will depend on final design) **inches**

31. Design Pressure Drop Across Baghouse: 6-12 **inches water**

32. Describe Determining Factor Fabric Filter Changing/Replacement: **Bag filter based on visual inspection and/or differential pressure.**

Attach the Manufacturer's Specification Sheet for the Fabric Filters (Bags).

Filter Cleaning Information

33. Filter Cleaning Method: ☐ Manual Cleaning ☐ Bag Collapse ☐ Reverse Air Jet ☐ Mechanical Shakers ☐ Sonic Cleaning ☒ Pulse Jet ☐ Pneumatic Shakers ☐ Reverse Air Flow ☐ Other (Specify):

If Reverse Air Jet or Pulse Jet is used, complete the rest of Question 33. If not, proceed to Question 34.

33.1. Air Pressure: 60-120 (estimated) **psi**

33.2. Describe How Air Is Supplied to System: **From facility compressed air line**

34. Describe How Filter Cleaning Is Initiated: ☐ Manual ☒ Pressure Drop ☐ Timer ☐ Other (Specify):

Hopper Information

35. Is the Hopper Heated? ☐ YES ☐ NO

36. Is there a Hopper Vibrator? ☐ YES ☐ NO

37. Describe How Collected Material is Treated or Disposed of:

Stack Information

38. Emission Point Name: **ID 24**

38.1. Stack Height Above Grade: **115 feet**

38.2. Stack Exit Diameter: **TBD feet**
(Provide Stack Dimensions If Rectangular Stack)

38.3. Is a Stack Cap Present? ☐ YES ☒ NO

38.4. Stack Configuration: ☒ Vertical ☐ Horizontal ☐ Downward-Venting
(check all that apply) ☐ Other (Specify):

38.5. Stack Exit Gas Temperature: **130 °F**

38.6. Stack Exit Gas Flow Rate: **3,915 ACFM**

38.7. Distance to Nearest Property Line: **430 feet**

38.8. Describe Nearest Obstruction: **Unit 4 Fabric Filter**

38.9. Height of Nearest Obstruction: **87 feet**

38.10. Distance to Nearest Obstruction: **5 feet**

Stack Information

38.11. Are Stack Sampling Ports Provided? ☐ YES ☒ NO

Monitoring and Alarm Information

39. Are There Any Alarms You Would Like the Department to Consider When Drafting the Permit? ☐ YES ☒ NO

If YES, complete the rest of Question 39. If NO, proceed to Question 40.

39.1. Describe the System Alarm(s):

If there are more than five alarms, attach additional copies of this page as needed.

	Operating Parameter Monitored	Describe Alarm Trigger	Monitoring Device or Alarm Type	Does the Alarm Initiate an Automated Response?
39.1.1.			☐ Visual ☐ Auditory ☐ Automatic (Remote Monitoring) ☐ Other	☐ NO ☐ YES Describe:
39.1.2.			☐ Visual ☐ Auditory ☐ Automatic (Remote Monitoring) ☐ Other	☐ NO ☐ YES Describe:
39.1.3.			☐ Visual ☐ Auditory ☐ Automatic (Remote Monitoring) ☐ Other	☐ NO ☐ YES Describe:
39.1.4.			☐ Visual ☐ Auditory ☐ Automatic (Remote Monitoring) ☐ Other	☐ NO ☐ YES Describe:
39.1.5.			☐ Visual ☐ Auditory ☐ Automatic (Remote Monitoring) ☐ Other	☐ NO ☐ YES Describe:

Additional Information

40. Is There Any Additional Information Pertinent to this Application? ☐ YES ☒ NO

If YES, complete the rest of Question 40.

40.1. Describe:

Emissions Information Application

If you are using this form electronically, press F1 at any time for help

Process Information

1. Number of Individual Pieces of Process Equipment in Process: **1**
2. Number of Individual Control Devices in Process: **1**

Emissions Information for First Emission Point/Stack

3. Emission Point Name: **ID 24**
4. Equipment ID Number for all Process Equipment and Control Devices Venting Through Emission Point/Stack: **ID 24**
5. Pollutant Emissions

If more than 18 pollutants are emitted at this Emission Point/Stack, attach additional copies of this page as needed.

	Pollutant Name (Specify VOCs and HAPs Individually in 5.10 through 5.18)	CAS Number (Not required for 5.1 through 5.9)	Maximum Uncontrolled Emission Rate at Design Capacity	Maximum Controlled Emission Rate at Design Capacity	Annual Potential to Emit (PTE)	Expected Annual Emissions
5.1.	Particulate Matter (PM)		**100 lbs/hour**	**0.30 lbs/hour**	**1.3** tons/year	**1.3** tons/year
5.2.	PM_{10}		**85 lbs/hour**	**0.26 lbs/hour**	**1.1** tons/year	**1.1** tons/year
5.3.	$PM_{2.5}$		**30 lbs/hour**	**0.09 lbs/hour**	**0.4** tons/year	**0.4** tons/year
5.4.	Sulfur Oxides (SO_X)		**lbs/hour**	**lbs/hour**	tons/year	tons/year
5.5.	Nitrogen Oxides (NO_X)		**lbs/hour**	**lbs/hour**	tons/year	tons/year
5.6.	Carbon Monoxide (CO)		**lbs/hour**	**lbs/hour**	tons/year	tons/year
5.7.	Lead		**lbs/hour**	**lbs/hour**	tons/year	tons/year
5.8.	Total Volatile Organic Compounds (VOCs)		**lbs/hour**	**lbs/hour**	tons/year	tons/year

Emissions Information for First Emission Point/Stack

5.9.	Total Hazardous Air Pollutants (HAPs)		**lbs/hour**	**lbs/hour**	tons/year	tons/year
5.10.			**lbs/hour**	**lbs/hour**	tons/year	tons/year
5.11.			**lbs/hour**	**lbs/hour**	tons/year	tons/year
5.12.			**lbs/hour**	**lbs/hour**	tons/year	tons/year
5.13.			**lbs/hour**	**lbs/hour**	tons/year	tons/year
5.14.			**lbs/hour**	**lbs/hour**	tons/year	tons/year
5.15.			**lbs/hour**	**lbs/hour**	tons/year	tons/year
5.16.			**lbs/hour**	**lbs/hour**	tons/year	tons/year
5.17			**lbs/hour**	**lbs/hour**	tons/year	tons/year
5.18.			**lbs/hour**	**lbs/hour**	tons/year	tons/year

6. Provide Any Additional Information Necessary to Understanding the Emission Rates Provided Above:

Attach the Basis of Determination or Calculations for each Emission Rate provided above.

Emissions Information for Second Emission Point/Stack

7. Emission Point Name:

8. Equipment ID Number for all Process Equipment and Control Devices Venting Through Emission Point/Stack:

9. Pollutant Emissions

If more than 18 pollutants are emitted at this Emission Point/Stack, attach additional copies of this page as needed.

Pollutant Name (Specify VOCs and HAPs Individually in 9.10 through 9.18)	CAS Number (Not required for 9.1 through 9.9)	Maximum Uncontrolled Emission Rate at Design Capacity	Maximum Controlled Emission Rate at Design Capacity	Annual Potential to Emit (PTE)	Expected Annual Emissions

Emissions Information for Second Emission Point/Stack

9.1.	Particulate Matter (PM)		**lbs/hour**	**lbs/hour**	tons/year	tons/year
9.2.	PM_{10}		**lbs/hour**	**lbs/hour**	tons/year	tons/year
9.3.	$PM_{2.5}$		**lbs/hour**	**lbs/hour**	tons/year	tons/year
9.4.	Sulfur Oxides (SO_X)		**lbs/hour**	**lbs/hour**	tons/year	tons/year
9.5.	Nitrogen Oxides (NO_X)		**lbs/hour**	**lbs/hour**	tons/year	tons/year
9.6.	Carbon Monoxide (CO)		**lbs/hour**	**lbs/hour**	tons/year	tons/year
9.7.	Lead		**lbs/hour**	**lbs/hour**	tons/year	tons/year
9.8.	Total Volatile Organic Compounds (VOCs)		**lbs/hour**	**lbs/hour**	tons/year	tons/year
9.9.	Total Hazardous Air Pollutants (HAPs)		**lbs/hour**	**lbs/hour**	tons/year	tons/year
9.10.			**lbs/hour**	**lbs/hour**	tons/year	tons/year
9.11.			**lbs/hour**	**lbs/hour**	tons/year	tons/year
9.12.			**lbs/hour**	**lbs/hour**	tons/year	tons/year
9.13.			**lbs/hour**	**lbs/hour**	tons/year	tons/year
9.14.			**lbs/hour**	**lbs/hour**	tons/year	tons/year
9.15.			**lbs/hour**	**lbs/hour**	tons/year	tons/year
9.16.			**lbs/hour**	**lbs/hour**	tons/year	tons/year
9.17			**lbs/hour**	**lbs/hour**	tons/year	tons/year
9.18.			**lbs/hour**	**lbs/hour**	tons/year	tons/year

10. Provide Any Additional Information Necessary to Understanding the Emission Rates Provided Above:

Attach the Basis of Determination or Calculations for each Emission Rate provided above.

Emissions Information for Third Emission Point/Stack

11. Emission Point Name:

12. Equipment ID Number for all Process Equipment and Control Devices Venting Through Emission Point/Stack:

13. Pollutant Emissions

If more than 18 pollutants are emitted at this Emission Point/Stack, attach additional copies of this page as needed.

	Pollutant Name (Specify VOCs and HAPs Individually in 13.10 through 13.18)	CAS Number (Not required for 13.1 through 13.9)	Maximum Uncontrolled Emission Rate at Design Capacity	Maximum Controlled Emission Rate at Design Capacity	Annual Potential to Emit (PTE)	Expected Annual Emissions
13.1.	Particulate Matter (PM)		**lbs/hour**	**lbs/hour**	tons/year	tons/year
13.2.	PM_{10}		**lbs/hour**	**lbs/hour**	tons/year	tons/year
13.3.	$PM_{2.5}$		**lbs/hour**	**lbs/hour**	tons/year	tons/year
13.4.	Sulfur Oxides (SO_X)		**lbs/hour**	**lbs/hour**	tons/year	tons/year
13.5.	Nitrogen Oxides (NO_X)		**lbs/hour**	**lbs/hour**	tons/year	tons/year
13.6.	Carbon Monoxide (CO)		**lbs/hour**	**lbs/hour**	tons/year	tons/year
13.7.	Lead		**lbs/hour**	**lbs/hour**	tons/year	tons/year
13.8.	Total Volatile Organic Compounds (VOCs)		**lbs/hour**	**lbs/hour**	tons/year	tons/year
13.9.	Total Hazardous Air Pollutants (HAPs)		**lbs/hour**	**lbs/hour**	tons/year	tons/year
13.10.			**lbs/hour**	**lbs/hour**	tons/year	tons/year
13.11.			**lbs/hour**	**lbs/hour**	tons/year	tons/year
13.12.			**lbs/hour**	**lbs/hour**	tons/year	tons/year
13.13.			**lbs/hour**	**lbs/hour**	tons/year	tons/year
13.14.			**lbs/hour**	**lbs/hour**	tons/year	tons/year

Emissions Information for Third Emission Point/Stack

13.15.		**lbs/hour**	**lbs/hour**	tons/year	tons/year
13.16.		**lbs/hour**	**lbs/hour**	tons/year	tons/year
13.17		**lbs/hour**	**lbs/hour**	tons/year	tons/year
13.18.		**lbs/hour**	**lbs/hour**	tons/year	tons/year

14. Provide Any Additional Information Necessary to Understanding the Emission Rates Provided Above:

Attach the Basis of Determination or Calculations for each Emission Rate provided above.

Emissions Information for Fourth Emission Point/Stack

15. Emission Point Name:

16. Equipment ID Number for all Process Equipment and Control Devices Venting Through Emission Point/Stack:

17. Pollutant Emissions

If more than 18 pollutants are emitted at this Emission Point/Stack, attach additional copies of this page as needed.

	Pollutant Name (Specify VOCs and HAPs Individually in 17.10 through 17.18)	CAS Number (Not required for 17.1 through 17.9)	Maximum Uncontrolled Emission Rate at Design Capacity	Maximum Controlled Emission Rate at Design Capacity	Annual Potential to Emit (PTE)	Expected Annual Emissions
17.1.	Particulate Matter (PM)		**lbs/hour**	**lbs/hour**	tons/year	tons/year
17.2.	PM_{10}		**lbs/hour**	**lbs/hour**	tons/year	tons/year
17.3.	$PM_{2.5}$		**lbs/hour**	**lbs/hour**	tons/year	tons/year
17.4.	Sulfur Oxides (SO_X)		**lbs/hour**	**lbs/hour**	tons/year	tons/year
17.5.	Nitrogen Oxides (NO_X)		**lbs/hour**	**lbs/hour**	tons/year	tons/year
17.6.	Carbon Monoxide (CO)		**lbs/hour**	**lbs/hour**	tons/year	tons/year

Emissions Information for Fourth Emission Point/Stack

17.7.	Volatile Organic Compounds (VOCs)		lbs/hour	lbs/hour	tons/year	tons/year
17.8.	Lead		lbs/hour	lbs/hour	tons/year	tons/year
17.9.			lbs/hour	lbs/hour	tons/year	tons/year
17.10.			lbs/hour	lbs/hour	tons/year	tons/year
17.11.			lbs/hour	lbs/hour	tons/year	tons/year
17.12.			lbs/hour	lbs/hour	tons/year	tons/year
17.13.			lbs/hour	lbs/hour	tons/year	tons/year
17.14.			lbs/hour	lbs/hour	tons/year	tons/year
17.15.			lbs/hour	lbs/hour	tons/year	tons/year
17.16.			lbs/hour	lbs/hour	tons/year	tons/year
17.17			lbs/hour	lbs/hour	tons/year	tons/year
17.18.			lbs/hour	lbs/hour	tons/year	tons/year

18. Provide Any Additional Information Necessary to Understanding the Emission Rates Provided Above:

Attach the Basis of Determination or Calculations for each Emission Rate provided above.

If there are more than four Emission Points/Stacks, attach additional copies of this form as needed.

Overall Process Emissions

19. Pollutant Emissions

If more than 18 pollutants are emitted from this Process, attach additional copies of this page as needed.

Pollutant Name (Specify VOCs and HAPs Individually in 19.10 through 19.18)	CAS Number (Not required for 19.1 through 19.9)	Maximum Uncontrolled Emission Rate at Design Capacity	Maximum Controlled Emission Rate at Design Capacity	Annual Potential to Emit (PTE)	Expected Annual Emissions

Overall Process Emissions

19.1.	Particulate Matter (PM)		**100 lbs/hour**	**0.30 lbs/hour**	**1.3** tons/year	**1.3** tons/year
19.2.	PM_{10}		**85 lbs/hour**	**0.26 lbs/hour**	**1.1** tons/year	**1.1** tons/year
19.3.	$PM_{2.5}$		**30 lbs/hour**	**0.09 lbs/hour**	**0.4** tons/year	**0.4** tons/year
19.4.	Sulfur Oxides (SO_X)		**lbs/hour**	**lbs/hour**	tons/year	tons/year
19.5.	Nitrogen Oxides (NO_X)		**lbs/hour**	**lbs/hour**	tons/year	tons/year
19.6.	Carbon Monoxide (CO)		**lbs/hour**	**lbs/hour**	tons/year	tons/year
19.7.	Lead		**lbs/hour**	**lbs/hour**	tons/year	tons/year
19.8.	Total Volatile Organic Compounds (VOCs)		**lbs/hour**	**lbs/hour**	tons/year	tons/year
19.9.	Total Hazardous Air Pollutants (HAPs)		**lbs/hour**	**lbs/hour**	tons/year	tons/year
19.10.			**lbs/hour**	**lbs/hour**	tons/year	tons/year
19.11.			**lbs/hour**	**lbs/hour**	tons/year	tons/year
19.12.			**lbs/hour**	**lbs/hour**	tons/year	tons/year
19.13.			**lbs/hour**	**lbs/hour**	tons/year	tons/year
19.14.			**lbs/hour**	**lbs/hour**	tons/year	tons/year
19.15.			**lbs/hour**	**lbs/hour**	tons/year	tons/year
19.16.			**lbs/hour**	**lbs/hour**	tons/year	tons/year
19.17			**lbs/hour**	**lbs/hour**	tons/year	tons/year
19.18.			**lbs/hour**	**lbs/hour**	tons/year	tons/year

20. Provide Any Additional Information Necessary to Understanding the Emission Rates Provided Above:

Attach the Basis of Determination or Calculations for each Emission Rate provided above.

Minor New Source Review Information

21. Does the Process Have the Potential to Emit More Than Five Tons Per Year of Any Pollutant? ☐ YES ☒ NO

22. Is the Source New or Existing? ☒ NEW ☐ EXISTING
See Question 11 of AQM-1

If the Process has the Potential to Emit more than five tons per year of any pollutant, and is a New Source, a Control Technology Analysis pursuant to Regulation No. 1125 Section 4 must be conducted and attached to this application.

Additional Information

23. Is There Any Additional Information Pertinent to this Application? ☐ YES ☒ NO

If YES, complete the rest of Question 23.

23.1. Describe:

Silo Application

If you are using this form electronically, press F1 at any time for help

General Information

1. Facility Name: **Indian River Generating Station**
2. Equipment ID Number: **ID 25 Unit 4 Pebble Lime Day Silo 2**
3. Manufacturer: **TBD**
4. Model: **TBD**
5. Serial Number: **TBD**
6. Silo Type: ☒ Tower Silo
   ☐ Bunker Silo
   ☐ Other (Specify):
7. Number of Compartments in Silo: **1**
8. Material Stored in Silo:

If there are more than three Materials Stored in the Silo, attach additional copies of this page as needed

	Material	Material Density	Compartment Stored In
8.1.	**Pebble Lime**	**720-1130 kilogram/cubic meter**	**Main**
8.2.		**tons/cubic foot**	
8.3.		**tons/cubic foot**	

Attach a Material Safety Data Sheet (MSDS) for each Material Stored in the Silo.

9. Silo Storage Capacity: **7,900 cubic feet**
10. Silo Loading Method: ☒ Pneumatic ☐ Vacuum
    ☐ Hydraulic ☐ Other (Specify):
    ☐ Mechanical
11. Maximum Rate of Silo Loading: **35 tons/hour**
12. Is the Silo Equipped With a Pressure-Vacuum Relief Valve? ☒ YES ☐ NO

If YES, complete the rest of Question 12. If NO, proceed to Question 13.

12.1. Describe the Pressure Relief Valve Settings: **TBD**

13. Is the Silo Equipped With a System That Prevents Overfilling? ☒ YES ☐ NO

If YES, complete the rest of Question 13. If NO, proceed to Question 14.

13.1. Describe the Overfilling Prevention System: **TBD**

General Information

14. Is the Silo Equipped With a Silo Level Monitoring System? ☒ YES ☐ NO

If YES, complete the rest of Question 14. If NO, proceed to Question 15.

14.1. Type of Level Indicator: ☐ Point
☒ Continuous
☐ Other (Specify):

15. Is the Silo Equipped With a Power/Control Panel with a High Level Indicator? ☒ YES ☐ NO

Control Device Information

16. Is an Air Pollution Control Device Used? ☒ YES ☐ NO

If an Air Pollution Control Device is used, complete the rest of Question 16. If not, proceed to Question 17.

16.1. Is Knockout Used? ☐ YES ☒ NO

If YES, complete Form AQM-4.11 and attach it to this application.

16.2. Is a Settling Chamber Used? ☐ YES ☒ NO

If YES, complete Form AQM-4.10 and attach it to this application.

16.3. Is an Inertial or Cyclone Collector Used? ☐ YES ☒ NO

If YES, complete Form AQM-4.5 and attach it to this application.

16.4. Is a Fabric Collector or Baghouse Used? ☒ YES ☐ NO

If YES, complete Form AQM-4.6 and attach it to this application.

16.5. Is a Venturi Scrubber Used? ☐ YES ☒ NO

If YES, complete Form AQM-4.8 and attach it to this application.

16.6. Is an Electrostatic Precipitator Used? ☐ YES ☒ NO

If YES, complete Form AQM-4.7 and attach it to this application.

16.7. Is Any Other Control Device Used? ☐ YES ☒ NO

If YES, attach a copy of the Control Device Manufacturer's Specification Sheets.

If Any Other Control Device is used, complete the rest of Question 16. If not, proceed to Question 17.

16.8. Describe Control Device:

16.9. Pollutants Controlled: ☐ HAPs ☐ PM ☐ PM_{10} ☐ $PM_{2.5}$ ☐ Metals ☐ Other (Specify):

16.10. Control Device Manufacturer:

16.11. Control Device Model:

16.12. Control Device Serial Number:

16.13. Control Device Design Capacity:

16.14. Control Device Removal or Destruction Efficiency:

Stack Information

17. How Does the Process Equipment Vent:
(check all that apply)
☐ Directly to the Atmosphere
☒ Through a Control Device Covered by Forms AQM-4.1 through 4.12
☐ Through Another Control Device Described on This Form

If any of the process equipment vents directly to the atmosphere or through another control device described on this form, proceed to Question 18. If the process equipment vents through a control device, provide the stack parameters on the control device form (AQM-4 Series) and proceed to Question 19.

18. Emission Point Name:

18.1. Stack Height Above Grade: **feet**

18.2. Stack Exit Diameter: **feet**
(Provide Stack Dimensions If Rectangular Stack)

18.3. Is a Stack Cap Present? ☐ YES ☐ NO

18.4. Stack Configuration: ☐ Vertical ☐ Horizontal ☐ Downward-Venting
(check all that apply) ☐ Other (Specify):

18.5. Stack Exit Gas Temperature: **°F**

18.6. Stack Exit Gas Flow Rate: **ACFM**

18.7. Distance to Nearest Property Line: **feet**

18.8. Describe Nearest Obstruction:

18.9. Height of Nearest Obstruction: **feet**

18.10. Distance to Nearest Obstruction: **feet**

18.11. Are Stack Sampling Ports Provided? ☐ YES ☐ NO

Monitoring Information

19. Will Emissions Data be Recorded by a Continuous Emission Monitoring System? ☐ YES ☒ NO

If Yes, attach a copy of the Continuous Emission Monitoring System Manufacturer's Specification Sheets

If YES, complete the rest of Question 19. If NO, proceed to Question 20.

19.1. Pollutants Monitored: ☐ VOCs ☐ HAPs ☐ PM ☐ PM_{10} ☐ $PM_{2.5}$ ☐ NO_X ☐ SO_X ☐ Metals
☐ Other (Specify):

19.2. Describe the Continuous Emission Monitoring System:

19.3. Manufacturer:

19.4. Model:

19.5. Serial Number:

19.6. Will Multiple Emission Units Be Monitored at the Same Point? ☐ YES ☐ NO

If YES, complete the rest of Question 19. If NO, proceed to Question 20.

19.7. Emission Units Monitored:

Monitoring Information

19.8. Will More Than One Emission Unit be Emitting From the Combined Point At Any Time?	☐ YES ☐ NO
If YES, complete the rest of Question 19. If NO, proceed to Question 20.	
19.9. Emission Units Emitting Simultaneously:	

Visible Emissions Monitoring Information

20. Proposed Technique Used to Monitor Visible Emissions:	☐ Opacity Monitor (COM) ☐ Manual (Method 9) ☒ Manual (Method 22) ☐ Other (Describe):
If an Opacity Monitor (COM) is used, complete the rest of Question 20. If not, proceed to Question 21.	
20.1. Describe the Continuous Opacity Monitoring System:	
20.2. Manufacturer:	
20.3. Model:	
20.4. Serial Number:	
21. Proposed Frequency of Opacity Monitoring:	

Monitoring and Alarm Information

22. Are There Any Alarms You Would Like the Department to Consider When Drafting the Permit?	☐ YES ☒ NO
If YES, complete the rest of Question 22. If NO, proceed to Question 23.	
22.1. Describe the System Alarm(s):	

If there are more than five alarms, attach additional copies of this page as needed.

	Operating Parameter Monitored	Describe Alarm Trigger	Monitoring Device or Alarm Type	Does the Alarm Initiate an Automated Response?
22.1.1.			☐ Visual ☐ Auditory ☐ Automatic (Remote Monitoring) ☐ Other	☐ NO ☐ YES Describe:
22.1.2.			☐ Visual ☐ Auditory ☐ Automatic (Remote Monitoring) ☐ Other	☐ NO ☐ YES Describe:
22.1.3.			☐ Visual ☐ Auditory ☐ Automatic (Remote Monitoring) ☐ Other	☐ NO ☐ YES Describe:

Monitoring and Alarm Information

22.1.4.			☐ Visual ☐ Auditory ☐ Automatic (Remote Monitoring) ☐ Other	☐ NO ☐ YES Describe:
22.1.5.			☐ Visual ☐ Auditory ☐ Automatic (Remote Monitoring) ☐ Other	☐ NO ☐ YES Describe:

Emissions Information

23. Do You Plan to Take Any Emission Limitations to Avoid Major Source Status, Minor New Source Review, MACT, NSPS, etc.? ☐ YES ☒ NO

If YES, complete the rest of Question 23. If NO, proceed to Question 24.

23.1. Describe Any Proposed Emission Limitations:

Operating Information

24. Do You Plan to Take Any Operating Limitations to Avoid Major Source Status, Minor New Source Review, MACT, NSPS, etc.? ☐ YES ☒ NO

If YES, complete the rest of Question 24. If NO, proceed to Question 25.

24.1. Describe Any Proposed Operating Limitations:

Additional Information

25. Is There Any Additional Information Pertinent to this Application? ☐ YES ☒ NO

If YES, complete the rest of Question 25.

25.1. Describe:

Baghouse Application

If you are using this form electronically, press F1 at any time for help

General Information

1.	Facility Name: **Indian River Generating Station**
2.	Equipment ID Number: **ID 25 Unit 4 Pebble Day Silo 2 Bin Vent Filter**
3.	Manufacturer: **TBD**
4.	Model: **TBD**
5.	Serial Number: **NA**
6.	Is the Baghouse Insulated? ☒ YES ☐ NO
7.	Design Minimum Operating Temperature: **40 °F**
8.	Design Maximum Operating Temperature: **130 °F**
9.	Are Temperature Controls Provided? ☐ YES ☒ NO
If Yes, complete the rest of Question 9. If no, proceed to Question 10.	
9.1.	Describe the Temperature Controls:
10.	Air Flow Through Baghouse: ☐ Forced ☒ Induced ☐ Other (Specify):
11.	Direction of Flow Through Filters: ☐ Inside Out ☒ Outside In
12.	Particulate Removal Efficiency: **99.7 (avg.)** %
Attach the Manufacturer's Specification Sheet for the Baghouse and Particle Size Removal Efficiency Curve and basis of determination.	

Compartment Information

13.	Number of Compartments: **Single**
14.	Number of Filters (Bags) Per Compartment:
15.	Can the Compartments be Isolated for Replacement or Repair? ☐ YES ☐ NO

Gas Stream Information

16.	Maximum Inlet Volumetric Gas Flow Rate: **3,915 acfm at 130 °F**
17.	Maximum Outlet Volumetric Gas Flow Rate: **3,915 acfm at 130 °F**
18.	Dew Point at Maximum Moisture Content of Gas: **70 °F**

Gas Stream Information

19. pH of Gas Handled: **NA (air)**

20. Dust Characteristics: (Check All That Apply)
- ☐ Sticky
- ☐ Wet
- ☐ Corrosive
- ☒ Dry
- ☐ Other (Specify):

Contaminant Information

21. Percent of Each Contaminant in the Waste Gas and Removal Efficiency

If more than five Contaminants are present, attach additional copies of this page as needed.

	Contaminant Name	Contaminant CAS Number	Percent of Waste Gas	Removal Efficiency
21.1.	**PM/PM10**		%	**99.7 (avg.)** %
21.2.			%	%
21.3.			%	%
21.4.			%	%
21.5.			%	%

Fabric Filter (Bag) Information

22. Fabric Type:
- ☒ Felted
- ☐ Woven
- ☐ Felted-Woven
- ☐ Membrane
- ☐ PTFE Membrane
- ☐ Sintered Metal
- ☐ Ceramic Cartridge
- ☐ Other (Specify):

23. Fabric Material: **TBD**

24. Maximum Continuous Filter Operating Temperature: **130 °F**

25. Clean Fabric Permeability: **TBD** scfm/ft^2 at ΔP inches of water

26. Fabric Filter (Bag) Diameter or Width: **TBD inches**

27. Fabric Filter (Bag) Length: **TBD inches**

28. Effective Area Per Filter: **980 (estimated-will depend on final design) square feet**

29. Minimum Effective Air to Cloth Ratio: 4:1 (estimated-will depend on final design) **inches**

30. Maximum Effective Air to Cloth Ratio: 4:1 (estimated-will depend on final design) **inches**

31. Design Pressure Drop Across Baghouse: 6-12 **inches water**

32. Describe Determining Factor Fabric Filter Changing/Replacement: **Bag filter based on visual inspection and/or differential pressure.**

Attach the Manufacturer's Specification Sheet for the Fabric Filters (Bags).

Filter Cleaning Information

33. Filter Cleaning Method: ☐ Manual Cleaning ☐ Bag Collapse ☐ Reverse Air Jet ☐ Mechanical Shakers ☐ Sonic Cleaning ☒ Pulse Jet ☐ Pneumatic Shakers ☐ Reverse Air Flow ☐ Other (Specify):

If Reverse Air Jet or Pulse Jet is used, complete the rest of Question 33. If not, proceed to Question 34.

33.1. Air Pressure: 60-120 (estimated) **psi**

33.2. Describe How Air Is Supplied to System: **From facility compressed air line**

34. Describe How Filter Cleaning Is Initiated: ☐ Manual ☒ Pressure Drop ☐ Timer ☐ Other (Specify):

Hopper Information

35. Is the Hopper Heated? ☐ YES ☐ NO

36. Is there a Hopper Vibrator? ☐ YES ☐ NO

37. Describe How Collected Material is Treated or Disposed of:

Stack Information

38. Emission Point Name: **ID 25**

38.1. Stack Height Above Grade: **115 feet**

38.2. Stack Exit Diameter: **TBD feet**
(Provide Stack Dimensions If Rectangular Stack)

38.3. Is a Stack Cap Present? ☐ YES ☒ NO

38.4. Stack Configuration: ☒ Vertical ☐ Horizontal ☐ Downward-Venting
(check all that apply) ☐ Other (Specify):

38.5. Stack Exit Gas Temperature: **130 °F**

38.6. Stack Exit Gas Flow Rate: **3,915 ACFM**

38.7. Distance to Nearest Property Line: **430 feet**

38.8. Describe Nearest Obstruction: **Unit 4 Fabric Filter**

38.9. Height of Nearest Obstruction: **87 feet**

38.10. Distance to Nearest Obstruction: **5 feet**

Stack Information

38.11. Are Stack Sampling Ports Provided? ☐ YES ☒ NO

Monitoring and Alarm Information

39. Are There Any Alarms You Would Like the Department to Consider When Drafting the Permit? ☐ YES ☒ NO

If YES, complete the rest of Question 39. If NO, proceed to Question 40.

39.1. Describe the System Alarm(s):

If there are more than five alarms, attach additional copies of this page as needed.

	Operating Parameter Monitored	Describe Alarm Trigger	Monitoring Device or Alarm Type	Does the Alarm Initiate an Automated Response?
39.1.1.			☐ Visual ☐ Auditory ☐ Automatic (Remote Monitoring) ☐ Other	☐ NO ☐ YES Describe:
39.1.2.			☐ Visual ☐ Auditory ☐ Automatic (Remote Monitoring) ☐ Other	☐ NO ☐ YES Describe:
39.1.3.			☐ Visual ☐ Auditory ☐ Automatic (Remote Monitoring) ☐ Other	☐ NO ☐ YES Describe:
39.1.4.			☐ Visual ☐ Auditory ☐ Automatic (Remote Monitoring) ☐ Other	☐ NO ☐ YES Describe:
39.1.5.			☐ Visual ☐ Auditory ☐ Automatic (Remote Monitoring) ☐ Other	☐ NO ☐ YES Describe:

Additional Information

40. Is There Any Additional Information Pertinent to this Application? ☐ YES ☒ NO

If YES, complete the rest of Question 40.

40.1. Describe:

Emissions Information Application

If you are using this form electronically, press F1 at any time for help

Process Information

1.	Number of Individual Pieces of Process Equipment in Process: **1**
2.	Number of Individual Control Devices in Process: **1**

Emissions Information for First Emission Point/Stack

3.	Emission Point Name: **ID 25**
4.	Equipment ID Number for all Process Equipment and Control Devices Venting Through Emission Point/Stack: **ID 25**
5.	Pollutant Emissions

If more than 18 pollutants are emitted at this Emission Point/Stack, attach additional copies of this page as needed.

	Pollutant Name (Specify VOCs and HAPs Individually in 5.10 through 5.18)	CAS Number (Not required for 5.1 through 5.9)	Maximum Uncontrolled Emission Rate at Design Capacity	Maximum Controlled Emission Rate at Design Capacity	Annual Potential to Emit (PTE)	Expected Annual Emissions
5.1.	Particulate Matter (PM)		**100 lbs/hour**	**0.30 lbs/hour**	**1.3** tons/year	**1.3** tons/year
5.2.	PM_{10}		**85 lbs/hour**	**0.26 lbs/hour**	**1.1** tons/year	**1.1** tons/year
5.3.	$PM_{2.5}$		**30 lbs/hour**	**0.09 lbs/hour**	**0.4** tons/year	**0.4** tons/year
5.4.	Sulfur Oxides (SO_X)		**lbs/hour**	**lbs/hour**	tons/year	tons/year
5.5.	Nitrogen Oxides (NO_X)		**lbs/hour**	**lbs/hour**	tons/year	tons/year
5.6.	Carbon Monoxide (CO)		**lbs/hour**	**lbs/hour**	tons/year	tons/year
5.7.	Lead		**lbs/hour**	**lbs/hour**	tons/year	tons/year
5.8.	Total Volatile Organic Compounds (VOCs)		**lbs/hour**	**lbs/hour**	tons/year	tons/year

Emissions Information for First Emission Point/Stack

5.9.	Total Hazardous Air Pollutants (HAPs)		**lbs/hour**	**lbs/hour**	tons/year	tons/year
5.10.			**lbs/hour**	**lbs/hour**	tons/year	tons/year
5.11.			**lbs/hour**	**lbs/hour**	tons/year	tons/year
5.12.			**lbs/hour**	**lbs/hour**	tons/year	tons/year
5.13.			**lbs/hour**	**lbs/hour**	tons/year	tons/year
5.14.			**lbs/hour**	**lbs/hour**	tons/year	tons/year
5.15.			**lbs/hour**	**lbs/hour**	tons/year	tons/year
5.16.			**lbs/hour**	**lbs/hour**	tons/year	tons/year
5.17			**lbs/hour**	**lbs/hour**	tons/year	tons/year
5.18.			**lbs/hour**	**lbs/hour**	tons/year	tons/year

6. Provide Any Additional Information Necessary to Understanding the Emission Rates Provided Above:

Attach the Basis of Determination or Calculations for each Emission Rate provided above.

Emissions Information for Second Emission Point/Stack

7. Emission Point Name:

8. Equipment ID Number for all Process Equipment and Control Devices Venting Through Emission Point/Stack:

9. Pollutant Emissions

If more than 18 pollutants are emitted at this Emission Point/Stack, attach additional copies of this page as needed.

Pollutant Name (Specify VOCs and HAPs Individually in 9.10 through 9.18)	CAS Number (Not required for 9.1 through 9.9)	Maximum Uncontrolled Emission Rate at Design Capacity	Maximum Controlled Emission Rate at Design Capacity	Annual Potential to Emit (PTE)	Expected Annual Emissions

Emissions Information for Second Emission Point/Stack

9.1.	Particulate Matter (PM)		**lbs/hour**	**lbs/hour**	tons/year	tons/year
9.2.	PM_{10}		**lbs/hour**	**lbs/hour**	tons/year	tons/year
9.3.	$PM_{2.5}$		**lbs/hour**	**lbs/hour**	tons/year	tons/year
9.4.	Sulfur Oxides (SO_X)		**lbs/hour**	**lbs/hour**	tons/year	tons/year
9.5.	Nitrogen Oxides (NO_X)		**lbs/hour**	**lbs/hour**	tons/year	tons/year
9.6.	Carbon Monoxide (CO)		**lbs/hour**	**lbs/hour**	tons/year	tons/year
9.7.	Lead		**lbs/hour**	**lbs/hour**	tons/year	tons/year
9.8.	Total Volatile Organic Compounds (VOCs)		**lbs/hour**	**lbs/hour**	tons/year	tons/year
9.9.	Total Hazardous Air Pollutants (HAPs)		**lbs/hour**	**lbs/hour**	tons/year	tons/year
9.10.			**lbs/hour**	**lbs/hour**	tons/year	tons/year
9.11.			**lbs/hour**	**lbs/hour**	tons/year	tons/year
9.12.			**lbs/hour**	**lbs/hour**	tons/year	tons/year
9.13.			**lbs/hour**	**lbs/hour**	tons/year	tons/year
9.14.			**lbs/hour**	**lbs/hour**	tons/year	tons/year
9.15.			**lbs/hour**	**lbs/hour**	tons/year	tons/year
9.16.			**lbs/hour**	**lbs/hour**	tons/year	tons/year
9.17			**lbs/hour**	**lbs/hour**	tons/year	tons/year
9.18.			**lbs/hour**	**lbs/hour**	tons/year	tons/year

10. Provide Any Additional Information Necessary to Understanding the Emission Rates Provided Above:

Attach the Basis of Determination or Calculations for each Emission Rate provided above.

Emissions Information for Third Emission Point/Stack

11. Emission Point Name:

12. Equipment ID Number for all Process Equipment and Control Devices Venting Through Emission Point/Stack:

13. Pollutant Emissions

If more than 18 pollutants are emitted at this Emission Point/Stack, attach additional copies of this page as needed.

	Pollutant Name (Specify VOCs and HAPs Individually in 13.10 through 13.18)	CAS Number (Not required for 13.1 through 13.9)	Maximum Uncontrolled Emission Rate at Design Capacity	Maximum Controlled Emission Rate at Design Capacity	Annual Potential to Emit (PTE)	Expected Annual Emissions
13.1.	Particulate Matter (PM)		**lbs/hour**	**lbs/hour**	tons/year	tons/year
13.2.	PM_{10}		**lbs/hour**	**lbs/hour**	tons/year	tons/year
13.3.	$PM_{2.5}$		**lbs/hour**	**lbs/hour**	tons/year	tons/year
13.4.	Sulfur Oxides (SO_X)		**lbs/hour**	**lbs/hour**	tons/year	tons/year
13.5.	Nitrogen Oxides (NO_X)		**lbs/hour**	**lbs/hour**	tons/year	tons/year
13.6.	Carbon Monoxide (CO)		**lbs/hour**	**lbs/hour**	tons/year	tons/year
13.7.	Lead		**lbs/hour**	**lbs/hour**	tons/year	tons/year
13.8.	Total Volatile Organic Compounds (VOCs)		**lbs/hour**	**lbs/hour**	tons/year	tons/year
13.9.	Total Hazardous Air Pollutants (HAPs)		**lbs/hour**	**lbs/hour**	tons/year	tons/year
13.10.			**lbs/hour**	**lbs/hour**	tons/year	tons/year
13.11.			**lbs/hour**	**lbs/hour**	tons/year	tons/year
13.12.			**lbs/hour**	**lbs/hour**	tons/year	tons/year
13.13.			**lbs/hour**	**lbs/hour**	tons/year	tons/year
13.14.			**lbs/hour**	**lbs/hour**	tons/year	tons/year

Emissions Information for Third Emission Point/Stack

13.15.		**lbs/hour**	**lbs/hour**	tons/year	tons/year
13.16.		**lbs/hour**	**lbs/hour**	tons/year	tons/year
13.17		**lbs/hour**	**lbs/hour**	tons/year	tons/year
13.18.		**lbs/hour**	**lbs/hour**	tons/year	tons/year

14. Provide Any Additional Information Necessary to Understanding the Emission Rates Provided Above:

Attach the Basis of Determination or Calculations for each Emission Rate provided above.

Emissions Information for Fourth Emission Point/Stack

15. Emission Point Name:

16. Equipment ID Number for all Process Equipment and Control Devices Venting Through Emission Point/Stack:

17. Pollutant Emissions

If more than 18 pollutants are emitted at this Emission Point/Stack, attach additional copies of this page as needed.

	Pollutant Name (Specify VOCs and HAPs Individually in 17.10 through 17.18)	CAS Number (Not required for 17.1 through 17.9)	Maximum Uncontrolled Emission Rate at Design Capacity	Maximum Controlled Emission Rate at Design Capacity	Annual Potential to Emit (PTE)	Expected Annual Emissions
17.1.	Particulate Matter (PM)		**lbs/hour**	**lbs/hour**	tons/year	tons/year
17.2.	PM_{10}		**lbs/hour**	**lbs/hour**	tons/year	tons/year
17.3.	$PM_{2.5}$		**lbs/hour**	**lbs/hour**	tons/year	tons/year
17.4.	Sulfur Oxides (SO_X)		**lbs/hour**	**lbs/hour**	tons/year	tons/year
17.5.	Nitrogen Oxides (NO_X)		**lbs/hour**	**lbs/hour**	tons/year	tons/year
17.6.	Carbon Monoxide (CO)		**lbs/hour**	**lbs/hour**	tons/year	tons/year

Emissions Information for Fourth Emission Point/Stack

17.7.	Volatile Organic Compounds (VOCs)		lbs/hour	lbs/hour	tons/year	tons/year
17.8.	Lead		lbs/hour	lbs/hour	tons/year	tons/year
17.9.			lbs/hour	lbs/hour	tons/year	tons/year
17.10.			lbs/hour	lbs/hour	tons/year	tons/year
17.11.			lbs/hour	lbs/hour	tons/year	tons/year
17.12.			lbs/hour	lbs/hour	tons/year	tons/year
17.13.			lbs/hour	lbs/hour	tons/year	tons/year
17.14.			lbs/hour	lbs/hour	tons/year	tons/year
17.15.			lbs/hour	lbs/hour	tons/year	tons/year
17.16.			lbs/hour	lbs/hour	tons/year	tons/year
17.17			lbs/hour	lbs/hour	tons/year	tons/year
17.18.			lbs/hour	lbs/hour	tons/year	tons/year

18. Provide Any Additional Information Necessary to Understanding the Emission Rates Provided Above:

Attach the Basis of Determination or Calculations for each Emission Rate provided above.

If there are more than four Emission Points/Stacks, attach additional copies of this form as needed.

Overall Process Emissions

19. Pollutant Emissions

If more than 18 pollutants are emitted from this Process, attach additional copies of this page as needed.

Pollutant Name (Specify VOCs and HAPs Individually in 19.10 through 19.18)	CAS Number (Not required for 19.1 through 19.9)	Maximum Uncontrolled Emission Rate at Design Capacity	Maximum Controlled Emission Rate at Design Capacity	Annual Potential to Emit (PTE)	Expected Annual Emissions

Overall Process Emissions

19.1.	Particulate Matter (PM)		**100 lbs/hour**	**0.30 lbs/hour**	**1.3** tons/year	**1.3** tons/year
19.2.	PM_{10}		**85 lbs/hour**	**0.26 lbs/hour**	**1.1** tons/year	**1.1** tons/year
19.3.	$PM_{2.5}$		**30 lbs/hour**	**0.09 lbs/hour**	**0.4** tons/year	**0.4** tons/year
19.4.	Sulfur Oxides (SO_X)		**lbs/hour**	**lbs/hour**	tons/year	tons/year
19.5.	Nitrogen Oxides (NO_X)		**lbs/hour**	**lbs/hour**	tons/year	tons/year
19.6.	Carbon Monoxide (CO)		**lbs/hour**	**lbs/hour**	tons/year	tons/year
19.7.	Lead		**lbs/hour**	**lbs/hour**	tons/year	tons/year
19.8.	Total Volatile Organic Compounds (VOCs)		**lbs/hour**	**lbs/hour**	tons/year	tons/year
19.9.	Total Hazardous Air Pollutants (HAPs)		**lbs/hour**	**lbs/hour**	tons/year	tons/year
19.10.			**lbs/hour**	**lbs/hour**	tons/year	tons/year
19.11.			**lbs/hour**	**lbs/hour**	tons/year	tons/year
19.12.			**lbs/hour**	**lbs/hour**	tons/year	tons/year
19.13.			**lbs/hour**	**lbs/hour**	tons/year	tons/year
19.14.			**lbs/hour**	**lbs/hour**	tons/year	tons/year
19.15.			**lbs/hour**	**lbs/hour**	tons/year	tons/year
19.16.			**lbs/hour**	**lbs/hour**	tons/year	tons/year
19.17			**lbs/hour**	**lbs/hour**	tons/year	tons/year
19.18.			**lbs/hour**	**lbs/hour**	tons/year	tons/year

20. Provide Any Additional Information Necessary to Understanding the Emission Rates Provided Above:

Attach the Basis of Determination or Calculations for each Emission Rate provided above.

Minor New Source Review Information

21. Does the Process Have the Potential to Emit More Than Five Tons Per Year of Any Pollutant? ☐ YES ☒ NO

22. Is the Source New or Existing? ☒ NEW ☐ EXISTING
See Question 11 of AQM-1

If the Process has the Potential to Emit more than five tons per year of any pollutant, and is a New Source, a Control Technology Analysis pursuant to Regulation No. 1125 Section 4 must be conducted and attached to this application.

Additional Information

23. Is There Any Additional Information Pertinent to this Application? ☐ YES ☒ NO

If YES, complete the rest of Question 23.

23.1. Describe:

APC-2009/0107-C

Silo Application

If you are using this form electronically, press F1 at any time for help

General Information

1. Facility Name: **Indian River Generating Station**
2. Equipment ID Number: **ID 26 Byproduct Storage Silo**
3. Manufacturer: **TBD**
4. Model: **TBD**
5. Serial Number: **TBD**
6. Silo Type: ☒ Tower Silo
   ☐ Bunker Silo
   ☐ Other (Specify):
7. Number of Compartments in Silo: **1**
8. Material Stored in Silo:

If there are more than three Materials Stored in the Silo, attach additional copies of this page as needed

	Material	Material Density	Compartment Stored In
8.1.	**Byproducts of CDS/PJFF System**	**38-65 pounds/cubic foot**	
8.2.		**tons/cubic foot**	
8.3.		**tons/cubic foot**	

Attach a Material Safety Data Sheet (MSDS) for each Material Stored in the Silo.

9. Silo Storage Capacity: **120,000 cubic feet**
10. Silo Loading Method: ☒ Pneumatic ☐ Vacuum
    ☐ Hydraulic ☐ Other (Specify):
    ☐ Mechanical
11. Maximum Rate of Silo Loading: **50 tons/hour**
12. Is the Silo Equipped With a Pressure-Vacuum Relief Valve? ☒ YES ☐ NO

If YES, complete the rest of Question 12. If NO, proceed to Question 13.

12.1. Describe the Pressure Relief Valve Settings: **TBD**

13. Is the Silo Equipped With a System That Prevents Overfilling? ☒ YES ☐ NO

If YES, complete the rest of Question 13. If NO, proceed to Question 14.

13.1. Describe the Overfilling Prevention System: **TBD**

General Information

14. Is the Silo Equipped With a Silo Level Monitoring System? ☒ YES ☐ NO

If YES, complete the rest of Question 14. If NO, proceed to Question 15.

14.1. Type of Level Indicator: ☐ Point ☒ Continuous ☐ Other (Specify):

15. Is the Silo Equipped With a Power/Control Panel with a High Level Indicator? ☒ YES ☐ NO

Control Device Information

16. Is an Air Pollution Control Device Used? ☒ YES ☐ NO

If an Air Pollution Control Device is used, complete the rest of Question 16. If not, proceed to Question 17.

16.1. Is Knockout Used? ☐ YES ☒ NO

If YES, complete Form AQM-4.11 and attach it to this application.

16.2. Is a Settling Chamber Used? ☐ YES ☒ NO

If YES, complete Form AQM-4.10 and attach it to this application.

16.3. Is an Inertial or Cyclone Collector Used? ☐ YES ☒ NO

If YES, complete Form AQM-4.5 and attach it to this application.

16.4. Is a Fabric Collector or Baghouse Used? ☒ YES ☐ NO

If YES, complete Form AQM-4.6 and attach it to this application.

16.5. Is a Venturi Scrubber Used? ☐ YES ☒ NO

If YES, complete Form AQM-4.8 and attach it to this application.

16.6. Is an Electrostatic Precipitator Used? ☐ YES ☒ NO

If YES, complete Form AQM-4.7 and attach it to this application.

16.7. Is Any Other Control Device Used? ☐ YES ☒ NO

If YES, attach a copy of the Control Device Manufacturer's Specification Sheets.

If Any Other Control Device is used, complete the rest of Question 16. If not, proceed to Question 17.

16.8. Describe Control Device:

16.9. Pollutants Controlled: ☐ HAPs ☐ PM ☐ PM_{10} ☐ $PM_{2.5}$ ☐ Metals ☐ Other (Specify):

16.10. Control Device Manufacturer:

16.11. Control Device Model:

16.12. Control Device Serial Number:

16.13. Control Device Design Capacity:

16.14. Control Device Removal or Destruction Efficiency:

Stack Information

17. How Does the Process Equipment Vent:
(check all that apply)
☐ Directly to the Atmosphere
☒ Through a Control Device Covered by Forms AQM-4.1 through 4.12
☐ Through Another Control Device Described on This Form

If any of the process equipment vents directly to the atmosphere or through another control device described on this form, proceed to Question 18. If the process equipment vents through a control device, provide the stack parameters on the control device form (AQM-4 Series) and proceed to Question 19.

18. Emission Point Name:

18.1. Stack Height Above Grade: **feet**

18.2. Stack Exit Diameter: **feet**
(Provide Stack Dimensions If Rectangular Stack)

18.3. Is a Stack Cap Present? ☐ YES ☐ NO

18.4. Stack Configuration: ☐ Vertical ☐ Horizontal ☐ Downward-Venting
(check all that apply) ☐ Other (Specify):

18.5. Stack Exit Gas Temperature: **°F**

18.6. Stack Exit Gas Flow Rate: **ACFM**

18.7. Distance to Nearest Property Line: **feet**

18.8. Describe Nearest Obstruction:

18.9. Height of Nearest Obstruction: **feet**

18.10. Distance to Nearest Obstruction: **feet**

18.11. Are Stack Sampling Ports Provided? ☐ YES ☐ NO

Monitoring Information

19. Will Emissions Data be Recorded by a Continuous Emission Monitoring System? ☐ YES ☒ NO

If Yes, attach a copy of the Continuous Emission Monitoring System Manufacturer's Specification Sheets

If YES, complete the rest of Question 19. If NO, proceed to Question 20.

19.1. Pollutants Monitored: ☐ VOCs ☐ HAPs ☐ PM ☐ PM_{10} ☐ $PM_{2.5}$ ☐ NO_X ☐ SO_X ☐ Metals
☐ Other (Specify):

19.2. Describe the Continuous Emission Monitoring System:

19.3. Manufacturer:

19.4. Model:

19.5. Serial Number:

19.6. Will Multiple Emission Units Be Monitored at the Same Point? ☐ YES ☐ NO

If YES, complete the rest of Question 19. If NO, proceed to Question 20.

19.7. Emission Units Monitored:

Monitoring Information

19.8. Will More Than One Emission Unit be Emitting From the Combined Point At Any Time? ☐ YES ☐ NO

If YES, complete the rest of Question 19. If NO, proceed to Question 20.

19.9. Emission Units Emitting Simultaneously:

Visible Emissions Monitoring Information

20. Proposed Technique Used to Monitor Visible Emissions:
☐ Opacity Monitor (COM)
☐ Manual (Method 9)
☒ Manual (Method 22)
☐ Other (Describe):

If an Opacity Monitor (COM) is used, complete the rest of Question 20. If not, proceed to Question 21.

20.1. Describe the Continuous Opacity Monitoring System:

20.2. Manufacturer:

20.3. Model:

20.4. Serial Number:

21. Proposed Frequency of Opacity Monitoring:

Monitoring and Alarm Information

22. Are There Any Alarms You Would Like the Department to Consider When Drafting the Permit? ☐ YES ☒ NO

If YES, complete the rest of Question 22. If NO, proceed to Question 23.

22.1. Describe the System Alarm(s):

If there are more than five alarms, attach additional copies of this page as needed.

	Operating Parameter Monitored	Describe Alarm Trigger	Monitoring Device or Alarm Type	Does the Alarm Initiate an Automated Response?
22.1.1.			☐ Visual ☐ Auditory ☐ Automatic (Remote Monitoring) ☐ Other	☐ NO ☐ YES Describe:
22.1.2.			☐ Visual ☐ Auditory ☐ Automatic (Remote Monitoring) ☐ Other	☐ NO ☐ YES Describe:
22.1.3.			☐ Visual ☐ Auditory ☐ Automatic (Remote Monitoring) ☐ Other	☐ NO ☐ YES Describe:

Monitoring and Alarm Information

22.1.4.			☐ Visual ☐ Auditory ☐ Automatic (Remote Monitoring) ☐ Other	☐ NO ☐ YES Describe:
22.1.5.			☐ Visual ☐ Auditory ☐ Automatic (Remote Monitoring) ☐ Other	☐ NO ☐ YES Describe:

Emissions Information

23. Do You Plan to Take Any Emission Limitations to Avoid Major Source Status, Minor New Source Review, MACT, NSPS, etc.? ☐ YES ☒ NO

If YES, complete the rest of Question 23. If NO, proceed to Question 24.

23.1. Describe Any Proposed Emission Limitations:

Operating Information

24. Do You Plan to Take Any Operating Limitations to Avoid Major Source Status, Minor New Source Review, MACT, NSPS, etc.? ☐ YES ☒ NO

If YES, complete the rest of Question 24. If NO, proceed to Question 25.

24.1. Describe Any Proposed Operating Limitations:

Additional Information

25. Is There Any Additional Information Pertinent to this Application? ☐ YES ☒ NO

If YES, complete the rest of Question 25.

25.1. Describe:

Baghouse Application

If you are using this form electronically, press F1 at any time for help

General Information

1.	Facility Name: **Indian River Generating Station**
2.	Equipment ID Number: **ID 26 Byproduct Storage Silo Bin Vent Filter**
3.	Manufacturer: **TBD**
4.	Model: **TBD**
5.	Serial Number: **NA**
6.	Is the Baghouse Insulated? ☒ YES ☐ NO
7.	Design Minimum Operating Temperature: **165 °F**
8.	Design Maximum Operating Temperature: **185 °F**
9.	Are Temperature Controls Provided? ☐ YES ☒ NO
If Yes, complete the rest of Question 9. If no, proceed to Question 10.	
9.1.	Describe the Temperature Controls:
10.	Air Flow Through Baghouse: ☐ Forced ☒ Induced ☐ Other (Specify):
11.	Direction of Flow Through Filters: ☐ Inside Out ☒ Outside In
12.	Particulate Removal Efficiency: **99.7 (avg.)** %
Attach the Manufacturer's Specification Sheet for the Baghouse and Particle Size Removal Efficiency Curve and basis of determination.	

Compartment Information

13.	Number of Compartments: **Single**
14.	Number of Filters (Bags) Per Compartment:
15.	Can the Compartments be Isolated for Replacement or Repair? ☐ YES ☐ NO

Gas Stream Information

16.	Maximum Inlet Volumetric Gas Flow Rate: **10,020 acfm at 130 °F**
17.	Maximum Outlet Volumetric Gas Flow Rate: **10,020 acfm at 130 °F**
18.	Dew Point at Maximum Moisture Content of Gas: **70 °F**

Gas Stream Information

19. pH of Gas Handled: **NA (air)**

20. Dust Characteristics: (Check All That Apply)
- ☐ Sticky
- ☐ Wet
- ☐ Corrosive
- ☒ Dry
- ☐ Other (Specify):

Contaminant Information

21. Percent of Each Contaminant in the Waste Gas and Removal Efficiency

If more than five Contaminants are present, attach additional copies of this page as needed.

	Contaminant Name	Contaminant CAS Number	Percent of Waste Gas	Removal Efficiency
21.1.	**PM/PM10**		%	**99.7 (avg.)** %
21.2.			%	%
21.3.			%	%
21.4.			%	%
21.5.			%	%

Fabric Filter (Bag) Information

22. Fabric Type:
- ☒ Felted
- ☐ Woven
- ☐ Felted-Woven
- ☐ Membrane
- ☐ PTFE Membrane
- ☐ Sintered Metal
- ☐ Ceramic Cartridge
- ☐ Other (Specify):

23. Fabric Material: **TBD**

24. Maximum Continuous Filter Operating Temperature: **185 °F**

25. Clean Fabric Permeability: **TBD** scfm/ft^2 at ΔP inches of water

26. Fabric Filter (Bag) Diameter or Width: **TBD inches**

27. Fabric Filter (Bag) Length: **TBD inches**

28. Effective Area Per Filter: **2505 (estimated-will depend on final design) square feet**

29. Minimum Effective Air to Cloth Ratio: 4:1 (estimated-will depend on final design) **inches**

30. Maximum Effective Air to Cloth Ratio: 4:1 (estimated-will depend on final design) **inches**

31. Design Pressure Drop Across Baghouse: 6-12 **inches water**

32. Describe Determining Factor Fabric Filter Changing/Replacement: **Bag filter based on visual inspection and/or differential pressure.**

Attach the Manufacturer's Specification Sheet for the Fabric Filters (Bags).

Filter Cleaning Information

33. Filter Cleaning Method: ☐ Manual Cleaning ☐ Bag Collapse ☐ Reverse Air Jet ☐ Mechanical Shakers ☐ Sonic Cleaning ☒ Pulse Jet ☐ Pneumatic Shakers ☐ Reverse Air Flow ☐ Other (Specify):

If Reverse Air Jet or Pulse Jet is used, complete the rest of Question 33. If not, proceed to Question 34.

33.1. Air Pressure: 60-120 (estimated) **psi**

33.2. Describe How Air Is Supplied to System: **From facility compressed air line**

34. Describe How Filter Cleaning Is Initiated: ☐ Manual ☒ Pressure Drop ☐ Timer ☐ Other (Specify):

Hopper Information

35. Is the Hopper Heated? ☐ YES ☐ NO

36. Is there a Hopper Vibrator? ☐ YES ☐ NO

37. Describe How Collected Material is Treated or Disposed of:

Stack Information

38. Emission Point Name: **ID 26**

38.1. Stack Height Above Grade: **180 feet**

38.2. Stack Exit Diameter: **TBD feet**
(Provide Stack Dimensions If Rectangular Stack)

38.3. Is a Stack Cap Present? ☐ YES ☒ NO

38.4. Stack Configuration: ☒ Vertical ☐ Horizontal ☐ Downward-Venting
(check all that apply) ☐ Other (Specify):

38.5. Stack Exit Gas Temperature: **185 °F**

38.6. Stack Exit Gas Flow Rate: **10,020 ACFM**

38.7. Distance to Nearest Property Line: **424 feet**

38.8. Describe Nearest Obstruction: **Surge Tank**

38.9. Height of Nearest Obstruction: **180 feet**

38.10. Distance to Nearest Obstruction: **165 feet**

Stack Information

38.11. Are Stack Sampling Ports Provided? ☐ YES ☒ NO

Monitoring and Alarm Information

39. Are There Any Alarms You Would Like the Department to Consider When Drafting the Permit? ☐ YES ☒ NO

If YES, complete the rest of Question 39. If NO, proceed to Question 40.

39.1. Describe the System Alarm(s):

If there are more than five alarms, attach additional copies of this page as needed.

	Operating Parameter Monitored	Describe Alarm Trigger	Monitoring Device or Alarm Type	Does the Alarm Initiate an Automated Response?
39.1.1.			☐ Visual ☐ Auditory ☐ Automatic (Remote Monitoring) ☐ Other	☐ NO ☐ YES Describe:
39.1.2.			☐ Visual ☐ Auditory ☐ Automatic (Remote Monitoring) ☐ Other	☐ NO ☐ YES Describe:
39.1.3.			☐ Visual ☐ Auditory ☐ Automatic (Remote Monitoring) ☐ Other	☐ NO ☐ YES Describe:
39.1.4.			☐ Visual ☐ Auditory ☐ Automatic (Remote Monitoring) ☐ Other	☐ NO ☐ YES Describe:
39.1.5.			☐ Visual ☐ Auditory ☐ Automatic (Remote Monitoring) ☐ Other	☐ NO ☐ YES Describe:

Additional Information

40. Is There Any Additional Information Pertinent to this Application? ☐ YES ☒ NO

If YES, complete the rest of Question 40.

40.1. Describe:

Emissions Information Application

If you are using this form electronically, press F1 at any time for help

Process Information

1.	Number of Individual Pieces of Process Equipment in Process: **1**
2.	Number of Individual Control Devices in Process: **1**

Emissions Information for First Emission Point/Stack

3.	Emission Point Name: **ID 26**
4.	Equipment ID Number for all Process Equipment and Control Devices Venting Through Emission Point/Stack: **ID 26**
5.	Pollutant Emissions

If more than 18 pollutants are emitted at this Emission Point/Stack, attach additional copies of this page as needed.

	Pollutant Name (Specify VOCs and HAPs Individually in 5.10 through 5.18)	CAS Number (Not required for 5.1 through 5.9)	Maximum Uncontrolled Emission Rate at Design Capacity	Maximum Controlled Emission Rate at Design Capacity	Annual Potential to Emit (PTE)	Expected Annual Emissions
5.1.	Particulate Matter (PM)		**234 lbs/hour**	**0.72 lbs/hour**	**3.2** tons/year	**3.2** tons/year
5.2.	PM_{10}		**120 lbs/hour**	**0.37 lbs/hour**	**1.6** tons/year	**1.6** tons/year
5.3.	$PM_{2.5}$		**35 lbs/hour**	**0.12 lbs/hour**	**0.5** tons/year	**0.5** tons/year
5.4.	Sulfur Oxides (SO_X)		**lbs/hour**	**lbs/hour**	tons/year	tons/year
5.5.	Nitrogen Oxides (NO_X)		**lbs/hour**	**lbs/hour**	tons/year	tons/year
5.6.	Carbon Monoxide (CO)		**lbs/hour**	**lbs/hour**	tons/year	tons/year
5.7.	Lead		**lbs/hour**	**lbs/hour**	tons/year	tons/year
5.8.	Total Volatile Organic Compounds (VOCs)		**lbs/hour**	**lbs/hour**	tons/year	tons/year

Emissions Information for First Emission Point/Stack

5.9.	Total Hazardous Air Pollutants (HAPs)		**lbs/hour**	**lbs/hour**	tons/year	tons/year
5.10.			**lbs/hour**	**lbs/hour**	tons/year	tons/year
5.11.			**lbs/hour**	**lbs/hour**	tons/year	tons/year
5.12.			**lbs/hour**	**lbs/hour**	tons/year	tons/year
5.13.			**lbs/hour**	**lbs/hour**	tons/year	tons/year
5.14.			**lbs/hour**	**lbs/hour**	tons/year	tons/year
5.15.			**lbs/hour**	**lbs/hour**	tons/year	tons/year
5.16.			**lbs/hour**	**lbs/hour**	tons/year	tons/year
5.17			**lbs/hour**	**lbs/hour**	tons/year	tons/year
5.18.			**lbs/hour**	**lbs/hour**	tons/year	tons/year

6. Provide Any Additional Information Necessary to Understanding the Emission Rates Provided Above:

Attach the Basis of Determination or Calculations for each Emission Rate provided above.

Emissions Information for Second Emission Point/Stack

7. Emission Point Name:

8. Equipment ID Number for all Process Equipment and Control Devices Venting Through Emission Point/Stack:

9. Pollutant Emissions

If more than 18 pollutants are emitted at this Emission Point/Stack, attach additional copies of this page as needed.

Pollutant Name (Specify VOCs and HAPs Individually in 9.10 through 9.18)	CAS Number (Not required for 9.1 through 9.9)	Maximum Uncontrolled Emission Rate at Design Capacity	Maximum Controlled Emission Rate at Design Capacity	Annual Potential to Emit (PTE)	Expected Annual Emissions

Emissions Information for Second Emission Point/Stack

9.1.	Particulate Matter (PM)		**lbs/hour**	**lbs/hour**	tons/year	tons/year
9.2.	PM_{10}		**lbs/hour**	**lbs/hour**	tons/year	tons/year
9.3.	$PM_{2.5}$		**lbs/hour**	**lbs/hour**	tons/year	tons/year
9.4.	Sulfur Oxides (SO_X)		**lbs/hour**	**lbs/hour**	tons/year	tons/year
9.5.	Nitrogen Oxides (NO_X)		**lbs/hour**	**lbs/hour**	tons/year	tons/year
9.6.	Carbon Monoxide (CO)		**lbs/hour**	**lbs/hour**	tons/year	tons/year
9.7.	Lead		**lbs/hour**	**lbs/hour**	tons/year	tons/year
9.8.	Total Volatile Organic Compounds (VOCs)		**lbs/hour**	**lbs/hour**	tons/year	tons/year
9.9.	Total Hazardous Air Pollutants (HAPs)		**lbs/hour**	**lbs/hour**	tons/year	tons/year
9.10.			**lbs/hour**	**lbs/hour**	tons/year	tons/year
9.11.			**lbs/hour**	**lbs/hour**	tons/year	tons/year
9.12.			**lbs/hour**	**lbs/hour**	tons/year	tons/year
9.13.			**lbs/hour**	**lbs/hour**	tons/year	tons/year
9.14.			**lbs/hour**	**lbs/hour**	tons/year	tons/year
9.15.			**lbs/hour**	**lbs/hour**	tons/year	tons/year
9.16.			**lbs/hour**	**lbs/hour**	tons/year	tons/year
9.17			**lbs/hour**	**lbs/hour**	tons/year	tons/year
9.18.			**lbs/hour**	**lbs/hour**	tons/year	tons/year

10. Provide Any Additional Information Necessary to Understanding the Emission Rates Provided Above:

Attach the Basis of Determination or Calculations for each Emission Rate provided above.

Emissions Information for Third Emission Point/Stack

11. Emission Point Name:

12. Equipment ID Number for all Process Equipment and Control Devices Venting Through Emission Point/Stack:

13. Pollutant Emissions

If more than 18 pollutants are emitted at this Emission Point/Stack, attach additional copies of this page as needed.

	Pollutant Name (Specify VOCs and HAPs Individually in 13.10 through 13.18)	CAS Number (Not required for 13.1 through 13.9)	Maximum Uncontrolled Emission Rate at Design Capacity	Maximum Controlled Emission Rate at Design Capacity	Annual Potential to Emit (PTE)	Expected Annual Emissions
13.1.	Particulate Matter (PM)		**lbs/hour**	**lbs/hour**	tons/year	tons/year
13.2.	PM_{10}		**lbs/hour**	**lbs/hour**	tons/year	tons/year
13.3.	$PM_{2.5}$		**lbs/hour**	**lbs/hour**	tons/year	tons/year
13.4.	Sulfur Oxides (SO_X)		**lbs/hour**	**lbs/hour**	tons/year	tons/year
13.5.	Nitrogen Oxides (NO_X)		**lbs/hour**	**lbs/hour**	tons/year	tons/year
13.6.	Carbon Monoxide (CO)		**lbs/hour**	**lbs/hour**	tons/year	tons/year
13.7.	Lead		**lbs/hour**	**lbs/hour**	tons/year	tons/year
13.8.	Total Volatile Organic Compounds (VOCs)		**lbs/hour**	**lbs/hour**	tons/year	tons/year
13.9.	Total Hazardous Air Pollutants (HAPs)		**lbs/hour**	**lbs/hour**	tons/year	tons/year
13.10.			**lbs/hour**	**lbs/hour**	tons/year	tons/year
13.11.			**lbs/hour**	**lbs/hour**	tons/year	tons/year
13.12.			**lbs/hour**	**lbs/hour**	tons/year	tons/year
13.13.			**lbs/hour**	**lbs/hour**	tons/year	tons/year
13.14.			**lbs/hour**	**lbs/hour**	tons/year	tons/year

Emissions Information for Third Emission Point/Stack

13.15.		**lbs/hour**	**lbs/hour**	tons/year	tons/year
13.16.		**lbs/hour**	**lbs/hour**	tons/year	tons/year
13.17		**lbs/hour**	**lbs/hour**	tons/year	tons/year
13.18.		**lbs/hour**	**lbs/hour**	tons/year	tons/year

14. Provide Any Additional Information Necessary to Understanding the Emission Rates Provided Above:

Attach the Basis of Determination or Calculations for each Emission Rate provided above.

Emissions Information for Fourth Emission Point/Stack

15. Emission Point Name:

16. Equipment ID Number for all Process Equipment and Control Devices Venting Through Emission Point/Stack:

17. Pollutant Emissions

If more than 18 pollutants are emitted at this Emission Point/Stack, attach additional copies of this page as needed.

	Pollutant Name (Specify VOCs and HAPs Individually in 17.10 through 17.18)	CAS Number (Not required for 17.1 through 17.9)	Maximum Uncontrolled Emission Rate at Design Capacity	Maximum Controlled Emission Rate at Design Capacity	Annual Potential to Emit (PTE)	Expected Annual Emissions
17.1.	Particulate Matter (PM)		**lbs/hour**	**lbs/hour**	tons/year	tons/year
17.2.	PM_{10}		**lbs/hour**	**lbs/hour**	tons/year	tons/year
17.3.	$PM_{2.5}$		**lbs/hour**	**lbs/hour**	tons/year	tons/year
17.4.	Sulfur Oxides (SO_X)		**lbs/hour**	**lbs/hour**	tons/year	tons/year
17.5.	Nitrogen Oxides (NO_X)		**lbs/hour**	**lbs/hour**	tons/year	tons/year
17.6.	Carbon Monoxide (CO)		**lbs/hour**	**lbs/hour**	tons/year	tons/year

Emissions Information for Fourth Emission Point/Stack

17.7.	Volatile Organic Compounds (VOCs)		**lbs/hour**	**lbs/hour**	tons/year	tons/year
17.8.	Lead		**lbs/hour**	**lbs/hour**	tons/year	tons/year
17.9.			**lbs/hour**	**lbs/hour**	tons/year	tons/year
17.10.			**lbs/hour**	**lbs/hour**	tons/year	tons/year
17.11.			**lbs/hour**	**lbs/hour**	tons/year	tons/year
17.12.			**lbs/hour**	**lbs/hour**	tons/year	tons/year
17.13.			**lbs/hour**	**lbs/hour**	tons/year	tons/year
17.14.			**lbs/hour**	**lbs/hour**	tons/year	tons/year
17.15.			**lbs/hour**	**lbs/hour**	tons/year	tons/year
17.16.			**lbs/hour**	**lbs/hour**	tons/year	tons/year
17.17			**lbs/hour**	**lbs/hour**	tons/year	tons/year
17.18.			**lbs/hour**	**lbs/hour**	tons/year	tons/year

18. Provide Any Additional Information Necessary to Understanding the Emission Rates Provided Above:

Attach the Basis of Determination or Calculations for each Emission Rate provided above.

If there are more than four Emission Points/Stacks, attach additional copies of this form as needed.

Overall Process Emissions

19. Pollutant Emissions

If more than 18 pollutants are emitted from this Process, attach additional copies of this page as needed.

Pollutant Name (Specify VOCs and HAPs Individually in 19.10 through 19.18)	CAS Number (Not required for 19.1 through 19.9)	Maximum Uncontrolled Emission Rate at Design Capacity	Maximum Controlled Emission Rate at Design Capacity	Annual Potential to Emit (PTE)	Expected Annual Emissions

Overall Process Emissions

19.1.	Particulate Matter (PM)		**234 lbs/hour**	**0.72 lbs/hour**	**3.2** tons/year	**3.2** tons/year
19.2.	PM_{10}		**120 lbs/hour**	**0.37 lbs/hour**	**1.6** tons/year	**1.6** tons/year
19.3.	$PM_{2.5}$		**35 lbs/hour**	**0.12 lbs/hour**	**0.5** tons/year	**0.5** tons/year
19.4.	Sulfur Oxides (SO_X)		**lbs/hour**	**lbs/hour**	tons/year	tons/year
19.5.	Nitrogen Oxides (NO_X)		**lbs/hour**	**lbs/hour**	tons/year	tons/year
19.6.	Carbon Monoxide (CO)		**lbs/hour**	**lbs/hour**	tons/year	tons/year
19.7.	Lead		**lbs/hour**	**lbs/hour**	tons/year	tons/year
19.8.	Total Volatile Organic Compounds (VOCs)		**lbs/hour**	**lbs/hour**	tons/year	tons/year
19.9.	Total Hazardous Air Pollutants (HAPs)		**lbs/hour**	**lbs/hour**	tons/year	tons/year
19.10.			**lbs/hour**	**lbs/hour**	tons/year	tons/year
19.11.			**lbs/hour**	**lbs/hour**	tons/year	tons/year
19.12.			**lbs/hour**	**lbs/hour**	tons/year	tons/year
19.13.			**lbs/hour**	**lbs/hour**	tons/year	tons/year
19.14.			**lbs/hour**	**lbs/hour**	tons/year	tons/year
19.15.			**lbs/hour**	**lbs/hour**	tons/year	tons/year
19.16.			**lbs/hour**	**lbs/hour**	tons/year	tons/year
19.17			**lbs/hour**	**lbs/hour**	tons/year	tons/year
19.18.			**lbs/hour**	**lbs/hour**	tons/year	tons/year

20. Provide Any Additional Information Necessary to Understanding the Emission Rates Provided Above:

Attach the Basis of Determination or Calculations for each Emission Rate provided above.

Minor New Source Review Information

21. Does the Process Have the Potential to Emit More Than Five Tons Per Year of Any Pollutant? ☐ YES ☒ NO

22. Is the Source New or Existing? ☒ NEW ☐ EXISTING
See Question 11 of AQM-1

If the Process has the Potential to Emit more than five tons per year of any pollutant, and is a New Source, a Control Technology Analysis pursuant to Regulation No. 1125 Section 4 must be conducted and attached to this application.

Additional Information

23. Is There Any Additional Information Pertinent to this Application? ☐ YES ☒ NO

If YES, complete the rest of Question 23.

23.1. Describe:

SECTION 4

Emission Calculations

Indian River Generating Station
Regulation 1102 Permit Application
New Source Emission Summary

Emission Unit ID	Summary of Potential Emissions (ton/yr)				
	Emission Unit Description	PM	PM10	PM2.5	NH3
20	Ammonia Unloading, Storage and Handling System				0.08
21	Unit 3 and 4 Pebble Lime Bulk Storage Silo	0.56	0.48	0.17	
22	Unit 3 Pebble Lime Day Silo 1	1.31	1.12	0.39	
23	Unit 3 Pebble Lime Day Silo 2	1.31	1.12	0.39	
24	Unit 4 Pebble Lime Day Silo 1	1.31	1.12	0.39	
25	Unit 4 Pebble Lime Day Silo 2	1.31	1.12	0.39	
26	Byproduct Storage Silo and Transfer System	3.16	1.61	0.52	
	Facility Total	8.98	6.55	2.27	0.08

Indian River Generating Station
Regulation 1102 Permit Application
Emission Units ID 3 and 4 - Common Stack
Emission Rates

Operational Parameters	Unit 3	Unit 4	References
Max Heat Input (MMBtu/hr)	1,904	5,091	Maximum unit heat input value
Max Operation (hrs/yr)	8,760	8,760	
Coal Heating Value (Btu/lb)	12,200	12,200	Typical bituminous coal heating value provided by NRG
Exhaust Flow (acfm)	790,000	2,115,000	Design conditions at full load and 160F, provided by Shaw Power
Moisture Content, %	12.5	13.5	Based on saturation tables at 160F
Exhaust Flow (scfm), dry, 70F	590,907	1,563,906	Calculated based on acfm

Normal Operation Potential Emissions:

	Emission Rates				Unit 3			Unit 4			Unit 3 and 4 Common Stack		
					Uncontrolled Emissions	Controlled Emissions		Uncontrolled Emissions	Controlled Emissions		Uncontrolled Emissions	Controlled Emissions	
Pollutant	Uncontrolled Unit 3	Uncontrolled Unit 4	Controlled Common Stack Outlet	Units	(lb/hr)	(lb/hr)	(ton/yr)	(lb/hr)	(lb/hr)	(ton/yr)	(lb/hr)	(lb/hr)	(ton/yr)
NOx [1,2]	0.37	0.42	0.1	lb/MMBtu	704	190	834	2,138	509	2,230	2,843	700	3,064
SO2 [1,2]	4.50	4.50	0.2	lb/MMBtu	8,568	381	1,668	22,910	1,018	4,460	31,478	1,399	6,128
CO [3]	0.5	0.5	0.5	lb/ton	39	39	171	104	104	457	143	143	628
PM [2]	0.3	0.1	0.075	lb/MMBtu	571	143	625	509	382	1,672	1,080	525	2,298
PM-10 [2]	0.3	0.1	0.075	lb/MMBtu	571	143	625	509	382	1,672	1,080	525	2,298
PM-2.5 [2]	0.3	0.1	0.075	lb/MMBtu	571	143	625	509	382	1,672	1,080	525	2,298
Ammonia Slip [4]	15	15	10	ppmvd	23	16	68	62	41	181	86	57	250
Hg [2,5]	NA	NA	0.6	lb/TBtu	0.011	0.001	0.01	0.031	0.003	0.01	0.042	0.004	0.0129

Notes:
1. NOx and SO2 uncontrolled emission rates provided by NRG as design basis.
2. NOx, SO2, PM, and Hg outlet emission rates are based on Title V Permit and Consent Decree limits.
3. CO emission rate from AP-42, Table 1.1-3, 9/98.
4. Uncontrolled ammonia emissions are based on current permit limits for SNCR operation. Controlled ammonia emission rates are based on estimated slip from SCR operation.
5. Mercury lb/hr emission estimates were calculated using the consent decree limit of 0.6 lb/Tbtu and ton/year emission estimate is based on the annual mercury mass cap of 134 ounces/year for Unit 3 and 278 ounces/year for Unit 4 for a total of 412 ounces/year combined.

Ammonia Unloading, Storage and Handling System (1)

TANKS Input Parameters[1]	Units	Value	Source
Tank Volume	gallons	45,000	Vendor Information
Tank Length	feet	65.00	Vendor Information
Tank Diameter	feet	11.00	Vendor Information
Tank Type		Horizontal	Vendor Information
Tank Color		White	Vendor Information
Number of Identical Tanks:		2	
Tank Contents:			
Ammonia	%	29	Vendor Information
Water	%	71	Vendor Information
Aqueous Ammonia Density	lb/gal	7.46	MSDS for Aqueous Ammonia
Max. Amount Aq. Ammonia Injected	tons/year	13,797	Based on 100% capacity, 8760 hrs/year
Maximum Annual Throughput (total)	gallons/year	3,698,928	Based on injection rate
Maximum Annual Throughput (per tank)	gallons/year	1,849,464	Total divided by number of tanks
Nearest Major City: Wilmington, DE			

Emissions as Calculated by TANKS per Tank:

	NH3	NH3
	lb/year	TPY
Breathing Losses	17	0.01
Working Losses	64	0.03
Total NH3 Emissions	82	0.04

Total Ammonia Tank Emissions (all tanks)

	NH3	NH3
	lb/year	TPY
Breathing Losses	35	0.02
Working Losses	128	0.06
Total NH3 Emissions	163	0.08

Notes:
(1) The ammonia storage system will include a total storage capacity of 90,000 gallons. Based on final design, the number and size of tanks may vary; however, two identical tanks were used to conservatively estimate ammonia emissions.
(2) Emissions calculated by US EPA's TANKs Program, Version 4.0.9d.

Pete Lime Bk Storag Silo iWB Vnt Rter Q

Bi Vnt Rter Bsig Conditions:

Parameter	Units	Value	Source
Exhaust Flow Rate from Bin Vent Filter	scfm	1,500	Vendor Information
Control Efficiency	%	99.70	AP-42 basis, accepted by DNREC in Title V Technical Memo
Controlled Particulate Emission Rate	gr/dscf	0.01	Vendor Information
Hours of Operation	hr/yr	8,760	Conservative Approximation

Potential Emission Calclations:

Particle Size Distribution:[2]	
PM10 wt% of PM (uncontrolled)	85
PM2.5 wt% of PM (uncontrolled)	30

Pollutant	Hourly Emissions (lbs/hr)		Annual Emissions (tons/year)	
	Uncontrolled	Controlled	Uncontrolled	Controlled
PM	43	0.13	188	0.6
PM10	36	0.11	160	0.5
PM2.5	13	0.04	56	0.2

References:

(1) Bin Vent Filter design conditions provided by Shaw Power based on vendor information.

(2) Particle size distribution from AP-42, Appendix B.2, Table B.2.2, Category 4, material handling of processed ores and minerals.

Unit 3 Pebble Lime Day Silo 1 with Bin Vent Filter (ID 22)

Bin Vent Filter Design Conditions:[1]

Parameter	Units	Value	Source
Exhaust Flow Rate from Bin Vent Filter	scfm	3,500	Vendor Information
Control Efficiency	%	99.70	AP-42 basis, accepted by DNREC in Title V Technical Memo
Controlled Particulate Emission Rate	gr/dscf	0.01	Vendor Information
Hours of Operation	hr/yr	8,760	Conservative Approximation

Potential Emission Calculations:

Particle Size Distribution:[2]

PM10 wt% of PM (uncontrolled)	85
PM2.5 wt% of PM (uncontrolled)	30

Pollutant	Hourly Emissions (lbs/hr)		Annual Emissions (tons/year)	
	Uncontrolled	Controlled	Uncontrolled	Controlled
PM	100	0.30	438	1.3
PM10	85	0.26	372	1.1
PM2.5	30	0.09	131	0.4

References:

(1) Bin Vent Filter design conditions provided by Shaw Power based on vendor information.

(2) Particle size distribution from AP-42, Appendix B.2, Table B.2.2, Category 4, material handling of processed ores and minerals.

Unit 3 Pebble Lime Day Silo 2 with Bin Vent Filter (ID 23)

Bin Vent Filter Design Conditions[1]

Parameter	Units	Value	Source
Exhaust Flow Rate from Bin Vent Filter	scfm	3,500	Vendor Information
Control Efficiency	%	99.70	AP-42 basis, accepted by DNREC in Title V Technical Memo
Controlled Particulate Emission Rate	gr/dscf	0.01	Vendor Information
Hours of Operation	hr/yr	8,760	Conservative Approximation

Potential Emission Calculations:

Particle Size Distribution:[2]

PM10 wt% of PM (uncontrolled)	85
PM2.5 wt% of PM (uncontrolled)	30

Pollutant	Hourly Emissions (lbs/hr)		Annual Emissions (tons/year)	
	Uncontrolled	Controlled	Uncontrolled	Controlled
PM	100	0.30	438	1.3
PM10	85	0.26	372	1.1
PM2.5	30	0.09	131	0.4

References:

(1) Bin Vent Filter design conditions provided by Shaw Power based on vendor information.

(2) Particle size distribution from AP-42, Appendix B.2, Table B.2.2, Category 4, material handling of processed ores and minerals.

Unit 4 Pebble Lime Day Silo 1 with Bin Vent Filter (ID 24)

Bin Vent Filter Design Conditions:[1]

Parameter	Units	Value	Source
Exhaust Flow Rate from Bin Vent Filter	scfm	3,500	Vendor Information
Control Efficiency	%	99.70	AP-42 basis, accepted by DNREC in Title V Technical Memo
Controlled Particulate Emission Rate	gr/dscf	0.01	Vendor Information
Hours of Operation	hr/yr	8,760	Conservative Approximation

Potential Emission Calculations:

Particle Size Distribution:[2]

PM10 wt% of PM (uncontrolled)	85
PM2.5 wt% of PM (uncontrolled)	30

Pollutant	Hourly Emissions (lbs/hr)		Annual Emissions (tons/year)	
	Uncontrolled	Controlled	Uncontrolled	Controlled
PM	100	0.30	438	1.3
PM10	85	0.26	372	1.1
PM2.5	30	0.09	131	0.4

References:

(1) Bin Vent Filter design conditions provided by Shaw Power based on vendor information.

(2) Particle size distribution from AP-42, Appendix B.2, Table B.2.2, Category 4, material handling of processed ores and minerals.

Unit 4 Pebble Lime Day Silo 2 with Bin Vent Filter (ID 25)

Bin Vent Filter Design Conditions:[1]

Parameter	Units	Value	Source
Exhaust Flow Rate from Bin Vent Filter	scfm	3,500	Vendor Information
Control Efficiency	%	99.70	AP-42 basis, accepted by DNREC in Title V Technical Memo
Controlled Particulate Emission Rate	gr/dscf	0.01	Vendor Information
Hours of Operation	hr/yr	8,760	Conservative Approximation

Potential Emission Calculations:

Particle Size Distribution:[2]	
PM10 wt% of PM (uncontrolled)	85
PM2.5 wt% of PM (uncontrolled)	30

Pollutant	Hourly Emissions (lbs/hr)		Annual Emissions (tons/year)	
	Uncontrolled	Controlled	Uncontrolled	Controlled
PM	100	0.30	438	1.3
PM10	85	0.26	372	1.1
PM2.5	30	0.09	131	0.4

References:
(1) Bin Vent Filter design conditions provided by Shaw Power based on vendor information.
(2) Particle size distribution from AP-42, Appendix B.2, Table B.2.2, Category 4, material handling of processed ores and minerals.

Bulk Byproduct Storage Silo and Transfer System (ID 26)

Silo Potential Emissions:

Bin Vent Filter Design Conditions:[1]

Parameter	Units	Value	Source
Exhaust Flow Rate from Bin Vent Filter	scfm	8,200	Vendor Information
Control Efficiency	%	99.70	AP-42 basis, accepted by DNREC in Title V Technical Memo
Controlled Particulate Emission Rate	gr/dscf	0.01	Vendor Information
Hours of Operation	hr/yr	8,760	Conservative Approximation
Particle Size Distribution:[2]			
PM10 wt% of PM (uncontrolled)	51		
PM2.5 wt% of PM (uncontrolled)	15		

Pollutant	Hourly Emissions (lbs/hr)		Annual Emissions (tons/year)	
	Uncontrolled	Controlled	Uncontrolled	Controlled
PM	234	0.70	1026	3.1
PM10	119	0.36	523	1.6
PM2.5	35	0.11	154	0.5

References:
(1) Bin Vent Filter design conditions provided by Shaw Power based on vendor information.
(2) Particle size distribution from AP-42, Appendix B.2, Table B.2.2, Category 3, material handling of aggregate and unprocessed ores.

Unloading Silo to Trucks Drop Point Potential Emissions:

Emission Factor (EF) Equation:[1]

EF (lb/ton) = k * 0.0032 * ((U / 5) ^ 1.3 / (M/2) ^ 1.4)

Parameter	Units	Value	Source
PM Particle size multiplier, k		0.74	AP-42, Chapter 13.2.4
PM-10 Particle size multiplier, k		0.35	AP-42, Chapter 13.2.4
PM-2.5 Particle size multiplier, k		0.53	AP-42, Chapter 13.2.4
Mean wind speed, U	mph	9	CCD 2007 (Wilmington, DE)
Material moisture content, M	%	5	Minimum moisture content
Calculated PM EF	lb/ton	1.41E-03	AP-42, Chapter 13.2.4
Calculated PM EF	lb/ton	6.67E-04	AP-42, Chapter 13.2.4
Calculated PM EF	lb/ton	1.01E-03	AP-42, Chapter 13.2.4
Max. Byproduct Loading, dry	TPY	438,000	Vendor information
Max. Byproduct Loading, wet	TPY	459,900	Calculated from moisture content
Control Efficiency[2]	%	75	Telescopic chute
Hours of Operation	hr/yr	8,760	Conservative Approximation

Pollutant	Hourly Emissions (lbs/hr)		Annual Emissions (tons/year)	
	Uncontrolled	Controlled	Uncontrolled	Controlled
PM	0.074	0.019	0.32	0.081
PM10	0.035	0.009	0.15	0.038
PM2.5	0.053	0.013	0.23	0.058

References:
(1) Emission factor equation is from AP-42 Section 13.2.4, 11/06
(2) Control efficiency from Air Pollution Engineering Manual by Air and Waste Management Association.

Total Emissions from Byproduct Bulk Storage Silo and Transport System:

Pollutant	Hourly Emissions (lbs/hr)		Annual Emissions (tons/year)	
	Uncontrolled	Controlled	Uncontrolled	Controlled
PM	234.36	0.72	1026.50	3.16
PM10	119.52	0.37	523.50	1.61
PM2.5	35.20	0.12	154.16	0.52

Total emissions include emissions from bin vent filter plus emissions from unloading silo to trucks.

Emergency Diesel Quench Water Pump (252 HP) - Insignificant Activity - Reg. 1102, App. A, 33. (ID 27)

Parameter	Units	Value	Source
Rating	HP	252	Vendor Information
Expected hours of operation	hrs/yr	6.00	Based on testing pump for 30 min, once/month
Maximum hours of operation	hrs/yr	500	Limit for emergency equipment
NOx Emission Rate	lb/hp-hr	0.03	AP-42, Table 3.3-1
CO Emission Rate	lb/hp-hr	6.68E-03	AP-42, Table 3.3-1
SOx Emission Rate	lb/hp-hr	2.05E-03	AP-42, Table 3.3-1
PM-10 Emission Rate	lb/hp-hr	2.20E-03	AP-42, Table 3.3-1
VOC Emission Rate	lb/hp-hr	2.51E-03	AP-42, Table 3.3-1

Potential Emission Calculations:

Pollutant	Expected Emissions		Potential Emissions	
	lbs/hr	TPY	lbs/hr	TPY
NOx	8	0.023	8	1.95
CO	2	0.005	2	0.42
SOx	1	0.002	1	0.13
PM-10	1	0.002	1	0.14
VOC	1	0.002	1	0.16

SECTION 5

Material Safety Data Sheets

TANNER INDUSTRIES, INC.

1-800-643-6226
www.tannerind.com

aqua ammonia: MSDS (Material Safety Data Sheet)

Tanner Industries, Inc. divisions: National Ammonia, Northeastern Ammonia, Hamler Industries, Bower Ammonia & Chemical
35 Davisville Road, Third Floor, Southampton, PA 18966; 215-322-1238

Corporate emergency telephone number: 800-643-6226
Chemtrec: 800-424-9300

Overview:

:: Description
:: Statement of Health Hazard
:: General Physical Data
:: Emergency Treatment
:: Fire and Explosion
:: Hazard Data
:: Chemical Reactivity
:: Spill or Leak Procedures
:: Special Protection and Procedures
:: Special Precautions
:: Labeling and Shipping
:: Solution-Specific Physical Data
:: Other Regulatory Requirements
:: Disclaimer

Description

Chemical Name: Ammonium Hydroxide Solutions (10% to 30%)
CAS Registry No: 1336-21-6
Synonyms: Aqua Ammonia
Chemical Family: Inorganic nitrogen compounds

Formula: NH_4OH (NH_3 + H_2O)

Molecular Weight: 35.05 (NH_4OH)

Composition: Solutions: Anhydrous Ammonia (10% to 30%); Water (90% to 70%); Density: 6° Baumé to 26° Baumé

Ammonia, Anhydrous: CAS # 7664-41-7; Water: CAS# 7732-18-5

Statement of Health Hazard

Hazard Description

Ammonia is an irritant and corrosive to the skin, eyes, respiratory tract and mucous membranes. May cause severe chemical burns to the eyes, lungs and skin. Skin and respiratory related diseases could be aggravated by exposure.

- Not recognized by OSHA as a carcinogen
- Not listed in the National Toxicology Program
- Not listed as a carcinogen by the International Agency for Research on Cancer

Exposure Limits for Ammonia: Vapor

OSHA	50 ppm	35 mg / m^3 PEL	8 hour TWA
NIOSH	35 ppm	27 mg / m^3 STEL	15 minutes
	25 ppm	18 mg / m^3 REL	10 hour TWA
	300 ppm	IDLH	
ACGIH	25 ppm	18 mg / m^3 TLV	8 hour TWA
	35 ppm	27 mg / m^3 STEL	15 minutes

Toxicity: LD 50 (ammonia) (Oral / Rat) 350 mg / kg

General Physical Data

Appearance and Odor: Colorless liquid with a pungent odor

Solubility in Water: Miscible

Specific Gravity of Vapor (air = 1): 0.596 at 32°F

Weight (per gallon): 7.46 pounds to 7.71 pounds

Evaporation Rate (water = 1): Similar

pH: 13+

To see Solution-Specific Physical Data (Page 2) download the Aqua Ammonia manual (pdf)

Emergency Treatment

Effects of Overexposure

Eye: Tearing, edema or blindness may occur. Vapors cause irritation. Effects of direct contact may range from irritation and lacrimation to severe injury and blindness.

Skin: Irritation, corrosive burns, blister formation may result. Contact with liquid may produce caustic burns.

Inhalation: Acute exposure to vapor may result in severe irritation of the respiratory tract, bronchospasm, edema or respiratory arrest.

Ingestion: May cause corrosion to the esophagus and stomach with perforation and peritonitis. ***Extreme exposure may result in death from spasm, inflammation or edema.***

Emergency Aid

Remove patient to uncontaminated area

Eye: Immediately flush with copious amounts of tepid water for a minimum of 20 minutes. Eyelids should be held apart and away from eyeball for thorough rinsing.

Skin: Immediately flush with copious amounts of tepid water for a minimum of 20 minutes while removing contaminated clothing, jewelry and shoes. Do not rub or apply topical, occlusive compounds, such as ointments, certain creams, etc., on affected area.

Inhalation: Immediately remove to fresh air. If not breathing, administer artificial respiration. If trained to do so, administer supplemental oxygen, if required.

Ingestion: If conscious, give large amounts of water to drink. May drink orange juice, citrus juice or diluted vinegar (1:4) to counteract ammonia. If unconscious, do not give anything by mouth. **DO NOT INDUCE VOMITING!**

SEEK IMMEDIATE MEDICAL HELP FOR ALL EXPOSURES!

Note to Physician

Respiratory injury may appear as a delayed phenomenon. Pulmonary edema may follow chemical bronchitis. Supportive treatment with necessary ventilation actions, including oxygen, may warrant consideration.

Fire and Explosion Hazard Data

Flashpoint: None

Flammable Limits in Air: LEL/UEL 16% to 25% (listed in the *NIOSH Pocket Guide to Chemical Hazards* 15% to 28%)

Extinguishing Media: Dry Chemical, CO_2, water spray or alcohol-resistant foam if gas flow cannot be stopped

Auto Ignition Temperature: 1,204°F (If catalyzed), 1,570°F (If un-catalyzed)

Special Fire-Fighting Procedures

Must wear protective clothing and a positive pressure SCBA. Stop source if possible. If a portable container (such as a drum, Intermediate Bulk Container [IBC] or trailer) can be moved from the fire area without risk to the individual, do so to prevent the pressure relief valve from discharging or the container from failing. Fight fires using dry chemical, carbon dioxide, water spray or alcohol-resistant foam. Cool fire exposed containers with water spray. Stay upwind when containers are threatened. Use water spray to knock down vapor and dilute.

Unusual Fire and Explosion Hazards

When heated, product will give off ammonia vapor, which is a strong irritant to the eye, skin and respiratory tract.

- Outdoors, ammonia is not generally a fire hazard. Indoors, in confined areas, ammonia vapors may be a fire hazard, especially if oil and other combustible materials are present.

Combustion may form toxic nitrogen oxides.
• If relief valves are inoperative, heat-exposed storage containers may become explosion hazards due to over pressurization.

Chemical Reactivity

Stability

Stable at room temperature. Ammonium Hydroxide will react exothermically with acids. Will not polymerize. Ammonia vapors are released when heated.

Conditions to Avoid

• Avoid Ammonium Hydroxide contact with chemicals such as mercury, chlorine, iodine, bromine, silver oxide or hypochlorites; they can form explosive compounds.
• Avoid Ammonium Hydroxide contact with chlorine, which forms a chloramine gas, which is a primary skin irritant and sensitizer.
• Ammonium Hydroxide has a corrosive reaction with galvanized surfaces, copper, brass, bronze, aluminum alloys, mercury, gold and silver.

Hazardous Decomposition Products

Ammonia will be liberated if heated. Hydrogen will be released on heating ammonia above 450° C (842°F).

Spill or Leak Procedures

Steps to be Taken

Stop source of leak if possible, provided it can be done in a safe manner. Leave the area of a spill by moving laterally and upwind. Isolate the affected area. Non-responders should evacuate the area, or shelter in place. Only properly trained and equipped persons should respond to an ammonium hydroxide release. Wear eye, hand and respiratory protection and protective clothing; see PROTECIVE EQUIPMENT. Stay upwind and use water spray downwind of container to absorb the evolved gas. Contain spill and runoff from entering drains, sewers, and water systems by utilizing methods such as diking, containment, and absorption.

Waste Disposal

Listed as hazardous substance under CWA (40 CFR 116.4 and 40 CFR 117.3). Reportable Quantity 1,000 pounds (as NH_4OH). Classified as hazardous waste under RCRA (40 CFR 261.22 Corrosive #D002). Comply with all regulations. Suitably diluted product may be utilized as fertilizer on agricultural land. Keep spill from entering streams, lakes, or any water systems.

Special Protection and Procedures

Respiratory Protection

Respiratory protection approved by NIOSH/MSHA for ammonia must be used when applicable safety and health exposure limits are exceeded. For escape in emergencies, MSHA / NIOSH approved respiratory protection that consists of a full-face gas mask and canisters approved for ammonia is required. Refer to 29 CFR 1910.134 and ANSI: Z88.2 for requirements and

selection. A positive pressure SCBA is required for entry into ammonia atmospheres at or above 300 ppm (IDLH).

Eye Protection
Chemical splash goggles should be worn when handling ammonium hydroxide (aqua ammonia). A face shield can be worn over chemical splash goggles as additional protection. Do not wear contact lenses when handling ammonium hydroxide.

Ventilation
Local exhaust should be sufficient to keep ammonia vapor to 25 ppm or less.

Protective Equipment
• At a minimum, splash proof, chemical safety goggles, ammonium hydroxide resistant gloves (such as rubber), and ammonium hydroxide-impervious clothing should be worn to prevent contact during normal loading, unloading and transfer operations and handling small spills. Face shield and boots can be worn as additional protection.
• Respiratory protection approved by NIOSH/MSHA for ammonia must be used when applicable safety and health exposure limits are exceeded. For a hazardous material release response, Level A and/or Level B ensemble including positive-pressure SCBA should be used. A positive pressure SCBA is required for entry into ammonia atmospheres at or above 300 ppm (IDLH). Refer to 29 CFR 1910.132 through 1910.138 for personal protective equipment requirements.

Special Precautions
Storage and Handling
Only trained persons should handle ammonium hydroxide. Store in cool, dry and well-ventilated areas, with containers tightly closed. Keep out of direct sunlight and away from heat sources. Do not use any non-ferrous metals such as copper, brass, bronze, aluminum, tin, zinc or galvanized metals. Protect containers from physical damage. Closed storage tanks should be provided with safety relief valves and vacuum breakers as necessary.

Work-Place Protective Equipment
Protective equipment should be stored near, but outside of ammonium hydroxide area. Water for first aid, such as an eyewash station and safety shower should be kept available in the immediate vicinity.

Disposal
See WASTE DISPOSAL. Classified as RCRA Hazardous Waste due to corrosivity with designation D002, if disposed of in original form.

Labeling and Shipping
Hazard Class: 8 [Corrosive Material]
Proper Shipping Description: Ammonia Solutions, 8, UN2672, PG III, RQ
Placard: Corrosive

Identification No: UN 2672

National Fire Protection Assoc. Hazardous Rating and Hazardous Materials Identification System Labels:

Ammonium Hydroxide

HEALTH = 3

FLAMMABILITY = 1

REACTIVITY = 0

PERSONAL PROTECTION = H

Solution-Specific Physical Data

	20.5° Baumé	25° Baumé	26° Baumé
Ammonia Percentage	18.5% to 19.5%	26.5% to 27.5%	29.4% to 30.0%
Water Percentage	81.5% to 80.5%	73.5% to 72.5%	70.6% to 70.0%
Specific Gravity (water = 1)	0.9309 to 0.9278 at 60°F	0.9060 to 0.9030 at 60°F	0.8974 to 0.8957 at 60°F
Boiling Point	124°F at 14.7 psia	88°F at 14.7 psia	84.9°F at 14.7 psia
Vapor Pressure	3.9 psia at 60°F	6.9 psia at 60°F	9.1 psia at 60°F
Approximate Freezing Point	-32°F	-89°F	-110°F

Other Regulatory Requirements

Under the Comprehensive Environmental Response, Compensation, and Liability Act of 1980 (CERCLA), Section 103, any environmental release of this chemical equal to or over the reportable quantity of 1,000 pounds (as NH_4OH) must be reported promptly to the National Response Center, Washington, D.C. (1-800-424-8802).

The material is subject to the reporting requirements of Section 304, Section 312 and Section 313, Title III of the Superfund Amendments and Reauthorization Act (SARA) of 1986 and 40 CFR 372. Under Section 313, as of June 30, 1995, this material is reportable with the following qualifications: 10% of total aqueous ammonia is reportable as Ammonia (CAS #: 7664-41-7) under this listing.

Toxic Substances Control Act (TSCA): This material and its components are listed in the TSCA Inventory.

EPA Hazard Categories - Immediate: Yes; Delayed: No; Fire: No; Sudden Release: No; Reactive: No.

Clean Air Act – Section 112(r): Material is listed under EPA's Risk Management Program (RMP),

40 CFR Part 68 at concentrations greater than 20% and storage/process amounts greater than the Threshold Quantity (TQ) of 20,000 pounds of contained Ammonia (CAS #: 7664-41-7).

Disclaimer

The information, data, and recommendations in this material safety data sheet relate only to the specific material designated herein and do not relate to use in combination with any other material or in any process. The information, data, and recommendations set forth herein are believed by us to be accurate. We make no warranties, either expressed or implied, with respect thereto and assume no liability in connection with any use of such information, data, and recommendations.

Revision: February 2006 Prepared By: JRP

SHARE

GRAYMONT

MATERIAL SAFETY DATA SHEET

SECTION I - CHEMICAL PRODUCT AND COMPANY INFORMATION

Product Name: **HIGH CALCIUM QUICKLIME**	**WHMIS – CLASSIFICATION:** **D2A / D2B: MATERIALS CAUSING OTHER TOXIC EFFECTS** **E: CORROSIVE MATERIAL**

MANUFACTURER'S AND SUPPLIER'S NAME:

GRAYMONT (NB) INC	4634, Route 880, Havelock, New Brunswick, E4Z 5K8.
GRAYMONT (QC) INC.	25, rue De Lauzon, Boucherville (Québec), J4B 1E7.
GRAYMONT (PA) INC.	965, East College avenue, Pleasant Gap, PA 16823
GRAYMONT (WESTERN CANADA) INC.	190 – 3025, 12 Street N.E., Calgary, Alberta, T2E 7J2
GRAYMONT (WESTERN US) INC.	3950 South, 700 East, Suite 301, Salt Lake City, Utah 84107

EMERGENCY TEL. No.: (613) 996 – 6666 CANUTEC (Canada) (800) 424 – 9300 CHEMTREC (US)

Chemical Name	Chemical Family	Chemical Formula
Calcium oxide	**Alkaline earth oxide**	**Complex mixture - mostly CaO**
Molecular Weight	Trade Name and Synonyms	Material Use
CaO = 56.08	**High Calcium Quicklime, Lime, Quicklime, Calcium Oxide, Burnt Lime, Fluxing Lime.**	**Neutralization, Flocculation, Flux (met.), Caustic agent, absorption**

SECTION II - COMPOSITION AND INFORMATION ON INGREDIENTS

Hazardous Ingredients	Approximate Concentration	C.A.S. Number	Exposure limits (mg/m^3)					
			OSHA PEL	ACGIH TLV	RSST VEMP	MSHA PEL (Note2)	NIOSH REL	NIOSH IDLH
(Complex Mixture)	(% by weight)		(TWA) 8/40h	(TWA) 8/40h	(TWA) 8/40h	(TWA) 8/40h	(TWA) 10/40h	
Calcium Oxide	**90 to 100**	**1305-78-8**	**5**	**2**	**2**	**5**	**2**	**25**
Crystalline Silica, Quartz	**0.1 to 1**	**14808-60-7**	**10/(%SiO_2)+2 respirable silica dust**	**0.025 respirable silica dust**	**0.1 respirable silica dust**	**10/(%SiO_2)+2 respirable silica dust**	**0.05 respirable free silica**	**50**
Crystalline Silica, Quartz	**0 to 0.1** (Note 1)	**14808-60-7**	**10/(%SiO2)+2 respirable silica dust**	**0.025 respirable silica dust**	**0.1 respirable silica dust**	**10/(%SiO2)+2 respirable silica dust**	**0.05 respirable free silica**	**50**

(Note 1) : Concentration of crystalline silica in a series of lime products will vary from source to source. It was not detected on some samples (< 0.1% w/w). Therefore two ranges are being disclosed. **(Note 2)** : ACGIH TLV Version 1973 has been adopted by the Mine Safety Health Administration (MSHA) as the regulatory Exposure Standard.

SECTION III - PHYSICAL AND CHEMICAL DATA

Physical State	Odor and Appearance		Odor Threshold (p.p.m.)	Specific Gravity
Gas ☐ Liquid ☐ Solid ☑	**Slight earthy odor - White crystalline substance**		**Not applicable**	**3.2 - 3.4**
Vapor Pressure (mm)	Vapor Density (Air = 1)	Evaporation Rate	Boiling Point (°C)	Melting Point (°C)
Not applicable	**Not applicable**	**Not applicable**	**2850**	**2580**
Solubility in Water (20°C)	Volatiles (% by volume)	pH (25 °C)	Bulk Density (kg/m^3)	Coefficient of water/oil distribution
0.125g/100g Sat.soln	**Not applicable**	**Sat. soln CaO 12.45**	**720 - 1130**	**Not applicable**

SECTION IV - FIRE OR EXPLOSION HAZARD DATA

Flammability

Yes ☐ No ☑ If yes, under which conditions?

Extinguishing Media

Quicklime does not burn. Use extinguisher appropriate for material burning.

Special Fire Fighting Procedures

Avoid using water unless necessary for other materials, in which case, flood to absorb heat generated. (Contact with water will evolve heat and could cause ignition of paper, cardboard, etc.). Wear self-contained breathing equipment approved by NIOSH.

Flash point (°C) and Method	Upper flammable limit (% by volume)	Lower flammable limit (% by volume)
Not applicable	**Not applicable**	**Not applicable**
Auto Ignition Temperature (°C)	TDG Flammability Classification	Hazardous Combustion Products
Not applicable	**Non-flammable**	**None**

Dangerous Combustion Products **None**

EXPLOSION DATA

Sensitivity to Chemical Impact	Rate of Burning	Explosive Power	Sensitivity to Static Discharge
Not applicable	**Not applicable**	**Not applicable**	**Not applicable**

SECTION V - REACTIVITY DATA

Chemical Stability Yes ☐ No ☑	If no, under which conditions?	**Absorbs moisture and carbon dioxide in the air to form calcium hydroxide and calcium carbonate.**
Incompatibility to other substances Yes ☑ No ☐	If so, which ones?	**Boron tri-fluoride, chlorine tri-fluoride, ethanol, fluorine, hydrogen fluoride, phosphorus pentoxide; water and acids (violent reaction with generating heat and possible explosion in confined area).**
Reactivity Yes ☑ No ☐	If so, under which conditions?	**Reacts violently with strong acids. Reacts with water to form calcium hydroxide. The heat generated when mixed with water or moist air is sufficient enough to ignite surrounding materials such as paper, wood or cloth.**
Hazardous Decomposition Products		**None.**
Hazardous Polymerization Products		**Will not occur.**

SECTION VI - TOXICOLOGICAL PROPERTIES

Route of Entry

☑ Skin Contact ☐ Skin Absorption ☑ Eye Contact ☑ Acute Inhalation ☐ Chronic Inhalation ☑ Ingestion

Effects of Acute Exposure to Product

Skin	**Severe irritation or burning of mucous and skin. Dehydration of tissues.**
Eyes	**Severe eye irritation and burning, intense watering of the eyes, possible lesions, possible blindness when exposed for prolonged period. (Draize >80).**
Inhalation	**If inhaled in form of dust: nose and throat irritation, cough, sneezing, inflammation of breathing passages, ulceration and perforation of nasal septum, bronchitis, possible pneumonia.**
Ingestion	**If ingested, burning and edema of digestive tracts, abundant salivation, difficulties in swallowing and breathing, vomiting blood, drop in blood pressure (indicates perforation of esophagus or stomach).**

Effects of Chronic Exposure to Product:

Contact dermatitis. Following repeated or prolonged contact, this product can cause redness, desquamation and fissures. This product may contain trace amounts of crystalline silica. Excessive inhalation of respirable crystalline silica dust may result in respiratory disease, including silicosis, pneumoconiosis and pulmonary fibrosis.

LD_{50} of Product (Specify Species and Route) **Unavailable**	Irritancy of Product **Severe to moist tissues**	Exposure limits of Product **Unavailable**
LC_{50} of Product (Specify Species) **Unavailable**	Sensitization to Product **None**	Synergistic materials **None reported**

SECTION VI - TOXICOLOGICAL PROPERTIES (Cont'd)

☑ Carcinogenicity ☐ Reproductive effects ☐ Tératogenicity ☐ Mutagenicity

Quicklime is not listed as a carcinogen by ACGIH, MSHA, OSHA, NTP or IARC. It may, however, contain trace amounts of Crystalline Silica listed carcinogens by these organizations.

Crystalline Silica, which inhaled in the form of quartz or crystobalite from occupational sources, is classified by IARC as (Group 1) carcinogenic to humans.

Silica, crystalline (Airborne particles of respirable size) is regulated under California's Safe Drinking Water and Toxic Enforcement Act of 1986. (Proposition 65).

NIOSH considers crystalline silica to be potential occupational carcinogen as defined by the OSHA carcinogen policy [29 CFR 1990].

NTP lists respirable Crystalline Silica as known to be human carcinogens based on sufficient evidence of carcinogenicity in humans.

ACGIH lists respirable Crystalline Silica (quartz) as suspected human carcinogen (A-2).

RSST lists respirable Crystalline Silica (quartz) as suspected human carcinogen.

SECTION VII - PREVENTIVE MEASURES

Personal Protective Equipment (PPE)	**Wear clean, dry gloves, full length pants over boots, long sleeved shirt buttoned at the neck, head protection and approved eye protection selected for the working conditions.**

Gloves (Specify)	Respiratory (Specify)	Eyes (Specify)	Footwear (Specify)
Gauntlets Cuff style	**NIOSH approved (N/R/P95) dust respirator**	**ANSI, CSA or ASTM approved safety glasses with side shields. Tight fitting dust goggles should be worn when excessive (visible) dust conditions are present. Do not wear contact lenses without tight fitting goggles when handling this chemical.**	**Resistant to caustics**

Clothing (Specify)	Other (Specify)
Fully covering skin	**Evaluate degree of exposure and use PPE if necessary. After handling lime, employees must shower. If exposed daily, use oil, Vaseline, silicone base creme etc. to protect exposed skin, particularly neck, face and wrists.**

Engineering Controls (e.g. ventilation, enclosed process, specify)

Enclose dust sources; use exhaust ventilation (dust collector) at handling points, keep levels below Max. Concentration Permitted.

SECTION VII - PREVENTIVE MEASURES (Cont'd)

Leak and Spill Procedure

Limit access to trained personnel. Use industrial vacuums for large spills. Ventilate area.

Waste Disposal

Transport to disposal area or bury. Review Federal, Provincial and local Environmental regulations.

Handling Procedures and Equipment

Avoid skin and eye contact. Minimize dust generation. Wear protective goggles and in cases of insufficient ventilation, use anti-dust mask. An eye wash station and safety shower should be readily available where this material or its water dispersions are used. Contact lenses should not be worn when working with this chemical.

Storage Requirements

Keep tightly closed containers in a cool, dry and well ventilated area, away from acids. Keep out of reach of children.

Special Shipment Information

Quicklime is neither regulated by the Transportation of Dangerous Goods (TDG) Regulations (Canada) nor by the Hazardous Materials Regulations (USA) unless this material is offered or intended for transportation by aircraft.

SECTION VIII - FIRST AID MEASURES

Skin

Carefully and gently brush the contaminated body surfaces in order to remove all traces of lime. Use a brush, cloth or gloves. Remove all lime-contaminated clothing. Rinse contaminated area with lukewarm water for 15 to 20 minutes. Consult a physician if exposed area is large or if irritation persists.

Eyes

Immediately rinse contaminated eye(s) with gently running lukewarm water (saline solution is preferred) for 15 to 20 minutes. In the case of an embedded particle in the eye, or chemical burn, as assessed by first aid trained personnel, contact a physician.

Inhalation

Move source of dust or move victim to fresh air. Obtain medical attention immediately. If victim does not breathe, give artificial respiration.

Ingestion

If victim is conscious, give 300 ml (10 oz) of water, followed by diluted vinegar (1 part vinegar, 2 parts water) or fruit juice to neutralize the alkali. Do not induce vomiting. Contact a physician immediately.

General Advise

Consult a physician for all exposures except minor instances of inhalation.

SECTION IX - REGULATORY INFORMATION

Superfund Amendments and Reauthorization Act of 1986 (**SARA Title III**). / The Emergency Planning and "Community Right-to-Know" Act (**EPCRA**). / Comprehensive Environmental Response, Compensation and Liability Act (**CERCLA**). / Resource Conservation and Recovery Act (**RCRA**).

Component Calcium Oxide has been reviewed against the following regulatory listings:

- **SARA Section 302 – Emergency Planning Notification. Extremely Hazardous Substances (EHS) List and Threshold Planning Quantity (TPQ). (40 CFR, Part 355, Section 30): Not listed.**
- **SARA Section 304 – Emergency Release Notification. Extremely Hazardous Substances (EHS) and Reportable Quantity (RQ) List. (40 CFR, Part 355, Section 40): Not listed.**
- **SARA Section 311/312 – Hazard Categories (40 CFR, Part 370): This product is regulated under CFR 1910.1200 (OSHA Hazard Communication) as Immediate (Acute) Health Hazards – Irritant.**
- **SARA Section 313 – Toxics Release Inventory (TRI). Toxic Chemical List (40 CFR, Part 372). Not listed.**
- **CERCLA – Hazardous Substance (40 CFR, Part 302): Not listed in Table 302.4.**
- **RCRA – Hazardous Waste Number (40 CFR, Part 261, Subpart D): Not listed.**
- **RCRA – Hazardous Waste Classification (40 CFR, Part 261, Subpart C): Not classified.**

CWA 311. - Clean Water Act List of Hazardous Substances.

Calcium Oxide has been withdrawn from the Clean Water Act (CWA) list of hazardous substances. (11/13/79) (44FR65400)

California Proposition 65.

Component Calcium Oxide does not appear on the above regulatory listing. This product may contain small amounts of crystalline silica. Silica, crystalline (Airborne particles of respirable size) is regulated under California's Safe Drinking Water and Toxic Enforcement Act of 1986. (Proposition 65)

Transportation - Hazardous Materials Regulations (USA) & Transportation of Dangerous Goods (TDG) Regulations (Can).

Calcium Oxide is listed in both table 172.101 of Title 49 CFR 172 and in schedule 18 D.G. List (Chapter 34 TDG ACT, SOR/DORS 93-525). Application of requirements is restricted to material offered or intended for transportation by aircraft. - Calcium oxide. By aircraft only. Class 8 - Corrosives. PIN UN1910. Packing group III. Maximum net quantity per package - passenger vehicles, 25kg.

Toxic Substances Control Act (TSCA).

All naturally occurring components of this product are automatically included in the USEPA TSCA Inventory List per 40 CFR 710.4 (b). All other components are one the USEPA TSCA Inventory List. Calcium Oxide is exempt from reporting under the Inventory update rule.

Canadian Environmental Protection Act 1999 (CEPA) – Substances Lists (DSL/NDSL).

Calcium Oxide appears on the Domestic Substances List (DSL).

ANSI/NSF 60 - Drinking Water Treatment Additives.

Quicklime has been investigated with respect to elements identified by EPA as toxic and it has been classified for use in direct contact with drinking water. (In accordance with Standard ANSI/NSF 60). For a list of classified products, refer to Underwriters Laboratories Inc.'s Online Certifications Directory.

FDA - U.S. Food and Drug Administration, Department of Health and Human Services.

Calcium Oxide has been determined as "Generally Recognized As Safe" (GRAS) by FDA. See 21CFR184.1210. (CFR Title 21 Part 184 - - Direct food substances affirmed as generally recognized as safe).

SECTION X - OTHER INFORMATION

Hazardous Materials Identification System (U.S.)		National Fire Protection Association (U.S.) 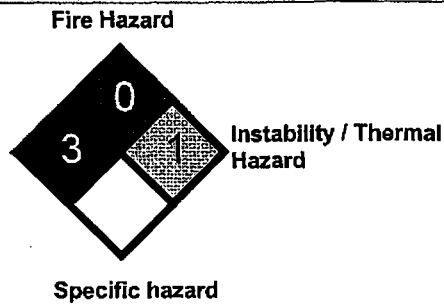

WHMIS – Classification: **"E" Corrosive Material.**	WHMIS – Classification: **"D2A and D2B": Materials causing other toxic effects.**
Symbol:	Symbol:

Additional Information/Comments:

The technical data contained herein is given as information only and is believed to be reliable. *GRAYMONT* makes no guarantee of results and assumes no obligation or liability in connection therewith.

Sources Used:

NFPA, NLA, TDG, CSST, RSST, (LSRO-FASEB), Hazardous Products Act, Environment Canada, Enviroguide, OSHA, ACGIH, IARC, NIOSH, CFR, NTP, HSDB, EPA SRS, Chemistry and Technology of Lime and Limestone (John Wiley and Sons, Inc.), Lime and Limestone (WILEY-VCH).

SECTION XI - PREPARATION INFORMATION

Prepared by:	Telephone number:	Date :
GRAYMONT (QC) INC. **Technical Services**	**(450) 449-2262**	**September 2006**

An electronic version of this MSDS is available at: www.graymont.com under the PRODUCTS section.

GRAYMONT

MATERIAL SAFETY DATA SHEET

SECTION I - CHEMICAL PRODUCT AND COMPANY INFORMATION

Product Name: **HIGH CALCIUM HYDRATED LIME**	**WHMIS – CLASSIFICATION: D2A / D2B: MATERIALS CAUSING OTHER TOXIC EFFECTS E: CORROSIVE MATERIAL**

MANUFACTURER'S AND SUPPLIER'S NAME:

GRAYMONT (NB) INC	4634, Route 880, Havelock, New Brunswick, E4Z 5K8.
GRAYMONT (QC) INC.	25, rue De Lauzon, Boucherville (Québec), J4B 1E7.
GRAYMONT (PA) INC.	965, East College avenue, Pleasant Gap, PA 16823
GRAYMONT (WESTERN CANADA) INC.	190 – 3025, 12 Street N.E., Calgary, Alberta, T2E 7J2
GRAYMONT (WESTERN US) INC.	3950 South, 700 East, Suite 301, Salt Lake City, Utah 84107

EMERGENCY TEL. No.: (613) 996 – 6666 CANUTEC (Canada) (800) 424 – 9300 CHEMTREC (US)

Chemical Name	Chemical Family	Chemical Formula
Calcium hydroxide	***Alkaline earth hydroxide***	***Complex mixture - mostly $Ca(OH)_2$***
Molecular Weight	**Trade Name and Synonyms**	**Material Use**
$Ca(OH)_2$ = 74.096	***Hydrated Lime, Lime, Slaked lime, Lime Putty, Lime Slurry, Milk of Lime, Calcium Hydroxide***	***Neutralization, Flocculation, Stabilization, absorption***

SECTION II - COMPOSITION AND INFORMATION ON INGREDIENTS

Hazardous Ingredients	Approximate Concentration (% by weight)	C.A.S. Number	Exposure limits (mg/m^3)					
			OSHA PEL	ACGIH TLV	RSST VEMP	MSHA PEL (Note 2)	NIOSH REL	NIOSH IDLH
(Complex Mixture)	**(% by weight)**		**(TWA) 8/40h**	**(TWA) 8/40h**	**(TWA) 8/40h**	**(TWA) 8/40h**	**(TWA) 10/40h**	
Calcium hydroxide	**92 to 100**	**1305-62-0**	**15 (tot dust) 5 resp dust**	**5**	**5**	**5**	**5**	**N/A**
Crystalline Silica, Quartz	**0.1 to 1**	**14808-60-7**	**$10/(\%SiO_2)+2$ respirable silica dust**	**0.025 respirable silica dust**	**0.1 respirable silica dust**	**$10/(\%SiO_2)+2$ respirable silica dust**	**0.05 respirable free silica**	**50**
Crystalline Silica, Quartz	**0 to 0.1 (Note 1)**	**14808-60-7**	**10/(%SIO2)+2 respirable silica dust**	**0.025 respirable silica dust**	**0.1 respirable silica dust**	**10/(%SIO2)+2 (respirable silica dust)**	**0.05 respirable free silica**	**50**

(Note 1): Concentration of crystalline silica in a series of lime products will vary from source to source. It was not detected on some samples (< 0.1% w/w). Therefore two ranges are being disclosed. **(Note 2)**: ACGIH TLV Version 1973 has been adopted by the Mine Safety Health Administration (MSHA) as the regulatory Exposure Standard.

SECTION III - PHYSICAL AND CHEMICAL DATA

Physical State	Odor and Appearance		Odor Threshold (p.p.m.)	Specific Gravity
Gas ☐ Liquid ☐ Solid ☑	**Slight earthy odor – Fine white powder**		**Not applicable**	**2.3 – 2.4**
Vapor Pressure (mm)	Vapor Density (Air = 1)	Evaporation Rate	Boiling Point (°C)	Melting Point (°C)
Not applicable	**Not applicable**	**Not applicable**	**Not applicable**	**Not applicable**
Solubility in Water (20°C)	Volatiles (% by volume)	pH (25 °C)	Bulk Density (kg/m^3)	Coefficient of water/oil distribution
0.165g/100g Sat.soln	**Not applicable**	**Sat. soln $Ca(OH)_2$ 12.45**	**320 - 690**	**Not applicable**

SECTION IV - FIRE OR EXPLOSION HAZARD DATA

Flammability

Yes ☐ No ☑ If yes, under which conditions?

Extinguishing Media

Calcium Hydroxide does not burn. Use extinguishing media appropriate to surrounding fire conditions.

Special Fire Fighting Procedures

Not applicable

Flash point (°C) and Method	Upper flammable limit (% by volume)	Lower flammable limit (% by volume)
Not applicable	**Not applicable**	**Not applicable**
Auto Ignition Temperature (°C)	TDG Flammability Classification	Hazardous Combustion Products
Not applicable	**Non-flammable**	**None**

Dangerous Combustion Products **None**

EXPLOSION DATA

Sensitivity to Chemical Impact	Rate of Burning	Explosive Power	Sensitivity to Static Discharge
Not applicable	**Not applicable**	**Not applicable**	**Not applicable**

SECTION V - REACTIVITY DATA

Chemical Stability		
Yes ☐ No ☑	If no, under which conditions?	**Absorbs carbon dioxide in the air to form calcium carbonate.**
Incompatibility to other substances		
Yes ☑ No ☐	If so, which ones?	**Boron tri-fluoride, chlorine tri-fluoride, ethanol, fluorine, hydrogen fluoride, phosphorus pentoxide; and acids (violent reaction with generating heat and possible explosion in confined area).**
Reactivity		
Yes ☑ No ☐	If so, under which conditions?	**Reacts violently with strong acids. Reacts chemically with acids and many other compounds and chemical elements to form calcium based compounds. Explosive when mixed with nitro organic compounds.**
Hazardous Decomposition Products		**Thermal decomposition at 540°C will produce calcium oxide and water.**
Hazardous Polymerization Products		**Will not occur.**

SECTION VI - TOXICOLOGICAL PROPERTIES

Route of Entry

☑ Skin Contact ☐ Skin Absorption ☑ Eye Contact ☑ Acute Inhalation ☐ Chronic Inhalation ☑ Ingestion

Effects of Acute Exposure to Product

Skin	**Severe irritation of mucous and skin, removes natural skin oils.**
Eyes	**Severe eye irritation, intense watering of the eyes, possible lesions, possible blindness when exposed for prolonged period. Eye-Rabbit-10mg/ 24 h – Severe.**
Inhalation	**If inhaled in form of dust, irritation of breathing passages, cough, sneezing.**
Ingestion	**If ingested: pain, vomiting blood, diarrhea, collapse, drop in blood pressure (indicates perforation of esophagus or stomach).**

Effects of Chronic Exposure to Product:

Contact dermatitis. Following repeated or prolonged contact, this product can cause redness, desquamation and fissures. This product may contain trace amounts of crystalline silica. Excessive inhalation of respirable crystalline silica dust may result in respiratory disease, including silicosis, pneumoconiosis and pulmonary fibrosis.

LD_{50} of Product (Specify Species and Route)	Irritancy of Product	Exposure limits of Product
(Food grade $Ca(OH)_2$: 7340mg/kg) (Rats, ingestion)	**Severe to moist tissues**	**Unavailable**
LC_{50} of Product (Specify Species)	Sensitization to Product	Synergistic materials
Unavailable	**None**	**None reported**

SECTION VI - TOXICOLOGICAL PROPERTIES (Cont'd)

☑ Carcinogenicity ☐ Reproductive effects ☐ Tératogenicity ☐ Mutagenicity

Calcium Hydroxide is not listed as a carcinogen by ACGIH, MSHA, OSHA, NTP or IARC. It may, however, contain trace amounts of Crystalline Silica listed carcinogens by these organizations.

Crystalline Silica, which inhaled in the form of quartz or crystobalite from occupational sources, is classified by IARC as (Group 1) carcinogenic to humans.

Silica, crystalline (Airborne particles of respirable size) is regulated under California's Safe Drinking Water and Toxic Enforcement Act of 1986. (Proposition 65).

NIOSH considers crystalline silica to be potential occupational carcinogen as defined by the OSHA carcinogen policy [29 CFR 1990].

NTP lists respirable Crystalline Silica as known to be human carcinogens based on sufficient evidence of carcinogenicity in humans.

ACGIH lists respirable Crystalline Silica (quartz) as suspected human carcinogen (A-2).

RSST lists respirable Crystalline Silica (quartz) as suspected human carcinogen.

SECTION VII - PREVENTIVE MEASURES

Personal Protective Equipment (PPE) **Wear clean, dry gloves, full length pants over boots, long sleeved shirt buttoned at the neck, head protection and approved eye protection selected for the working conditions.**

Gloves (Specify)	Respiratory (Specify)	Eyes (Specify)	Footwear (Specify)
Gauntlets Cuff style	**NIOSH approved (N/R/P95) dust respirator**	**ANSI, CSA or ASTM approved safety glasses with side shields. Tight fitting dust goggles should be worn when excessive (visible) dust conditions are present. Do not wear contact lenses without tight fitting goggles when handling this chemical.**	**Resistant to caustics**

Clothing (Specify)	Other (Specify)
Fully covering skin	**Evaluate degree of exposure and use PPE if necessary. After handling lime, employees must shower. If exposed daily, use oil, Vaseline, silicone base creme etc. to protect exposed skin, particularly neck, face and wrists.**

Engineering Controls (e.g. ventilation, enclosed process, specify)

Enclose dust sources; use exhaust ventilation (dust collector) at handling points, keep levels below Max. Concentration Permitted.

SECTION VII - PREVENTIVE MEASURES (Cont'd)

Leak and Spill Procedure

Limit access to trained personnel. Use industrial vacuums for large spills. Ventilate area.

Waste Disposal

Transport to disposal area or bury. Review Federal, Provincial and local Environmental regulations.

Handling Procedures and Equipment

Avoid skin and eye contact. Minimize dust generation. Wear protective goggles and in cases of insufficient ventilation, use anti-dust mask. An eye wash station and safety shower should be readily available where this material or its water dispersions are used. Contact lenses should not be worn when working with this chemical.

Storage Requirements

Keep tightly closed containers in a cool, dry and well-ventilated area, away from acids. Keep out of reach of children.

Special Shipment Information

Calcium Hydroxide is neither regulated by the Transportation of Dangerous Goods (TDG) Regulations (Canada) nor by the Hazardous Materials Regulations (USA).

SECTION VIII - FIRST AID MEASURES

Skin

Carefully and gently brush the contaminated body surfaces in order to remove all traces of lime. Use a brush, cloth or gloves. Remove all lime-contaminated clothing. Rinse contaminated area with lukewarm water for 15 to 20 minutes. Consult a physician if exposed area is large or if irritation persists.

Eyes

Immediately rinse contaminated eye(s) with gently running lukewarm water (saline solution is preferred) for 15 to 20 minutes. In the case of an embedded particle in the eye, or chemical burn, as assessed by first aid trained personnel, contact a physician.

Inhalation

Move source of dust or move victim to fresh air. Obtain medical attention immediately. If victim does not breathe, give artificial respiration.

Ingestion

If victim is conscious, give 300 ml (10 oz) of water, followed by diluted vinegar (1 part vinegar, 2 parts water) or fruit juice to neutralize the alkali. Do not induce vomiting. Contact a physician immediately.

General Advise

Consult a physician for all exposures except minor instances of inhalation.

SECTION IX - REGULATORY INFORMATION

Superfund Amendments and Reauthorization Act of 1986 (SARA Title III). / The Emergency Planning and "Community Right-to-Know" Act (EPCRA). / Comprehensive Environmental Response, Compensation and Liability Act (CERCLA). / Resource Conservation and Recovery Act (**RCRA**).

Component Calcium Hydroxide has been reviewed against the following regulatory listings:

- **SARA Section 302 – Emergency Planning Notification. Extremely Hazardous Substances (EHS) List and Threshold Planning Quantity (TPQ). (40 CFR, Part 355, Section 30) : Not listed.**
- **SARA Section 304 – Emergency Release Notification. Extremely Hazardous Substances (EHS) and Reportable Quantity (RQ) List. (40 CFR, Part 355, Section 40) : Not listed.**
- **SARA Section 311/312 – Hazard Categories (40 CFR, Part 370) : This product is regulated under CFR 1910.1200 (OSHA Hazard Communication) as Immediate (Acute) Health Hazards – Irritant.**
- **SARA Section 313 – Toxics Release Inventory (TRI). Toxic Chemical List (40 CFR, Part 372). Not listed.**
- **CERCLA – Hazardous Substance (40 CFR, Part 302): Not listed in Table 302.4.**
- **RCRA – Hazardous Waste Number (40 CFR, Part 261, Subpart D): Not listed.**
- **RCRA – Hazardous Waste Classification (40 CFR, Part 261, Subpart C): Not classified.**

CWA 311. - Clean Water Act List of Hazardous Substances.

Calcium Hydroxide has been withdrawn from the Clean Water Act (CWA) list of hazardous substances. (11/13/79) (44FR65400)

California Proposition 65.

Component Calcium Hydroxide does not appear on the above regulatory listing. This product may contain small amounts of crystalline silica. Silica, crystalline (Airborne particles of respirable size) is regulated under California's Safe Drinking Water and Toxic Enforcement Act of 1986. (Proposition 65)

Transportation - Hazardous Materials Regulations (USA) & Transportation of Dangerous Goods (TDG) Regulations (Can).

Calcium Hydroxide does not appear on the above regulatory listings

Toxic Substances Control Act (TSCA).

All naturally occurring components of this product are automatically included in the USEPA TSCA Inventory List per 40 CFR 710.4 (b). All other components are one the USEPA TSCA Inventory List. Calcium Hydroxide is exempt from reporting under the inventory update rule.

Canadian Environmental Protection Act (CEPA) – Substances Lists (DSL/NDSL).

Calcium Hydroxide appears on the Domestic Substances List (DSL).

ANSI/NSF 60 - Drinking Water Treatment Additives.

Hydrated Lime has been investigated with respect to elements identified by EPA as toxic and it has been classified for use in direct contact with drinking water. (in accordance with Standard ANSI/NSF 60). For a list of classified products, refer to Underwriters Laboratories Inc.'s Online Certifications Directory.

FDA - U.S. Food and Drug Administration, Department of Health and Human Services.

Calcium Hydroxide has been determined as "Generally Recognized As Safe" (GRAS) by FDA. See 21CFR184.1205. (CFR Title 21 Part 184 - - Direct food substances affirmed as generally recognized as safe).

SECTION X - OTHER INFORMATION

Hazardous Materials Identification System (U.S.)

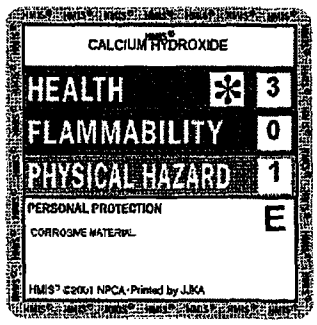

National Fire Protection Association (U.S.)

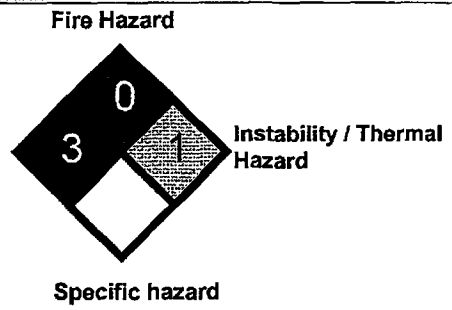

WHMIS – Classification:	WHMIS – Classification:
"E" Corrosive Materials.	**"D2A" and "D2B" Materials causing other toxic effects.**
Symbol:	Symbol:

Additional Information/Comments:

The technical data contained herein is given as information only and is believed to be reliable. GRAYMONT makes no guarantee of results and assumes no obligation or liability in connection therewith.

Sources Used:

NFPA, NLA, TDG, CSST, RSST, (LSRO-FASEB), Hazardous Products Act, Environment Canada, Enviroguide, OSHA, ACGIH, IARC, NIOSH, CFR, NTP, HSDB, EPA SRS, Chemistry and Technology of Lime and Limestone (John Wiley and Sons, Inc.), Lime and Limestone (WILEY-VCH).

SECTION XI - PREPARATION INFORMATION

Prepared by:	Telephone number:	Date :
GRAYMONT (QC) INC. **Technical Services**	**(450) 449-2262**	**September 2006**

An electronic version of this MSDS is available at: www.graymont.com under the PRODUCTS section.

SECTION 6

Fees

Indian River Operations Inc.
P.O. Box 408
Power Plant Road
Millsboro, Delaware 19966

An NRG Energy Company

April 16, 2009

Mr. Paul Foster
Program Manager
Air Quality Management Section
Department of Natural Resources and Environmental Control
Division of Air & Waste Management
156 South State Street
Dover, DE 19901

Re: Indian River Units 3 and 4
Regulation 1102 Permit Application

Dear Mr. Foster:

The purpose of this correspondence is to submit to the Department of Natural Resources and Environmental Control ("DNREC" or "the Department") Permit Application Fees associated with the submittal of our Regulation 1102 Permit Application for installation of pollution control devices on the Indian River Generating Station ("Indian River") Units 3 and 4, filed April 16, 2009.

As defined in Application and in accordance with the Air Quality Management Construction Permit Fee Calculator are checks in the amount of $1,485.00 for permit fees and $1,815.00 for advertising fees.

Indian River is pleased to present this permit application to the Department. Please contact me at (302) 540-0327 if you have any questions about the information submitted in the application.

Sincerely,

David Bacher
Regional Manager, NRG Energy, Inc.

cc:	J. French	(DNREC)
	T. Lilly	(DNREC)
	J. Robertson	(Indian River, NRG)
	F. Sullivan	(NRG)

NRG Energy, Inc

Vendor NAME: **STATE OF DELAWARE** CHECK DATE: **April 14, 2009** CHECK NO: **71485** VENDOR KEY: **117956**

VOUCHER NO.	INVOICE DATE	INVOICE NO.	INVOICE REMARK	GROSS AMOUNT	NET AMOUNT
745540	4/9/09	09-INV-0409		1,855.00	1,855.00
			TOTALS	$1,855.00	$1,855.00

Please Detach Before Presenting for Payment

NRG

NRG Energy, Inc
211 Carnegie Center
Princeton NJ 08540-6213

Bank of America, N.A.
Atlanta, Dekalb County, Georgia

71485

April 14, 2009

VOID AFTER 90 DAYS

AMOUNT
$1,855.00

PAY One thousand eight hundred fifty five and 00/100 Dollars

To The Order
STATE OF DELAWARE 117956
EPCRA PROGRAM
156 SOUTH STATE STREET
DOVER, DE 19901

⑈0007148 5⑈ ⑆061112788⑆ 3299044315⑈

NRG Energy, Inc

Vendor NAME: STATE OF DELAWARE | CHECK DATE: April 14, 2009 | CHECK NO: 71486 | VENDOR KEY: 117956

VOUCHER NO.	INVOICE DATE	INVOICE NO.	INVOICE REMARK	GROSS AMOUNT	NET AMOUNT
745541	4/9/09	09-INV-0409A		1,485.00	1,485.00
			TOTALS	$1,485.00	$1,485.00

Please Detach Before Presenting for Payment

NRG

NRG Energy, Inc
211 Carnegie Center
Princeton NJ 08540-6213

Bank of America, N.A.
Atlanta, Dekalb County, Georgia

64-1278
611 GA

71486

April 14, 2009

VOID AFTER 90 DAYS

AMOUNT
*******$1,485.00

PAY One thousand four hundred eighty five and 00/100 Dollars

To The Order
STATE OF DELAWARE 117956
EPCRA PROGRAM
156 SOUTH STATE STREET
DOVER, DE 19901

⑈00071486⑈ ⑆061112788⑆ 3299014315⑈