APPENDIX V-D

DRPI LFG ODOR CONTROL SYSTEM

STATE OF DELAWARE
DEPARTMENT OF NATURAL RESOURCES
& ENVIRONMENTAL CONTROL
DIVISION OF AIR QUALITY
STATE STREET COMMONS
100 W. Water Street, Suite 6A
DOVER, DELAWARE 19904

Telephone: (302) 739 - 9402
Fax No.: (302) 739 - 3106

August 31, 2018

Delaware Recyclable Products, Inc. (DRPI)
246 Marsh Lane
New Castle, Delaware 19804

ATTENTION: Richard Klonowski
District Manager

SUBJECT: **"Final" Permit: APC-1995/0372-OPERATION (Amendment 6)(SM)**
"Final" Permit: APC-2018/0075-CONSTRUCTION (MNSR)(FE)

Dear Mr. Klonowski:

The Department has completed processing DRPI'S request for a Synthetic Minor Permit amendment and federally enforceable Construction Permit per applications submitted on February 7, 2018 with additional technical information provided on May 18, 2018. The permits authorize DRPI to increase the throughput of the existing flare F01 and to begin construction of the new flare F02. Once the new flare is installed and commissioned but prior to full standard operation, contact Joe Koetas at the number below to schedule a C/O inspection.

In an email dated July 25, 2018 from Brian Bolvin, Site Engineer, the Department received comments from DRPI regarding the draft permits. The Department's responses are shown in the table below.

COMMENT REFERENCE	COMMENT SUMMARY	DEPARTMENT RESPONSE
Condition 3.5.4	This condition requires the flare's low temperature shutdown to be no lower than 300° F. The Company requests to reduce this shutdown temperature to 150° F or to the actual presence of a flame.	The 300° F limit was taken from the Company's initial permit application and is well documented in the manufacturer's specifications. Since this is a control device operating limit it would need a new permit application, evaluation and advertising prior to amending the permit. The modification cannot be made at this time.
Condition 3.5.5	This condition requires that landfill gas flow be monitored and recorded when the flare is in operation. It does not give a required frequency of measurement. The Company's data loggers are set for 15 minute logging intervals, and they propose the following wording: "When flare is in operation, gas flow shall be monitored and recorded at a minimum every 15 minutes."	This request is accepted and will be entered into the permit with some minor clarification.

COMMENT REFERENCE	COMMENT SUMMARY	DEPARTMENT RESPONSE
Condition 4.3	This condition requires that when the flare is in operation, a flow meter shall be used to continuously monitor and record gas flow rate to this unit. The Company makes the same request as in Condition 3.5.5 above.	This request is accepted and will be entered into the permit with some minor clarification.
Section 5.2.5	This condition requires that the net stack temperature be recorded when the flare is in operation. Since the Company's data loggers are set for 15 minute logging intervals, the Company makes the same request as in Condition 4.3 above.	This request is accepted and will be entered into the permit with some minor clarification.

Please contact Joe Koetas at (302) 323-4542 if you have any questions or comments regarding the attached permit.

Sincerely,

Angela Marconi, P.E., BCEE
Program Manager
Engineering & Compliance Branch

ADM:KAM:JPK
F:\EngAndCompliance\JPK\jpk18046.doc

pc: Dover File

STATE OF DELAWARE
DEPARTMENT OF NATURAL RESOURCES
& ENVIRONMENTAL CONTROL
DIVISION OF AIR QUALITY
STATE STREET COMMONS
100 W. Water Street, Suite 6A
DOVER, DELAWARE 19904

Telephone: (302) 739 - 9402
Fax No.: (302) 739 - 3106

August 31, 2018

Permit: APC-1995/0372-OPERATION (Amendment 6)(SM)

Delaware Recyclable Products, Inc.
Increased Flare Flow Rate for Landfill Gas Extraction System
246 Marsh Lane
New Castle, Delaware 19804

ATTENTION: Richard Klonowski
District Manager

Dear Mr. Klonowski:

Pursuant to 7 **DE Admin. Code** 1102, Section 2, approval of the Department of Natural Resources and Environmental Control is hereby granted for the operation of a Landfill Gas Extraction System with a 33.1 MMBTU/hr candlestick type combustion flare at the Delaware Recyclable Products, Inc. (DRPI) dry waste landfill in New Castle, Delaware, in accordance with the application on the AQM-2 and 4 forms requesting a synthetic minor permit dated November 5,1998, signed by Matthew P. Williams, Facility Manager, the application to revise the operating permit and Synthetic Minor Permit and Certification letter dated January 28,1999, also signed by Matthew P. Williams, Facility Manager, the information received through construction permit application dated March 1, 2010 for Cell #6 and miscellaneous modification of landfill gas collection system, additional information received from the company via an email on May 26, 2010 and application submitted on Form Nos. AQM-1, AQM-2, AQM-4.3 and AQM-5 dated February 7, 2018 signed by Christian Salamone, District Manager, requesting an increase in Flare-01 flow capacity from 1100 scfm to 1200 scfm of landfill gas.

This permit is issued subject to the following conditions all of which are federally enforceable except Condition 2.2 and 6.1.

1. General Provisions

1.1 DRPI agrees that all limits, restrictions and requirements in this permit are necessary to limit their potential to emit below major source thresholds. Violation of any limit, restriction or requirement contained herein may be grounds for suspension or revocation of the permit or other enforcement action for noncompliance with the permit, the failure to apply for a Title V permit, or the failure to obtain a Title V permit.

1.2 Representatives of the Department may, at any reasonable time, inspect this facility.

1.3 This permit may not be transferred to another location or to another piece of equipment or process.

1.4 This permit may not be transferred to another person, owner, or operator unless the transfer has been approved in advance by the Department. Approval (or disapproval) of the permit transfer will be provided by the Department in writing. A request for a permit transfer shall be received by the Department at least thirty (30) days before the date of the requested permit transfer. This request shall include:

1.4.1 Signed letters from each person stating the permit transfer is agreeable to each person.

1.4.2 An Applicant Background Information Questionnaire pursuant to 7 Del C, Chapter 79 if the person receiving the permit has not been issued any permits by the Department in the previous five (5) years.

1.5 The owner or operator shall not initiate construction, install, or alter any equipment or facility or air contaminant control device which will emit or prevent the emission of an air contaminant prior to submitting an application to the Department pursuant to 7 **DE Admin. Code** 1102, and, when applicable 7 **DE Admin. Code** 1125, and receiving approval of such application from the Department; except as exempted in 7 **DE Admin. Code** 1102 Section 2.2.

2. Emission Limitations

2.1 Air contaminant emission levels from the flare shall not exceed those specified in 7 **DE Admin. Code** 1100 and the following:

2.1.1 Carbon Monoxide (CO) Emissions
CO emissions shall not exceed 12.25 pounds per hour and 55.1 tons per twelve (12) month rolling period;

2.1.2 Nitrogen Oxide (NO_X) Emissions
NO_X emissions shall not exceed 2.25 pounds per hour and 10.12 tons per twelve (12) month rolling period;

2.1.3 Non-Methane Organic Compound (NMOC) Emissions
NMOC emissions shall not exceed 0.19 pound per hour and 0.83 ton per twelve (12) month rolling period;

2.1.4 Volatile Organic Compound (VOC) Emissions
VOC emissions shall not exceed 0.08 pound per hour and 0.35 ton per twelve (12) month rolling period;

2.1.5 Sulfur Oxide (SO_X) Emissions
SO_X emissions shall not exceed 9.91 pounds per hour and 87.0 tons per twelve (12) month rolling period;

2.1.6 Particulate Matter (PM) Emissions
PM emissions shall not exceed 0.49 pound per hour and 2.1 tons per twelve (12) month rolling period;

2.1.7 Hazardous Air Pollutant (HAP) Emissions
HAP emissions shall not exceed 0.04 pound per hour and 0.18 ton per rolling twelve (12) month period.

2.2 Odors from this source shall not be detectable beyond the plant property line in sufficient quantities such as to cause a condition of air pollution.

2.3 The emission of visible air contaminants from this facility shall not exceed:

2.3.1 For the flare, zero (0) opacity, except for periods not to exceed five (5) minutes during any consecutive two (2) hour period, as stated in 40 CFR Method 22.

2.3.2 For the facility, emission of visible air contaminants shall not exceed twenty percent (20%) opacity for an aggregate of more than three (3) minutes in anyone (1) hour period, or more fifteen (15) minutes in any twenty-four (24) hour period.

3. Operational Limitations

3.1 The owner or operator shall comply with the following operational limits:

3.1.1 The landfill gas flow rate to the flare shall not exceed 1,200 scfm on one-hour rolling average.

3.1.2 The landfill gas collection system shall be operated such that all collected gases at the blower/fan are vented to the open flare. In the event the collection system or open flare is inoperable, the following action shall be taken:

3.1.2.1 The system blowers shall be shut down.

3.1.2.2 The main header valve shall automatically close and stop the flow of gas to the flare.

3.2 If emissions of SO_x exceed 80 tons per rolling twelve month period, the facility shall notify the Department within fifteen (15) calendar days from the monthly emissions calculation and perform an analysis of hydrogen sulfide/sulfur oxide emission control technologies. The analysis must include the environmental technologies and technological feasibility. If control technologies are determined to be feasible then the facility must propose a schedule within one hundred twenty (120) days from the date of notification. The proposed schedule is subject to Department approval for permitting and implementation.

3.3 At all times, including periods of startup, shutdown, and malfunction, the owner or operator shall, to the extent practicable, maintain and operate the facility including associated air pollution control equipment in a manner consistent with good air pollution control practice for minimizing emissions. Determination of whether acceptable operating procedures are being used will be based on information available to the Department which

may include, but is not limited to, monitoring results, opacity observations, review of operating and maintenance procedures, and inspection of the source.

3.4 All structural and mechanical components of the equipment or process covered by this permit shall be maintained in proper operating condition

3.5 The flare shall be equipped with a temperature indicator and recorder to measure and record the gas temperature in the flare stack and a flow monitor to indicate the flow of the landfill gas. The following shall be maintained:

3.5.1 The temperature indicator and recorder shall be operational when the flare is in operation.

3.5.2 The flare shall be operated with a flame present at all times.

3.5.3 The presence of a flare pilot flame shall be monitored using a thermocouple or any other equivalent device to detect the presence of a flame.

3.5.4 The flare temperature control shall automatically shut down the flare if the stack temperature drops below 300 degrees Fahrenheit.

3.5.5 When the flare is in operation, gas flow shall be monitored and recorded at least once every 15 minutes.

3.5.6 The flare shall be operated at all times when the collected gas is routed to the device. In the event the flare is inoperable the gas mover system will shut down and all valves in the collection and control system contributing to venting of the gas to the atmosphere shall be closed within one hour.

3.5.7 The temperature indicator and flow monitor shall be calibrated per manufacturer's requirements.

3.6 The flare shall be equipped with a flame arrester to prevent flashback to the landfill.

3.7 The flare shall have a NMOC destruction efficiency of at least 98%.

3.8 The owner or operator shall not cause or allow land clearing, land grading (including grading for roads), excavation, or the use of non-paved roads on private property unless methods, such as the application of water or the use of other techniques approved by the Department, are employed to control dust emissions when the Department determines that such activities could emit dust in quantities sufficient to cause air pollution.

3.9 The owner or operator shall not cause or allow stockpiling or other storage of material or transport to or from a storage facility in such a manner as may cause a condition of air pollution. The owner or operator shall not cause or allow visible particulate emissions of any material being transported by a motor vehicle.

4. Testing and Monitoring Requirement

4.1 The Department reserves the right to require that the owner or operator perform emission tests using methods approved in advance by the Department.

4.2 The landfill gas shall be analyzed for hydrogen sulfide concentrations at least once a month using Department approved methods.

4.3 When the flare is in operation, a flow meter shall be used to continuously monitor and record gas flow rate to this unit at least once every 15 minutes.

4.4 Conduct an odor survey once a week around the perimeter of the landfill.

4.5 In response to substantiated odor complaints, quantitative measuring of hydrogen sulfide shall be conducted around the perimeter of the landfill as soon as possible. If odor is detected beyond the perimeter of the landfill, the company shall take immediate actions to remediate the problem.

4.6 During daylight hours when the flare is in operation, the owner or operator shall conduct daily qualitative visible emissions observations (similar to Method 22) of the flare to evaluate the presence or absence of smoke and/or visible air contaminants during a continuous five (5) minute period while the flare is operating. If visible emissions are detected, the owner and/or operator shall take all means necessary to minimize emissions and to operate the flare without visible emissions. The term "all means necessary" may include, but is not limited to shutting down the flare.

5. Record Keeping Requirements

5.1 The owner or operator shall maintain all records necessary for determining compliance with this permit in a readily accessible location for five (5) years and shall make these records available to the Department upon written or verbal request.

5.2 The following information shall be recorded, initialed and maintained in a log:

5.2.1 Odor survey results as per Condition 4.4. This shall include at a minimum the presence or absence of odor, wind direction, and the ambient air temperature during the survey.

5.2.2 Visible emission monitoring results as outlined by Condition 4.6.

5.2.3 Daily hours of flare operation.

5.2.4 Reason(s) why the landfill gas collection system and/or flare is (are) inoperable.

5.2.5 The net stack temperature for at least once every 15 minutes when the flare is in operation.

5.2.6 Inspection and maintenance records of flare. Inspection and maintenance shall be performed as recommended by the manufacturer.

5.2.7 The quantity of auxiliary fuel (propane) used (monthly).

5.2.8 Daily and rolling twelve (12) month total gas flow (scfm) to the flare.

5.2.9 Monthly and rolling twelve month emissions of NO_X, SO_X, CO, NMOCs, VOCs, PM and HAPs. Emissions shall be calculated based on the amount of landfill gas combusted and the following emission factors: For NO_X and CO, emissions shall be calculated using the manufacturer's guarantees. NMOC, VOC, PM and HAP emissions shall be calculated based on AP-42 Section 2.4. (Municipal Solid Waste Landfills) as applicable. Sulfur oxides emissions shall be based on hydrogen sulfide sampling results. The emissions calculations shall be completed and recorded by the end of each calendar month for the previous month.

5.2.10 Hydrogen sulfide concentration monitoring results as outlined by Condition 4.2. This shall include the calibration records of hydrogen sulfide monitoring device.

5.2.11 Odor complaints or landfill gas collection system upset.

5.2.12 Daily compliance inspection of the landfill pursuant to Conditions 3.8 and 3.9.

5.2.13 Calibration and maintenance records of the temperature indicator and flow monitor described in Condition 3.5.

5.3 The Company shall maintain a fugitive dust control measures plan. The plan shall address the operating requirements of Conditions 3.8 and 3.9 and a copy of the plan, monitoring results, and corrective actions shall be maintained on site.

6. Reporting Requirements

6.1 Emissions in excess of any permit condition or emissions which create a condition of air pollution shall be reported to the Department immediately upon discovery by calling the Environmental Emergency Notification and Complaint number, (800) 662-8802.

6.2 In addition to complying with condition 6.1 of this permit, any reporting required by 7 **DE Admin. Code** 1203 "**Reporting of Discharge of a Pollutant or an Air Contaminant**", and any other reporting requirements mandated by the State of Delaware, the owner or operator shall for each occurrence of excess emissions, within thirty (30) calendar days of becoming aware of such occurrence, supply the Department in writing with the following information:

6.2.1 The name and location of the facility.

6.2.2 The subject source(s) that caused the excess emissions.

6.2.3 The time and date of the first observation of the excess emissions.

6.2.4 The cause and expected duration of the excess emissions.

6.2.5 For sources subject to numerical emission limitations, the estimated rate of emissions (expressed in the units of the applicable emission limitation) and the operating data and calculations used in determining the magnitude of the excess emissions.

6.2.6 The proposed corrective actions and schedule to correct the conditions causing the excess emissions.

6.3 The Company shall submit a summary report to the Department semi-annually, including the following information:

6.3.1 Statement of compliance or non-compliance with the emission limitations outlined by Condition 2.1 of this permit.

6.3.2 Hydrogen sulfide monitoring results as outlined by Condition 4.2.

6.3.3 Odor survey as per Condition 4.5 and the actions taken to remediate the odor problem.

6.3.4 The semi-annual reports shall be submitted as follow:

Report	Time covered	When to submit
Semi-annual report #1	January-June of each calendar year	By July 31st of each calendar year
Semi-annual report #2	July-December of each calendar year	By January 31st of the current calendar year for the previous calendar year.

6.4 One (1) original and one (1) copy of all required reports shall be sent to the address below:

Division of Air Quality
State Street Commons
100 W. Water Street, Suite 6A
Dover, DE 19904

7. Administrative Conditions

7.1 This permit supersedes **Permit: APC-1995/0372-OPERATION (Amendment 5)(SM)**.

7.2 This permit shall be made available on the premises.

7.3 Failure to comply with the provisions of this permit may be grounds for suspension or revocation.

Sincerely

ADMarconi

Angela D. Marconi, P.E., BCEE
Program Manager
Engineering & Compliance Branch

ADM:KAM:JPK
F:\EngAndCompliance\JPK\jpk18043.doc

pc: Dover File

STATE OF DELAWARE
DEPARTMENT OF NATURAL RESOURCES
& ENVIRONMENTAL CONTROL
DIVISION OF AIR QUALITY
STATE STREET COMMONS
100 W. Water Street, Suite 6A
DOVER, DELAWARE 19904

Telephone: (302) 739 - 9402
Fax No.: (302) 739 - 3106

August 31, 2018

Permit: APC-2018/0075-CONSTRUCTION(MNSR)(FE)

Delaware Recyclable Products, Inc. (DRPI)
New Flare-02 for Landfill Gas Extraction System
246 Marsh Lane
New Castle, Delaware 19804

ATTENTION: Richard Klonowski
District Manager

Dear Mr. Klonowski:

Pursuant to 7 **DE Admin. Code** 1102, Section 2, approval of the Department of Natural Resources and Environmental Control (the Department) is hereby granted for the of construction of one (1) 1,350 scfm LFG Specialties, Inc. Model No. PCF82216 S/N 1510, 37.3 MMBtu/hr landfill gas fired flare located at the DRPI landfill at 246 Marsh Lane, New Castle, Delaware in accordance with the application submitted on Form Nos. AQM-1, AQM-2, AQM-4.3 and AQM-5 dated February 7, 2018 signed by Christian Salamone, District Manager, and emails with additional technical information from Sal Mohammad, P.E. of Golder Associates, acting for DRPI, dated May 18, 2018.

This permit is issued subject to the following conditions all of which are federally enforceable except Condition 2.4 and 6.1:

1. General Provisions

1.1 This permit expires on August 31, 2021. If the equipment covered by this permit will not be constructed by August 31, 2021, an application for a new construction permit must be submitted by April 30, 2021.

1.2 DRPI agrees that all limits, restrictions and requirements in this permit are necessary to limit their potential to emit below major source thresholds. Violation of any limit, restriction or requirement contained herein may be grounds for suspension or revocation of the permit or other enforcement action for noncompliance with the permit, the failure to apply for a Title V permit, or the failure to obtain a Title V permit.

1.3 The project shall be constructed in accordance with the application described above. If any changes are necessary, revised plans must be submitted and supplemental approval issued prior to actual construction.

1.4 Representatives of the Department may, at any reasonable time, inspect this facility.

1.5 This permit may not be transferred to another location or to another piece of equipment or process.

1.6 This permit may not be transferred to another person, owner, or operator unless the transfer has been approved in advance by the Department. Approval (or disapproval) of the permit transfer will be provided by the Department in writing. A request for a permit transfer shall be received by the Department at least thirty (30) days before the date of the requested permit transfer. This request shall include:

1.6.1 Signed letters from each person stating the permit transfer is agreeable to each person; and

1.6.2 An Applicant Background Information Questionnaire pursuant to 7 Del C, Chapter 79 if the person receiving the permit has not been issued any permits by the Department in the previous five (5) years.

1.7 The applicant shall, upon completion of the construction, installation, or alteration, request that the Department grant approval to operate.

1.7.1 A separate application to operate pursuant to 7 **DE Admin. Code** 1102 does not need to be submitted to the Department for the equipment or process covered by this construction permit. Upon a satisfactory demonstration by an on-site inspection that the equipment or process complies with all of the terms and conditions of this permit, the Department shall issue approval to operate the equipment or process.

1.7.2 The applicant shall notify the Department sufficiently in advance of the demonstration and shall obtain the Department's prior concurrence of the operating factors, time period, and other pertinent details relating to the demonstration.

1.7.3 The provisions of 7 **DE Admin. Code** 1102 Sections 2.1 and 11.3 shall not apply to the operation of equipment or processes for the purposes of initially demonstrating satisfactory performance to the Department following construction, installation, modification, or alteration of the equipment or processes.

1.8 The owner or operator shall request that the terms and conditions of the construction permit be transferred to the existing synthetic minor **Permit: APC-1995/0372-OPERATION (Amendment 6)(SM)** once installation is completed.

1.9 The owner or operator shall not initiate construction, install, or alter any equipment or facility or air contaminant control device which will emit or prevent the emission of an air contaminant prior to submitting an application to the Department pursuant to 7 **DE Admin. Code** 1102, and, when applicable 7 **DE Admin. Code** 1125, and receiving approval of such application from the Department; except as exempted in 7 **DE Admin. Code** 1102 Section 2.2.

2. Emission Limitations

2.1 Air contaminant emission levels for both Flare-01 and Flare-02 combined shall not exceed those specified in 7 **DE Admin. Code** 1100 and the following:

2.1.1 Carbon Monoxide (CO) Emissions
CO emissions shall not exceed 87.4 tons per twelve (12) month rolling period;

2.1.2 Nitrogen Oxide (NO_x) Emissions
NO_x emissions shall not exceed 17.3 tons per twelve (12) month rolling period;

2.1.3 Non-Methane Organic Compound (NMOC) Emissions:
NMOC emissions shall not exceed 1.46 tons per twelve (12) month rolling period;

2.1.4 Volatile Organic Compound (VOC) Emissions:
VOC emissions shall not exceed 0.57 ton per twelve (12) month rolling period;

2.1.5 Sulfur Oxides (SO_x) Emissions:
SO_x emissions shall not exceed 87.0 tons per twelve (12) month rolling period;

2.1.6 Particulate Matter (PM) Emissions
PM Emissions shall not exceed 3.76 tons per twelve (12) month rolling period;

2.1.7 Hazardous Air Pollutant (HAP) Emissions
HAP Emissions shall not exceed 0.32 ton per twelve (12) month rolling period.

2.2 Air contaminant emission levels for Flare-01 LFG Specialties, Inc. Model PCF822I6 shall not exceed those specified in 7 **DE Admin. Code** 1100 and the following:

2.2.1 Carbon Monoxide (CO) Emissions
CO emissions shall not exceed 12.25 pounds per hour;

2.2.2 Nitrogen Oxide (NO_x) Emissions
NO_x emissions shall not exceed 2.25 pounds per hour;

2.2.3 Non-Methane Organic Compound (NMOC) Emissions:
NMOC emissions shall not exceed 0.19 pound per hour;

2.2.4 Volatile Organic Compound (VOC) Emissions:
VOC emissions shall not exceed 0.08 pound per hour;

2.2.5 Sulfur Oxides (SO_x) Emissions:
SO_x emissions shall not exceed 9.91 pounds per hour;

2.2.6 Particulate Matter (PM) Emissions
PM emissions shall not exceed 0.49 pound per hour;

2.2.7 Hazardous Air Pollutant (HAP) Emissions
HAP emissions shall not exceed 0.042 pound per hour.

2.3 Air contaminant emission levels for Flare-02 LFG Specialties, LLC Model CFT8228I6 shall not exceed those specified in 7 **DE Admin. Code** 1100 and the following:

2.3.1 Carbon Monoxide (CO) Emissions
CO emissions shall not exceed 11.55 pounds per hour;

2.3.2 Nitrogen Oxide (NO_x) Emissions
NO_x emissions shall not exceed 2.53 pounds per hour;

2.3.3 Non-Methane Organic Compound (NMOC) Emissions:
NMOC emissions shall not exceed 0.22 pound per hour;

2.3.4 Volatile Organic Compound (VOC) Emissions:
VOC emissions shall not exceed 0.09 pound per hour;

2.3.5 Sulfur Oxides (SO_x) Emissions:
SO_x emissions shall not exceed 11.15 pounds per hour;

2.3.6 Particulate Matter (PM) Emissions
PM emissions shall not exceed 0.55 pound per hour;

2.3.7 Hazardous Air Pollutant (HAP) Emissions
HAP emissions shall not exceed 0.047 pound per hour.

2.4 Odors from this source shall not be detectable beyond the plant property line in sufficient quantities such as to cause a condition of air pollution.

2.5 The emission of visible air contaminants from this facility shall not exceed:

2.5.1 For the flare, zero (0) opacity, except for periods not to exceed five (5) minutes during any consecutive two (2) hour period, as stated in 40 CFR Method 22.

2.5.2 For the facility, emission of visible air contaminants shall not exceed twenty percent (20%) opacity for an aggregate of more than three (3) minutes in any one (1) hour period, or more fifteen (15) minutes in any twenty-four (24) hour period.

3. Operational Limitations

3.1 The owner or operator shall comply with the following operational limits:

3.1.1 The total landfill gas flow rate to Flare-01 and Flare-02 combined shall not exceed 2,100 scfm at 45% methane on a one-hour rolling average.

3.1.2 The landfill gas flow rate to Flare-01 shall not exceed 1200 scfm at 45% methane on a one-hour rolling average. The landfill gas flow rate to Flare-02 shall not exceed 1,350 scfm at 45% methane on a one-hour rolling average.

3.1.3 The total amount of landfill gas burned through both flares combined shall be no more than 1,103.8 MMscf per twelve (12) month rolling period.

3.1.4 The project shall be constructed in accordance with the application and air permits as well as the Delaware Regulations Governing Solid Waste.

3.1.5 The collection system shall be operated such that all collected gases at the blower/fan are vented to the open flares. In the event the collection system or open flares are inoperable, the following action shall be taken:

3.1.5.1 The system blowers shall be shut down.

3.1.5.2 The main header valve shall automatically close and stop the flow of gas to the flares.

3.2 If emissions of SO_x exceed 80 tons per rolling twelve month period, the facility shall notify the Department within fifteen (15) calendar days from the monthly emissions calculation and perform an analysis of hydrogen sulfide/sulfur oxide emission control technologies. The analysis must include the environmental technologies and technological feasibility. If control technologies are determined to be feasible then the facility must propose a schedule within one hundred twenty (120) days from the date of notification. The proposed schedule is subject to Department approval for permitting and implementation.

3.3 At all times, including periods of startup, shutdown, and malfunction, the owner or operator shall, to the extent practicable, maintain and operate the facility including associated air pollution control equipment in a manner consistent with good air pollution control practice for minimizing emissions. Determination of whether acceptable operating procedures are being used shall be based on information available to the Department which may include, but is not limited to, monitoring results, visible emissions observations, review of operating and maintenance procedures, and inspection of the source.

3.4 All structural and mechanical components of the equipment or process covered by this Permit shall be maintained in proper operating condition.

3.5 Flare-02 shall be equipped with a temperature indicator and recorder to measure and record the gas temperature in the flare stack and a flow monitor to indicate the flow of the landfill gas. The following shall be maintained:

3.5.1 The temperature indicator and recorder shall be operational when the flare is in operation.

3.5.2 The flare shall be operated with a flame present at all times.

3.5.3 The presence of a flare pilot flame shall be monitored using a thermocouple or any other equivalent device to detect the presence of a flame.

3.5.4 The flare temperature control shall automatically shut down the flare if the stack temperature drops below 300 degrees Fahrenheit.

3.5.5 When the flare is in operation, gas flow shall be monitored and recorded at least once every 15 minutes.

3.5.6 The flare shall be operated at all times when the collected gas is routed to the device. In the event the flare is inoperable the gas mover system will shut down and all valves in the collection and control system contributing to venting of the gas to the atmosphere shall be closed within one hour.

3.5.7 The temperature indicator and flow monitor shall be calibrated per manufacturer's requirements.

3.6 The flare shall be equipped with a flame arrester to prevent flashback to the landfill.

3.7 The flare shall have a NMOC destruction efficiency of at least 98%.

3.8 The owner or operator shall install, calibrate, maintain, and operate an automatic control system to notify the flare operator of flare failure, upset, or breakdown.

3.9 The owner or operator shall not cause or allow land clearing, land grading (including grading for roads), excavation, or the use of non-paved roads on private property unless methods, such as the application of water or the use of other techniques approved by the Department, are employed to control dust emissions when the Department determines that such activities could emit dust in quantities sufficient to cause air pollution.

3.10 The owner or operator shall not cause or allow stockpiling or other storage of material or transport to or from a storage facility in such a manner as may cause a condition of air pollution. The owner or operator shall not cause or allow visible particulate emissions of any material being transported by a motor vehicle.

4. Testing and Monitoring Requirements

4.1 The Department reserves the right to require that the owner or operator perform emission tests using methods approved in advance by the Department.

4.2 The landfill gas shall be analyzed for hydrogen sulfide concentrations at least once a month using Department approved methods.

4.3 When the flare is in operation, a flow meter shall be used to continuously monitor and record gas flow rate to this unit at least once every 15 minutes.

4.4 An odor survey shall be conducted once a week around the perimeter of the landfill.

4.5 In response to substantiated odor complaints, quantitative measuring of hydrogen sulfide shall be conducted around the perimeter of the landfill as soon as possible. If odor is detected beyond the perimeter of the landfill, the company shall take immediate actions to remediate the problem.

4.6 During daylight hours when the flare is in operation, the owner or operator shall conduct daily qualitative visible emissions observations (similar to Method 22) of the flare to evaluate the presence or absence of smoke and/or visible air contaminants during a continuous five (5) minute period while the flare is operating. If visible emissions are detected, the owner and/or operator shall take all means necessary to minimize emissions

and to operate the flare without visible emissions. The term "all means necessary" may include, but is not limited to shutting down the flare.

5. Record Keeping Requirements

5.1 The owner or operator shall maintain all records necessary for determining compliance with this permit in a readily accessible location for five (5) years and shall make these records available to the Department upon written or verbal request.

5.2 The following information shall be recorded, initialed and maintained in a log:

5.2.1 Odor survey results as per Condition 4.4. This shall include at a minimum the presence or absence of odor, wind direction, the ambient air temperature during the survey and actions taken in response to odors found.

5.2.2 Visible emission monitoring results as outlined by Condition 4.6.

5.2.3 Daily hours of flare operation.

5.2.4 Reason(s) why the landfill gas collection system and/or flare is (are) inoperable.

5.2.5 The net stack temperature for at least once every 15 minutes when flare is in operation.

5.2.6 Inspection and maintenance records of flare. Inspection and maintenance shall be performed as recommended by the manufacturer.

5.2.7 The quantity of auxiliary fuel (propane) used (monthly).

5.2.8 Daily and rolling twelve (12) month total gas flow (scfm) to each flare and the combined total to both flares.

5.2.9 For each flare and the combined total of both flares, monthly and rolling twelve month emissions of NO_X, SO_X, CO, NMOCs, VOCs, PM and HAPs. Emissions shall be calculated based on the amount of landfill gas combusted and the following emission factors: For NO_X and CO, emissions shall be calculated using the manufacturer's guarantees. NMOC, VOC, PM and HAP emissions shall be calculated based on AP-42 Section 2.4. (Municipal Solid Waste Landfills) as applicable. Sulfur oxides emissions shall be based on hydrogen sulfide sampling results. The emissions calculations shall be completed and recorded by the end of each calendar month for the previous month.

5.2.10 Hydrogen sulfide concentration monitoring results as outlined by Condition 4.2. This shall include the calibration records of hydrogen sulfide monitoring device.

5.2.11 Odor complaints or landfill gas collection system upsets.

5.2.12 Daily compliance inspection of the landfill pursuant to Conditions 3.9 and 3.10.

5.2.13 Calibration and maintenance records of the temperature indicator and flow monitor described in Condition 3.5.

5.3 The Company shall maintain a fugitive dust control measures plan. The plan shall address the operating requirements of Conditions 3.9 and 3.10 and a copy of the plan, monitoring results, and corrective actions shall be maintained on site.

6. Reporting Requirements

6.1 Emissions in excess of any permit condition or emissions which create a condition of air pollution shall be reported to the Department immediately upon discovery by calling the Environmental Emergency Notification and Complaint number, (800) 662-8802.

6.2 In addition to complying with Condition 6.1 of this permit, any reporting required by 7 **DE Admin. Code** 1203 "**Reporting of a Discharge of a Pollutant or an Air Contaminant**", and any other reporting requirements mandated by the State of Delaware, the owner or operator shall, for each occurrence of excess emissions, within thirty (30) calendar days of becoming aware of such occurrence, supply the Department in writing with the following information:

6.2.1 The name and location of the facility;

6.2.2 The subject source(s) that caused the excess emissions;

6.2.3 The time and date of the first observation of the excess emissions;

6.2.4 The cause and expected duration of the excess emissions;

6.2.5 For sources subject to numerical emission limitations, the estimated rate of emissions (expressed in the units of the applicable emission limitation) and the operating data and calculations used in determining the magnitude of the excess emissions; and

6.2.6 The proposed corrective actions and schedule to correct the conditions causing the excess emissions.

6.3 The Company shall submit a summary report to the Department semi-annually, including the following information:

6.3.1 Statement of compliance or non-compliance with the emission limitations outlined by Conditions 2.1, 2.2 and 2.3 of this permit.

6.3.2 Hydrogen sulfide monitoring results as outlined by Condition 4.2.

6.3.3 Odor survey as per Condition 4.5 and the actions taken to remediate the odor problem.

6.3.4 The semi-annual reports shall be submitted as follows:

Report	Time covered	When to submit
Semi-annual report #1	January-June of each calendar year	By July 31st of each calendar year
Semi-annual report #2	July-December of each calendar year	By January 31st of the current calendar year for the previous calendar year.

6.4 One (1) original and one (1) copy of all required reports shall be sent to the address below:

Division of Air Quality
State Street Commons
100 W. Water Street, Suite 6A
Dover, DE 19904

7. Administrative Conditions

7.1 This permit shall be made available on the premises.

7.2 Failure to comply with the provisions of this permit may be grounds for suspension or revocation.

Sincerely,

Angela D. Marconi, P.E., BCEE
Program Manager
Engineering & Compliance Branch

ADM:KAM:JPK
F:\EngAndCompliance\JPK\jpk18041.doc

pc: Dover File

STATE OF DELAWARE
DEPARTMENT OF NATURAL RESOURCES
& ENVIRONMENTAL CONTROL
DIVISION OF AIR QUALITY
655 S. Bay Road, Suite 5N
DOVER, DELAWARE 19901

Telephone: (302) 739 - 9402
Fax No.: (302) 739 - 3106

April 30, 2013

Permit: APC-2013/0106-CONSTRUCTION

Delaware Recyclable Products, Inc. (DRPI)
Gas Extraction System for Industrial Waste Landfill: Cell No. 6
246 Marsh Lane
New Castle, DE 19720

ATTENTION: Dan Bergan
District Manager

Dear Mr. Bergan:

Pursuant to 7 **DE Admin. Code** 1102, Section 2, approval of the Department of Natural Resources and Environmental Control (the Department) is hereby granted for the continuation of construction of Cell No. 6 and extension of the gas extraction system located at the DRPI industrial waste landfill at 246 Marsh Lane, New Castle, Delaware, in accordance with the application submitted on Form Nos. AQM-1, AQM-2, AQM-4.3 and AQM-5 dated March 15, 2013 signed by Dan Bergan, and emails describing construction status from Bruce Fahs, Gas Operations Manager, dated March 18, 2013 and March 22, 2013. The construction includes completion of Cell Nos. 6-2a and 6-2b with condensate pump stations, gas collection trenches under the existing landfill liner, vertical gas wells and completion of a 12" diameter header connecting Cell Nos. 6 and 1.

This permit is issued subject to the following conditions:

1. General Provisions

1.1 This permit expires on April 30, 2016. If the equipment covered by this permit will not be constructed by April 30, 2016, an application for renewal of this construction permit must be submitted by January 30, 2016.

1.2 The project shall be constructed in accordance with the application described above. If any changes are necessary, revised plans must be submitted and supplemental approval issued prior to actual construction.

1.3 Representatives of the Department may, at any reasonable time, inspect this facility.

1.4 This permit may not be transferred to another location or to another piece of equipment or process.

1.5 This permit may not be transferred to another person, owner, or operator unless the transfer has been approved in advance by the Department. Approval (or disapproval) of

the permit transfer will be provided by the Department in writing. A request for a permit transfer shall be received by the Department at least thirty (30) days before the date of the requested permit transfer. This request shall include:

1.5.1 Signed letters from each person stating the permit transfer is agreeable to each person; and

1.5.2 An Applicant Background Information Questionnaire pursuant to 7 Del C, Chapter 79 if the person receiving the permit has not been issued any permits by the Department in the previous five (5) years.

1.6 The applicant shall, upon completion of the construction, installation, or alteration, request that the Department grant approval to operate.

1.6.1 A separate application to operate pursuant to 7 **DE Admin. Code** 1102 does not need to be submitted to the Department for the equipment or process covered by this construction permit. Upon a satisfactory demonstration by an on-site inspection that the equipment or process complies with all of the terms and conditions of this permit, the Department shall issue approval to operate the equipment or process.

1.6.2 The applicant shall notify the Department sufficiently in advance of the demonstration and shall obtain the Department's prior concurrence of the operating factors, time period, and other pertinent details relating to the demonstration.

1.6.3 The provisions of 7 **DE Admin. Code** 1102 Sections 2.1 and 11.3 shall not apply to the operation of equipment or processes for the purposes of initially demonstrating satisfactory performance to the Department following construction, installation, modification, or alteration of the equipment or processes.

1.7 The owner or operator shall not initiate construction, install, or alter any equipment or facility or air contaminant control device which will emit or prevent the emission of an air contaminant prior to submitting an application to the Department pursuant to 7 **DE Admin. Code** 1102, and, when applicable 7 **DE Admin. Code** 1125, and receiving approval of such application from the Department; except as exempted in 7 **DE Admin. Code** 1102 Section 2.2.

2. Emission Limitations

2.1 Air contaminant emission levels shall not exceed those specified in 7 **DE Admin. Code** 1100 and the following:

2.1.1 Carbon Monoxide (CO) Emissions
CO emissions shall not exceed 55.1 tons per twelve (12) month rolling period.

2.1.2 Nitrogen Oxide (NO_x) Emissions
NO_x emissions shall not exceed 10.12 tons per twelve (12) month rolling period.

2.1.3 Non-methane Organic Compound (NMOC) Emissions:
NMOC emissions shall not exceed 12.74 tons per twelve (12) month rolling period.

2.1.4 Volatile Organic Compound (VOC) Emissions:
VOC emissions shall not exceed 10.19 tons per twelve (12) month rolling period.

2.1.5 Sulfur Oxides (SO_x) Emissions:
SO_x emissions shall not exceed 87.0 tons per twelve (12) month rolling period.

2.2 Odors from this source shall not be detectable beyond the plant property line in sufficient quantities such as to cause a condition of air pollution.

2.3 The emission of visible air contaminants from this facility shall not exceed:

2.3.1 For the flare, zero (0) opacity, except for periods not to exceed five (5) minutes during any consecutive two (2) hour period, as stated in 40 CFR Method 22.

2.3.2 For the facility, emission of visible air contaminants shall not exceed twenty percent (20%) opacity for an aggregate of more than three (3) minutes in any one (1) hour period, or more fifteen (15) minutes in any twenty-four (24) hour period.

3. Operational Limitations

3.1 The owner or operator shall comply with the following operational limits:

3.1.1 The landfill gas flow rate to the flare shall not exceed 1,100 scfm on one-hour rolling average.

3.1.2 The project shall be constructed in accordance with the application and air permits as well as the Delaware Regulations Governing Solid Waste.

3.1.3 The collection system shall be operated such that all collected gases at the blower/fan are vented to the open flare. In the event the collection system or open flare is inoperable, the following action shall be taken:

3.1.3.1 The system blowers shall be shut down.

3.1.3.2 The main header valve shall automatically close and stop the flow of gas to the flare.

3.2 If emissions of SO_x exceed 80 tons per rolling twelve month period, the facility shall notify the Department within fifteen (15) calendar days from the monthly emissions calculation and perform an analysis of hydrogen sulfide/sulfur oxide emission control technologies. The analysis must include the environmental technologies and technological feasibility. If control technologies are determined to be feasible then the facility must propose a schedule within one hundred twenty (120) days from the date of notification. The proposed schedule is subject to Department approval for permitting and implementation.

3.3 At all times, including periods of startup, shutdown, and malfunction, the owner or operator shall, to the extent practicable, maintain and operate the facility including associated air pollution control equipment in a manner consistent with good air pollution control practice for minimizing emissions. Determination of whether acceptable operating

procedures are being used shall be based on information available to the Department which may include, but is not limited to, monitoring results, visible emissions observations, review of operating and maintenance procedures, and inspection of the source.

3.4 All structural and mechanical components of the equipment or process covered by this Permit shall be maintained in proper operating condition.

3.5 The flare shall be equipped with a temperature indicator and recorder to measure and record the gas temperature in the flare stack and a flow monitor to indicate the flow of the landfill gas. The following shall be maintained:

3.5.1 The temperature indicator and recorder shall be operational when the flare is in operation.

3.5.2 The flare shall be operated with a flame present at all times.

3.5.3 The presence of a flare pilot flame shall be monitored using a thermocouple or any other equivalent device to detect the presence of a flame.

3.5.4 The flare temperature control shall automatically shut down the flare if the stack temperature drops below 300 degrees Fahrenheit.

3.5.5 When the flare is in operation, gas flow shall be monitored and recorded.

3.5.6 The flare shall be operated at all times when the collected gas is routed to the device. In the event the flare is inoperable the gas mover system will shut down and all valves in the collection and control system contributing to venting of the gas to the atmosphere shall be closed within one hour.

3.6 The flare shall be equipped with a flame arrester to prevent flashback to the landfill.

3.7 The flare shall have a NMOC destruction efficiency of at least 98%.

3.8 The owner or operator shall not cause or allow land clearing, land grading (including grading for roads), excavation, or the use of non-paved roads on private property unless methods, such as the application of water or the use of other techniques approved by the Department, are employed to control dust emissions when the Department determines that such activities could emit dust in quantities sufficient to cause air pollution.

3.9 The owner or operator shall not cause or allow stockpiling or other storage of material or transport to or from a storage facility in such a manner as may cause a condition of air pollution. The owner or operator shall not cause or allow visible particulate emissions of any material being transported by a motor vehicle.

4. Testing and Monitoring Requirements

4.1 The Department reserves the right to require that the owner or operator perform emission tests using methods approved in advance by the Department.

4.2 The landfill gas shall be analyzed for hydrogen sulfide concentrations at least once a month using Department approved methods.

4.3 When the flare is in operation, a flow meter shall be used to continuously monitor and record gas flow rate to this unit.

4.4 Conduct an odor survey once a week around the perimeter of the landfill.

4.5 In response to substantiated odor complaints, quantitative measuring of hydrogen sulfide shall be conducted around the perimeter of the landfill as soon as possible. If odor is detected beyond the perimeter of the landfill, the company shall take immediate actions to remediate the problem.

4.6 Once a month, conduct visible emissions monitoring to demonstrate compliance with Condition 2.3. The visible emissions monitoring on the flare shall be conducted during day-light hours when this unit is in operation.

5. Record Keeping Requirements

5.1 The owner or operator shall maintain all records necessary for determining compliance with this permit in a readily accessible location for five (5) years and shall make these records available to the Department upon written or verbal request.

5.2 The following information shall be recorded, initialed and maintained in a log:

5.2.1 Odor survey results as per Condition 4.4. This shall include at a minimum the presence or absence of odor, wind direction, and the ambient air temperature during the survey.

5.2.2 Visible emission monitoring results as outlined by Condition 4.6.

5.2.3 Daily hours of flare operation.

5.2.4 Reason(s) why the landfill gas collection system and/or flare is (are) inoperable.

5.2.5 The net stack temperature when flare is in operation.

5.2.6 Inspection and maintenance records of flare. Inspection and maintenance shall be performed as recommended by the manufacturer.

5.2.7 The quantity of auxiliary fuel (propane) used (monthly).

5.2.8 Daily and rolling twelve (12) month total gas flow (scfm) to the flare.

5.2.9 Monthly and rolling twelve month emissions of oxides of nitrogen, sulfur oxides, carbon monoxide, non-methane organic compounds and volatile organic compounds. Emissions shall be calculated based on the amount of landfill gas combusted and the following emission factors: For oxides of nitrogen and carbon monoxide, emissions shall be calculated using emission factors from AP-42 Section 13.5 (Industrial Flares). NMOC and VOC emissions shall be calculated based on 40 CFR Section 60.752(b)(2)(iii)(B) and AP-42 Section 2.4.4.1 (Municipal Solid Waste Landfills), as applicable. Sulfur oxides emissions shall be based on hydrogen

sulfide sampling results. The emissions calculation shall be completed and recorded by the end of each calendar month for the previous month.

5.2.10 Hydrogen sulfide concentration monitoring results as outlined by Condition 4.2. This shall include the calibration records of hydrogen sulfide monitoring device.

5.2.11 Odor complaints or landfill gas collection system upset.

5.2.12 Daily compliance inspection of the landfill pursuant to Conditions 3.8 and 3.9.

5.3 No later than July 31, 2013, the Company shall submit to the Department a fugitive dust control measures plan. The plan shall address the operating requirements of Conditions 3.8 and 3.9 and a copy of the plan shall be maintained on site.

6. Reporting Requirements

6.1 Emissions in excess of any permit condition or emissions which create a condition of air pollution shall be reported to the Department immediately upon discovery by calling the Environmental Emergency Notification and Complaint number, (800) 662-8802.

6.2 In addition to complying with Condition 6.1 of this permit, any reporting required by 7 **DE Admin. Code** 1203 "**Reporting of a Discharge of a Pollutant or an Air Contaminant**", and any other reporting requirements mandated by the State of Delaware, the owner or operator shall, for each occurrence of excess emissions, within thirty (30) calendar days of becoming aware of such occurrence, supply the Department in writing with the following information:

6.2.1 The name and location of the facility;

6.2.2 The subject source(s) that caused the excess emissions;

6.2.3 The time and date of the first observation of the excess emissions;

6.2.4 The cause and expected duration of the excess emissions;

6.2.5 For sources subject to numerical emission limitations, the estimated rate of emissions (expressed in the units of the applicable emission limitation) and the operating data and calculations used in determining the magnitude of the excess emissions; and

6.2.6 The proposed corrective actions and schedule to correct the conditions causing the excess emissions.

6.3 The Company shall submit a summary report to the Department semi-annually, including the following information:

6.3.1 Statement of compliance or non-compliance with the emission limitations outlined by Condition 2.1 of this permit.

6.3.2 Hydrogen sulfide monitoring results as outlined by Condition 4.2. The semi-annual reports shall be submitted as follows:

Report	Time covered	When to submit
Semi-annual report #1	January-June of each calendar year	By July 31st of each calendar year
Semi-annual report #2	July-December of each calendar year	By January 31st of the current calendar year for the previous calendar year.

6.3.3 Odor survey as per Condition 4.5 and the actions taken to remediate the odor problem.

6.4 One original and one copy of all required reports shall be sent to the address below:

Division of Air Quality
Blue Hen Corporate Center
655 S. Bay Road, Suite 5 N
Dover, DE 19901

7. Administrative Conditions

7.1 This permit shall be made available on the premises.

7.2 Failure to comply with the provisions of this permit may be grounds for suspension or revocation.

Sincerely,

Paul E. Foster, P.E.
Program Manager
Engineering & Compliance Branch

PEF:TMH:JPK
F:\EngAndCompliance\JPK\jpk13037 DRPI Cell No. 6 CONST Permit.doc

pc: Dover File

STATE OF DELAWARE
DEPARTMENT OF NATURAL RESOURCES
& ENVIRONMENTAL CONTROL
DIVISION OF AIR & WASTE MANAGEMENT
715 GRANTHAM LANE
NEW CASTLE, DELAWARE 19720

AIR RESOURCES
SECTION

TELEPHONE: (302) 323 - 4542
FAX No.: (302) 323-4598

September 29, 1997

Permit: APC-95/0372-OPERATION (Amendment 1)
Sanifill - Delaware Recyclable Products, Inc.
Landfill Gas Recovery System with Flaring - New Castle

RECEIVED
OCT 02 1997
By

Sanifill - Delaware Recyclable Products, Inc.
Suite 200
201 Marsh Lane
New Castle, Delaware 19720

ATTENTION: N. Howard Burns
District Manager

Gentlemen:

Pursuant to the State of Delaware "Regulations Governing the Control of Air Pollution", Regulation No. 2, Section 2, approval of the Department of Natural Resources and Environmental Control is hereby granted for the operation of a Landfill Gas Extraction System on cells 1, 2, 3 and 4 and a 26.4 MMbtu/hr candlestick type combustion flare at the Delaware Recyclable Products, Inc. dry waste landfill at Minquadale in New Castle, Delaware, in accordance with the application submitted on Form No. AR-2 dated June 30, 1994 signed by Matthew P. Williams and the application to amend the operating permit dated June 12, 1997 signed by Matthew P. Williams .

This permit is issued subject to the following conditions:

1. Air contaminant emissions from the combustion flare shall not exceed :

   a. 24.0 Tons per Year (TPY) Carbon Monoxide calculated per Table 13.5-1 AP-42 Section 13.5 (Industrial Flares) Fifth Edition dated 1/95.
   b. 4.3 Tons per Year (TPY) Oxides of nitrogen calculated per Table 13.5-1 from AP- 42 Section 13.5 (Industrial Flares) Fifth Edition dated 1/95.
   c. 2.5 Tons per Year of Non-methane organic compounds (NMOC) as calculated based on 40 C.F.R. Section 60.752(b) (2) (iii) (B) and the statement in AP-42 section 13.5-2 that "properly operated flares achieve at least 98% combustion efficiency in the flare plume.
   d. 2.0 Tons per Year of Volatile Organic Compounds (VOC) based on 40 C.F.R. Section 60.752(b) (2) (iii) (B) and the statement in AP-42 section 13.5-2 that "properly operated flares achieve at least 98% combustion efficiency in the flare plume, and;
   e. Those specified by the State of Delaware "Regulations Governing the Control of Air Pollution".

2. The Company shall operate a collection and control system that effectively collects gas from cells 1, 2, 3 and 4 in the landfill, and that routes all the collected gases to the 26.4 mmBtu/hr candlestick flare which shall be operated at all times. The collection system shall be operated such that all collected gases are vented to the open flare. In the event the collection system or open flare is inoperable, the following action will be taken:

   a. The system blowers will be shut down.
   b. All valves in the collection and control system contributing to the venting of gas to the atmosphere will be closed within one hour.

3. Representatives of the Department of Natural Resources and Environmental Control may, at any reasonable time, inspect the facility.

4. The project shall be operated in accordance with the application described above, as well as, the Delaware Regulations Governing Solid Waste.

5. The Company shall not cause or allow the emission of odorous air contaminants in such quantities as to interfere with any person's enjoyment of life and properties.

6. When the flare is operating a temperature of at least 1400 degrees Fahrenheit will be maintained in the flare stack.

   a. The flare will be equipped with a temperature indicator and recorder to measure and record the gas temperature in the flare stack.
   b. The temperature indicator and recorder will be operational when the flare is in operation.

7. The landfill gas extraction and combustion system shall be monitored in accordance with the Delaware Recyclable Products, Inc. (DRPI) LFG Odor Control Systems Operation Plan Monitoring section. If odor complaints are received and substantiated by the Department of Natural Resources and Environmental Control or Delaware Recyclable Products, Inc., the interior and perimeter monitoring schedule shall be accelerated until the source of the odor has been corrected. The monitoring conditions shall consist of the following:

   a. Note the location of "strong" odors emanating from the landfill or components detected during system monitoring.
   b. Discuss odors with on-site personnel to check if an excursion has occurred since the last monitoring round.
   c. Drive the perimeter road of the landfill cells and the perimeter of the property and note any odors that could be migrating off site.
   d. Record meteorology conditions.
   e. In response to substantiated odor complaints, quantitative measuring of hydrogen sulfide and other landfill gas components shall be conducted. Measurement of hydrogen sulfide shall be conducted with equipment capable of reading parts per billion (ppb).

8. Landfill perimeter monitoring in response to odor complaints shall include, but not be limited to, documentation of the following:

   a. Weather conditions, temperature, wind speed and direction, barometric pressure, cloud covering in percent, cloud type and estimated height.
   b. Location and direction of strong odors shall be marked on a copy of the site plan and placed with the monitor data sheet.

9. If, in the opinion of the Department, the operation of this facility causes an air pollution problem, the Department may require additional emission control measures.

10. Calibration checks and zero and span adjustments conducted on monitoring equipment shall be recorded on the data reporting forms.

11. The flare and connected piping system shall be maintained in proper operating condition.

12. The flare shall be equipped with a flame arrester to prevent flashback to the landfill.

13. Conditions that require venting of materials to the atmosphere in excess of any permit condition or create a condition of air pollution shall be reported to the Division of Air and Waste Management immediately.

14. The owner or operator shall, at all times, including periods of startup, shutdown, and malfunction, to the extent practicable, maintain and operate the facility in a manner consistent with good air pollution control practice for minimizing emissions.

15. This permit does not constitute agreement with any future air pollution control plan or approval for construction and operation of air pollution control equipment other than the operation of the combustion flare.

16. The emission of visible air contaminants from this unit shall not exceed zero (0) opacity.

17. An updated, complete set of as-built drawings and an updated operations manual shall be made available to the Department within ninety (90) days of completing the installation of the additional extraction wells for cell #4.

18. This permit shall be available on the premises.

19. Failure to comply with the preceding conditions may result in suspension or revocation of this permit.

Sincerely,

Robert J. Taggart

Robert J. Taggart
Program Manager
Engineering & Compliance Branch

RJT:JHW:sr/sk/sr
JHW97043

pc: Dover File

DRAFT

AIR PERMIT APPLICATION

Delaware Recyclable Products, Inc. (DRPI) Landfill
New Castle, Delaware

APPLICATION

Submitted To: Air Quality Management
Department of Natural Resources and Environmental Control
Blue Hen Corporate Center
655 South Bay Road, Suite 5N
Dover, DE 19901

Submitted By: Golder Associates Inc.
10 Canal Street, Suite 217
Bristol, PA 19007 USA

Distribution: 3 Copies – DNREC
2 Copies – DRPI

October 2017 **1785703**

A world of capabilities delivered locally

Golder Associates

Golder, Golder Associates and the GA globe design are trademarks of Golder Associates Corporation

EXECUTIVE SUMMARY

Delaware Recyclable Products, Inc. (DRPI) Landfill, located in New Castle, Delaware, is an industrial waste landfill operating under Delaware Department of Natural Resources and Environmental Control (DNREC) solid waste Permit No. SW-05-01. The landfill also holds an air construction Permit No. APC-2013/0106-Construction, which expired on April 30, 2016, and a renewal application for Permit No. APC-2016/0084-Construction was submitted on January 30, 2016, which is currently under review by DNREC.

DRPI desires to increase the permitted landfill gas (LFG) flow rate for its existing candlestick flare and also install a new candlestick flare, which requires an air permit for these desired changes, and this document constitutes the requisite air permit application and supporting documentation for these proposed changes.

The landfill is permitted to accept only C&D waste, dry waste, and non-hazardous industrial waste solids. Landfill gas is collected and controlled by a flare at the site. The existing flare emissions to the atmosphere are regulated in the above-noted air construction permits.

Table of Contents

EXECUTIVE SUMMARY ES-1
1.0 INTRODUCTION 1
2.0 CURRENT FACILITY DESCRIPTION 2
2.1 Landfill Gas (LFG) Flow Rate to Flare 3
2.2 Emission Limits 4
3.0 PROJECT DESCRIPTION 5
3.1 Proposed Flare 5
4.0 PROJECT EMISSIONS 7
5.0 REGULATORY APPLICABILITY ANALYSIS 8
5.1 Proposed Change to Emissions Limits 9
6.0 CONTROL TECHNOLOGY ASSESSMENT 11
6.1 Step 1 – Identification of Potentially Applicable Control Technologies 11
6.1.1 Combustion Controls 12
6.1.2 Add-On Controls 12
6.2 Step 2 – Evaluation of Technically Feasible Control Alternatives 12
6.3 Step 3 – Ranking of Technically Feasible Control Alternatives 12
6.4 Step 4 – Evaluation of Economic, Environmental, and Energy Impacts of Feasible Technologies 12
6.4.1 Energy Impacts 12
6.4.2 Environmental Impacts 12
6.4.3 Economic Impacts 13
6.5 Step 5 – Selection of Control Technology 13
7.0 CLOSING 14
8.0 REFERENCES 15

List of Tables

Table 1 Average Monthly Landfill Gas Flow Rates
Table 2 Permitted Flare Emission Limits
Table 3 Potential Emissions from Existing 1,200 scfm open flare (Model PCF822I6) - Flare01
Table 4 Potential Emissions from Proposed 900 scfm open flare (Model CFT828I6) - Flare02
Table 5 Potential Hazardous Air Pollutant Emissions from Existing - Flare01
Table 6 Potential Hazardous Air Pollutant Emissions from Proposed - Flare02
Table 7 Actual Annual Emissions (2007 - 2016)
Table 8 Actual Annual Emissions, Highest 2-Year Average (2007 - 2016)
Table 9 Major Source Applicability Analysis
Table 10 Proposed Changes to Flare Emission Limits

List of Appendices

Appendix A Form AQM-1 Administrative Information
Appendix B Form AQM-2 Process Flow Diagram
Appendix C1 Form AQM-4.3 Flare Application (Existing)
Appendix C2 Form AQM-4.3 Flare Application (Proposed)
Appendix D Form AQM-5 Emissions Information
Appendix E Proposed Flare System Specifications
Appendix F Permit Fees

1.0 INTRODUCTION

The applicant, DRPI, currently holds air construction Permit No. APC-2013/0106-Construction, which was issued by DNREC on April 30, 2013. This permit covers one (1) flare and its associated landfill gas collection system. An application to renew Permit No. APC-2013/0106-Construction was submitted in January 30, 2016, which is currently under review by DNREC.

The existing flare (ID Flare-01) at the DRPI Landfill is limited to 1,100 standard cubic feet per minute (scfm) of landfill gas (LFG) flow on an hourly rolling average basis. DRPI desires to: (i) increase the capacity of Flare-01 from 1,100 scfm to 1,200 scfm; and (ii) install a new candlestick flare (ID Flare-02) with a maximum design LFG flow rate of 1,350 scfm. DRPI however desires to limit the total gas flaring capacity to 2,100. Increasing capacity of the existing flare and addition of a new flare will increase air emissions potential of the landfill, and based on DNREC requirements, an air permit is required for the operation of flares and construction of the new flare. Furthermore, it should be noted that the existing flare (ID Flare-01) already has a design capacity of 1,200 scfm of LFG flow and therefore, this application assumed a flow rate of 900 scfm from Flare-02 for emissions estimation purposes.

This air permit application was prepared following Section 11.0 of Title 7 of Delaware Administrative Code (7 DE Admin Code) 1102 (Permits), and includes the following information:

- Description of the project operation and the proposed changes
- Emissions calculations
- Process flow diagram
- An updated plan drawing that shows landfill gas wells and the location of the existing and proposed flares
- Regulatory applicability analysis
- Control technology assessment
- DNREC permit application forms
  - AQM-1 – Administrative Information (see Appendix A)
  - AQM-2 – Process Diagram (see Appendix B)
  - AQM-4.3 – Existing Flare Application (see Appendix C1)
  - AQM-4.3 – Proposed Flare Application (see Appendix C2)
  - AQM-5 – Emissions Information (Appendix D)

2.0 CURRENT FACILITY DESCRIPTION

The DRPI Landfill is permitted under DNREC solid waste Permit No. SW-05-01 to accept a maximum of 2,400 tons per day (TPD) of waste for disposal, which includes the following materials:

- Construction and demolition debris (C&D waste) including roofing materials, wood, metal, drywall, carpeting, upholstery, foam rubber, conduit, laminated wood products, rock, brick, concrete, ceramics, glass, asphalt paving, and incidental asphalt products.
- Dry waste as defined by the Delaware Regulations Governing Solid Waste. This includes plastic, rubber, lumber, trees, and vegetative matter.
- Non-hazardous industrial waste solids if approved by the Department. Waste characterization representative of the waste stream shall be required. The Department has authorized the acceptance of petroleum coke gasifier slag and fines (a non-hazardous industrial waste solid) from the Delaware City Refinery on June 5, 2009.

The landfill property boundary encompasses approximately 203 acres, of which 165.4 acres make up the waste disposal footprint (Figure 1). Waste disposal is currently occurring in Cell No. 6-1B, which is a sub-unit of the Cell 6 disposal area. As each working cell is filled, new cells are prepared for waste disposal. Construction of new cells is ongoing at the landfill as long as waste is being accepted. LFG is extracted from wells distributed throughout the waste mass that has been placed in the landfill. As new cells are completed, additional wells are added to the system to extract LFG from the new areas (Figure 1).

LFG is currently routed to a single, existing candlestick type flare (ID Flare-01), which is a Landfill Gas Specialties model PCF822I6 and limited by the air permit to accommodate up to 1,100 scfm of LFG. The Flare-01 specifications indicate a design destruction capability of at least 98 percent of the methane and total hydrocarbons contained in the landfill gas, when the flare is operated at design flow with 30 to 60 percent landfill gas methane content. The locations of the wells and of the Flare-01 are shown in the site plan included in Figure 1.

Flare-01 uses the propane for the pilot flame and does not use auxiliary fuel. When sufficient LFG is present to support combustion, the pilot flame ignites the landfill gas. The ignited LFG destroys the methane (CH_4), non-methane organic compounds (NMOC), and volatile organic compounds (VOC) contained in the LFG. The proper operation of the flare may be verified on site by inspecting the historical data captured by the data acquisition system. The data acquisition system includes collection of LFG flow totals and temperature data. The presence of measured temperatures above ambient temperature during periods of LFG flow is sufficient to indicate the presence of a flame sufficient for combustion of the LFG. Proper operation of flares, unlike enclosed combustion devices, cannot be determined by establishing a minimum combustion temperature. This is because the center of the flame generated by the flare moves, while the thermocouple is stationary.

The flare and blowers are inspected and maintained quarterly. Flare-01 is designed for safe operation with the installation of a flame arrestor to prevent flashback.

2.1 Landfill Gas (LFG) Flow Rate to Flare

The landfill gas flow rate to Flare-01 is currently limited to 1,100 scfm on one-hour rolling average basis, in accordance with Section 3.1.1 of the construction permit (APC-2013/0106-Construction). The design LFG flow rate capacity of Flare-01 is 1,200 scfm, as shown in the technical data sheet that is part of the flare specification document. Table 1 shows the average monthly landfill gas flow rates, during the most recent 2-year period, are less than the 1,100 scfm limit.

Table 1: Average Monthly Landfill Gas Flow Rates

Month and Year	Flow (scf per month)	Days per Month	Average Monthly Flow (scfm)
September 2015	42,211,239	30	977
October 2015	44,596,314	31	999
November 2015	40,997,448	30	949
December 2015	45,047,501	31	**1009**
January 2016	36,539,008	31	819
February 2016	38,095,443	29	912
March 2016	40,246,002	31	902
April 2016	40,636,515	30	941
May 2016	40,857,294	31	915
June 2016	43,395,295	30	**1005**
July 2016	39,805,192	31	892
August 2016	31,784,835	31	712
September 2016	27,472,227	30	636
October 2016	24,755,718	31	555
November 2016	25,014,485	30	579
December 2016	39,683,998	31	889
January 2017	41,127,619	31	921
February 2017	38,473,355	29	954
March 2017	36,011,159	31	807
April 2017	39,976,189	30	925
May 2017	39,431,826	31	883
June 2017	33,067,199	30	765
July 2017	29,794,632	31	667
August 2017	30,984,221	31	694

Note: Flow (scf/minute) = Flow (scf/month) / (days/month) / (24 hours/day) / (60 minutes/hour)

2.2 Emission Limits

Table 2 summarizes the current emission limits, as stated in the existing air construction permit (APC-2013/0106-Construction).

Table 2: Permitted Flare Emission Limits

Pollutant	12-Month Rolling Total (tons)
Carbon monoxide (CO)	55.1
Oxides of nitrogen (NO_x)	10.12
Non-methane organic compounds (NMOC)	12.74
Volatile organic compounds (VOC)	10.19
Sulfur oxides (SO_x)	87.0

3.0 PROJECT DESCRIPTION

The DRPI Landfill is located about 3.7 miles north of New Castle in New Castle County (NCC), Delaware. New Castle County is a marginal non-attainment area for ozone (2008 8-hour average National Ambient Air Quality Standards [NAAQS; 40 CFR part 50] of 0.075 parts per million [ppm]) and a moderate non-attainment area for particulate matter less than 2.5 microns in diameter ($PM_{2.5}$) (2006 24-hour average NAAQS of 35 micrograms per cubic meter [ug/m^3]).

DRPI is proposing the following:

- Increase the permitted capacity of Flare-01 from 1,100 scfm to 1,200 scfm, which is the maximum design capacity according to the flare specifications; and
- Install a new candlestick type flare with a maximum design LFG flow rate of 1,350 scfm.

Due to the increase in the capacity of Flare-01 and the addition of a new flare, potential air emissions for the landfill are expecting to change.

3.1 Proposed Flare

The DRPI proposes to install a new open candlestick type (non-assisted) flare with a maximum design LFG flow rate of 1,350 scfm. The location of the proposed new is presented in Figure 1.

The proposed flare (ID Flare-02) will be provided by LFG Specialties, L.L.C (model CFT828I6) and the specifications are included in Appendix E. The flare specifications (see Appendix E) indicate a design destruction capability of at least 98% of the CH_4 and total hydrocarbons contained in the LFG, when the flare is operated at design flow with 30% to 50% CH_4 content[1].

Similar to the existing flare, the new flare will use a pilot ignition flame, fueled by propane and will not use auxiliary fuel. When sufficient LFG is present to support combustion, the pilot flame ignites the LFG. The ignited LFG destroys the CH_4, NMOCs, and volatile organic compounds (VOCs) contained in the LFG.

It is anticipated that the system will be fully automatic, with the flare programmed to run when sufficient CH_4 is present to support combustion. The operator will set the desired flow rate, either using an input set point that controls the blower variable-speed drive or manually by using a control valve. Shutdown / safety interlocks will be included to shut down the blower automatically if conditions are not within certain parameters (e.g., poor LFG quality, high temperature). An automatic shutoff valve will prevent raw LFG from being vented through the stack when the blower is shutdown. The system will transmit alarm notifications to personnel responsible for system operation.

[1] The flame is not sustainable at a CH_4 content below 30%; therefore, the system would shut-down when the CH_4 content is below 30%. A CH_4 content above 50% is not anticipated; however, if a CH_4 content above 50% was observed, then the flow rates from the LFG extraction wells could be adjusted to reduce the CH_4 content, if needed.

Technical specifications (see Appendix E) for the proposed new flare (ID Flare-02) are summarized below:

- Type: Candlestick
- LFG Composition: 30-50% Methane
- Capacity: 68-1,350 scfm
- Suction Vacuum: 60 inches of water column (in. w.c.) maximum
- Outlet Pressure: 12 in. w.c. minimum
- Stack Height: 28 feet minimum
- Destruction Efficiency: 98%

4.0 PROJECT EMISSIONS

Air pollutant emissions including criteria, hazardous, and greenhouse gas (GHG) emissions will be generated by the existing Flare-01 and the proposed Flare-02. DRPI is requesting a maximum total flaring capacity of 2,100 scfm. Since the existing Flare-01 has the maximum flaring capacity of 1,200 scfm, the project emissions assumed 900 scfm of LFG flared through Flare-02. Hourly and annual potential criteria and GHG emission rates for the existing Flare-01 and proposed Flare-02 are presented in Tables 3 and 4, respectively.

Carbon monoxide (CO) and nitrogen oxides (NO_x) emissions were estimated using emissions factors based on manufacturer emissions guarantee. Potential PM_{10} (particulate matter less than 10 microns in diameter) and $PM_{2.5}$ emissions were estimated using emission rates based on Chapter 2.4 (Municipal Solid Waste Landfills) of AP-42. VOC emissions were conservatively estimated based on an assumption that 39% of the NMOC emissions are VOCs. NMOC emissions for the open flare were estimated based on the concentration of 595 parts per million by volume, dry (ppmvd) as hexane showed in AP-42, Chapter 2.4., and using 98% which is the destruction efficiency of the flare, as provided by the manufacturer. The higher heating value (HHV) of the LFG based on historical data recorded during the period 2012-2016

Potential hazardous air pollutant (HAP) emissions for the existing open flare were estimated based on emission factors published in Chapter 2.4 of AP-42, and are presented in Tables 5 and 6 for the existing Flare-01 and proposed Flare-02, respectively. The potential GHG emissions (CH_4, N_2O and CO_2) were estimated based on emissions factors from Table C-1 and C-2 of Subpart C of 40 CFR Part 98, Mandatory Greenhouse Gas Reporting. Carbon dioxide equivalent (CO_2e) emissions rates were calculated using the following formula (USEPA 2013 Revisions to Part 98, 78 FR 71904; rule was effective on January 1, 2014):

$$CO_{2e} \text{ Rate} = CO_2 \text{ Rate} \times 1 + N_2O \text{ Rate} \times 298 + CH_4 \text{ Rate} \times 25$$

5.0 REGULATORY APPLICABILITY ANALYSIS

According to Section 2.0 of 7 DE Admin Code 1102, unless exempted from permitting, any equipment or facility or air contaminant control device which emits or prevents the emission of an air contaminant must obtain appropriate authorization from DNREC prior to construction, installation, alteration or initiation of operation. As a result, an air permit is required for the proposed increase in LFG flow rate to the existing Flare-01 and the installation of the proposed Flare-02.

Based on the emissions potential for the proposed flare (see Section 3.0 herein), the Site is not a major stationary source[2]. Actual emissions are defined in Section 1.9 of 7 DE Admin Code 1125 as the average rate, in tons per year, at which the unit actually emitted the pollutant during a two-year period which precedes the particular date and which is representative of normal source operation. In order to determine actual emissions from the DRPI Landfill, actual annual emissions for the period 2007 to 2016 were summarized, and maximum 2-year average emissions were calculated for each pollutant (see Table 7 for actual annual emissions and Table 8 for 2-year average emissions). Actual emissions would increase as a result of the capacity increase of the existing flare and operation of the proposed new flare.

Net emissions increase is defined in Section 1.9 of 7 DE Admin Code 1125 as any increase in actual emissions from a particular physical change or change in the method of operation at a stationary source. The net emission increases as a result of the proposed project are summarized in Table 9. The net increases were estimated after subtracting the 2-year average actual emissions from the future potential emissions (see Tables 3 and 4, respectively) of the two flares. As shown in Table 9, the net emissions increases are below the significant emissions rates (Section 1.9 of 7 DE Admin Code 1125) for all pollutants. However, the net increases for VOC, NO_X, and SO2 is more than 5 TPY; therefore, based on Section 4.1 of 7 DE Admin Code 1125, the proposed project is subject to minor new source review.

The following New Source Performance Standards (NSPS) apply to municipal solid waste (MSW) landfills that are constructed, reconstructed, or modified after May 30, 1991:

- 40 CFR 60 Subpart WWW – New Source Performance Standards for Municipal Solid Waste Landfills; and
- 40 CFR 60 Subpart Cc – Emissions Guidelines and Compliance Times for Municipal Solid Waste Landfills.

[2] In accordance with Section 2.2 of 7 DE Admin Code 1125, because NCC is a marginal non-attainment area for ozone, a "major stationary source" is defined as any stationary source of air pollutants which emits or has the potential to emit 50 tons per year (TPY) or more of VOCs or 100 TPY or more of NO_X. For $PM_{2.5}$, the major source emissions threshold is 100 TPY. For other pollutants regulated under the Clean Air Act, the major stationary source emissions threshold is 250 TPY (Section 3.1 of 7 DE Admin Code 1125).

The new NSPS 40 CFR 60 Subpart XXX applies to MSW landfills constructed, reconstructed, or modified after July 17, 2014. That said, the DRPI Landfill is permitted to accept only C&D waste, dry waste, and non-hazardous industrial waste solids and therefore, not subject to these NSPSs.

The applicability requirements for NSPS Subpart WWW and NSPS Subpart Cc are presented below:

NSPS Subpart WWW

§ 60.750 Applicability, designation of affected facility, and delegation of authority.

(a) The provisions of this subpart apply to each municipal solid waste landfill that commenced construction, reconstruction or modification on or after May 30, 1991. Physical or operational changes made to an existing MSW landfill solely to comply with subpart Cc of this part are not considered construction, reconstruction, or modification for the purposes of this section.

(b) The following authorities shall be retained by the Administrator and not transferred to the State: § 60.754(a)(5).

(c) Activities required by or conducted pursuant to a CERCLA, RCRA, or State remedial action are not considered construction, reconstruction, or modification for purposes of this subpart.

NSPS Subpart Cc

§60.32c Designated facilities.

(a) The designated facility to which the guidelines apply is each existing MSW landfill for which construction, reconstruction or modification was commenced before May 30, 1991.

(b) Physical or operational changes made to an existing MSW landfill solely to comply with an emission guideline are not considered a modification or reconstruction and would not subject an existing MSW landfill to the requirements of subpart WWW [see §60.750 of subpart WWW].

5.1 Proposed Change to Emissions Limits

The DRPI Landfill is currently subject to annual emissions limitations for CO, NO_X, NMOC, VOC, and SO_2 emissions. As shown in Table 9, the potential annual emissions for the two flares are below the current annual emissions limitations except for NO_X. As a result, DRPI is requesting an increase in the annual NO_X emissions from 10.12 tons per year to 12.4 tons per year.

Table 10 summarizes the existing and proposed emissions limits.

Table 10: Proposed Changes to Emission Limits

Pollutant	12-Month Rolling Total (tons)	
	Current Permit Limit	Proposed
Carbon monoxide (CO)	55.1	55.1 (no change)
Oxides of nitrogen (NO_x)	10.12	**12.4**
Non-methane organic compounds (NMOC)	12.74	12.74 (no change)
Volatile organic compounds (VOC)	10.19	10.19 (no change)
Sulfur oxides (SO_x)	87.0	87.0 (no change)

6.0 CONTROL TECHNOLOGY ASSESSMENT

Section 4.3.1 of 7 DE Admin Code 1125 requires that each pollutant emitted by more than 5 TPY be controlled by installing and operating emissions control technology approved by DNREC on the basis of effectiveness determined by either technical feasibility, environmental impacts, economic impacts, or energy impacts. NO_X and CO emissions from both flares are subject to the control technology assessment.

NO_X and CO emissions from open flares are products of combustion. NO_X is formed by the oxidation of nitrogen contained in the fuel (fuel NO_X), and by the combination of elemental nitrogen and oxygen in the high temperature-environment of the combustion zone (thermal NO_X). Essentially all NO_X emissions originate as NO, which subsequently oxidizes in the atmosphere to the more stable NO_2 molecule. Factors affecting the generation of NO_X include flame temperature, residence time, quantity of excess air, and nitrogen content of the fuel. CO emissions are a result of incomplete thermal oxidation of carbon contained within the fuel.

As part of the control technology analysis, a review was performed of previous best available control technology (BACT) determinations within the last 10 years (i.e., since 2006) for NO_X and CO emissions from open flares listed in the Reasonably Available Control Technology (RACT)/BACT/Lowest Achievable Emission Rate (LAER) Clearinghouse (RBLC) on the USEPA's web site. The RBLC lists only a few open flare BACT determinations and all are based on good combustion practices and proper maintenance of the flare.

6.1 Step 1 – Identification of Potentially Applicable Control Technologies

The analysis was performed based on those available and feasible control technologies that can provide the maximum degree of emission reduction for NO_X, and CO emissions. Formation of thermal NO_X depends on the combustion temperature and becomes rapid above 1,400 degrees Celsius (°C; 2,550°F). The important parameters in thermal NO_X formation are combustion temperature and local stoichiometric ratio of fuel and air. Fuel-bound NO_X is formed by the nitrogen in the fuel that reacts with the combustion air; therefore, it depends on the nitrogen content of fuel.

High levels of CO emissions could result from poor burner design or sub-optimal firing conditions. Carbon in the fuel which does not experience the required temperature or residence time at the required temperature will form CO or other organic compounds instead of being fully oxidized into CO_2. Similar to NO_X, the important parameters in CO formation are combustion temperature and local stoichiometric ratio of fuel and air (i.e., mixing of fuel and air).

The primary methods to reduce NO_X and CO emissions are through either combustion process controls or through add-on control devices that work on the principle of catalytic or non-catalytic reactions.

6.1.1 Combustion Controls

Combustion controls are the primary engineering choice in reducing NO_X and CO emissions from open combustion sources like the open flare. Combustion controls for flares include control of the combustion temperature by proper mixing of air and fuel in the combustion zone. CO emissions can be reduced by increasing the combustion temperatures and increasing the air to fuel ratio. However, NO_X emissions generally increase with higher combustion temperature; therefore, a well-balanced burner design that promotes proper mixing of air and fuel is important in reducing both NO_X and CO emissions from open combustion sources.

6.1.2 Add-On Controls

Post combustion add-on controls such as selective catalytic reduction (SCR), regenerative SCR, selective non-catalytic reduction (SNCR), etc. are add-on control devices that can reduce the concentration of NO_X in the exhaust gas after the combustion process is complete. Similarly, oxidation catalyst systems can reduce CO emissions from the exhaust gas. However, these technologies can only be applied if the combustion gas can be captured and routed through these devices. Combustion gases from open flares are not captured. Based on a review of the USEPA's AP-42, Section 2.4, MSW Landfills, the RBLC database, and other recent permits and permit applications, no available add-on controls for NO_X, and CO were identified for open flares.

6.2 Step 2 – Evaluation of Technically Feasible Control Alternatives

As discussed above, good combustion practices is most effective in minimizing NO_X and CO emissions from open combustion sources like a flare. Good combustion practices have been applied successfully to open flares and is the only technically feasible control option for the above-mentioned pollutants.

6.3 Step 3 – Ranking of Technically Feasible Control Alternatives

Because good combustion practices are the only feasible control technology, a ranking of control technologies is not required.

6.4 Step 4 – Evaluation of Economic, Environmental, and Energy Impacts of Feasible Technologies

6.4.1 Energy Impacts

Good combustion practices for open flares, which include ensuring proper mixing of air and fuel in the combustion zone, are not expected to create any negative energy impacts.

6.4.2 Environmental Impacts

Proper maintenance or good combustion practices are not expected to create any negative environmental impacts.

6.4.3 Economic Impacts

The above control options are standard practices for flare operation and are not expected to create any adverse economic impacts.

6.5 Step 5 – Selection of Control Technology

Based on the preceding analysis, DRPI proposes good combustion practices and proper maintenance of the proposed flare (Flare-02) for the control of NO_X and CO emissions, and Flare-02 will destruct other pollutants such as VOCs and NMOCs by 98% or more.

7.0 CLOSURE

Golder is pleased to have had the opportunity to prepare this air permit application for DRPI in connection with the DRPI Landfill located in New Castle, Delaware. If you have any questions concerning this permit application, please feel free to contact Paul A. Whitty, PE of Golder at (215) 826-1560 (ext. 60006) or email him at Paul_Whitty@golder.com.

GOLDER ASSOCIATES INC.

Paul A. Whitty, PE
Senior Consultant
Delaware PE No. 13809

Salahuddin Mohammad, PE
Senior Engineer

8.0 REFERENCES

Fors, 2017. Email communication from Jeffrey Fors of Waste Management to Paul Whitty and Sal Mohammad of Golder dated September 22, 2017. Subject is actual emissions and 12-month rolling total workbook.

Fors, 2017. Email communication from Dan Bergan of Waste Management to Paul Whitty and Sal Mohammad of Golder dated September 29, 2017. Subject is proposed flare specifications.

At Golder Associates we strive to be the most respected global group of companies specializing in ground engineering and environmental services. Employee owned since our formation in 1960, we have created a unique culture with pride in ownership, resulting in long-term organizational stability. Golder professionals take the time to build an understanding of client needs and of the specific environments in which they operate. We continue to expand our technical capabilities and have experienced steady growth with employees now operating from offices located throughout Africa, Asia, Australasia, Europe, North America and South America.

Africa	+ 27 11 254 4800
Asia	+ 852 2562 3658
Australasia	+ 61 3 8862 3500
Europe	+ 356 21 42 30 20
North America	+ 1 800 275 3281
South America	+ 55 21 3095 9500

solutions@golder.com
www.golder.com

Golder Associates Inc.
10 Canal Street, Suite 217
Bristol, PA 19007 USA
Tel: (215) 826-1560
Fax: (215) 826-9458

Golder Associates

Golder, Golder Associates and the GA globe design are trademarks of Golder Associates Corporation

FIGURES

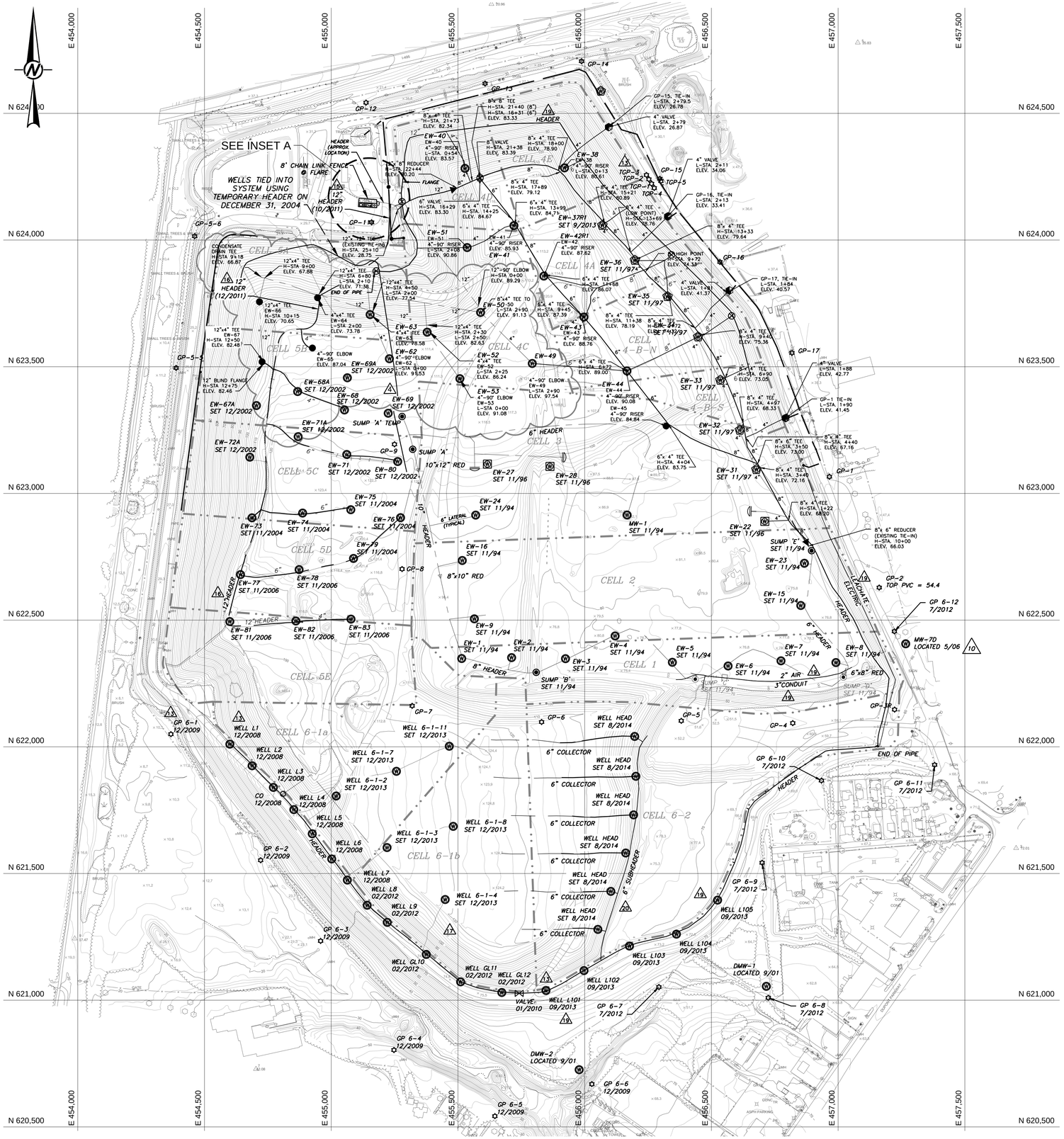

LEGEND

EW-24 (W)	EXISTING GAS WELL
EW-62 (W)	EXISTING DECOMMISSIONED GAS WELL
6-1-3	EXISTING GAS WELL (REFERENCE 3)
110	EXISTING MAJOR CONTOUR
	EXISTING MINOR CONTOUR
6"	EXISTING GAS HEADER

REFERENCE(S)

1. EXISTING GAS SYSTEM AS-BUILT INFORMATION PROVIDED IN CADD FILE NO. "33826-L", REVISION 21 BY VANDEMARK & LYNCH, INC., DATED JANUARY 13, 2016.
2. AERIAL TOPOGRAPHY PROVIDED BY QUANTUM SPATIAL, DULLES, VIRGINIA, DATED DECEMBER 29, 2016.
3. COORDINATE SYSTEM REFERENCED TO NAD27 OF THE DELAWARE STATE PLANE ZONE AND VERTICAL DATUM BASED ON NGVD29.

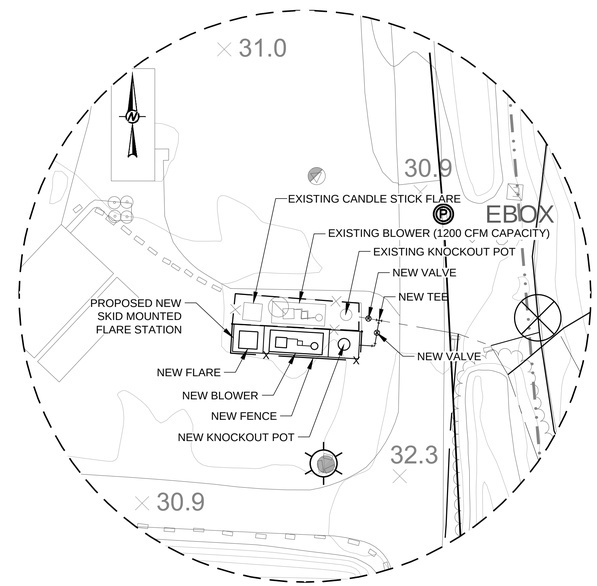

INSET A
SCALE: 1" = 40'

DRAFT

0 200 400
1" = 200' FEET

SEAL

REV.	YYYY-MM-DD	DESCRIPTION	DESIGNED	PREPARED	REVIEWED	APPROVED
0	2017-10-12	DESCRIPTION	PAW	GLS		

CLIENT
WASTE MANAGEMENT
DELAWARE RECYCLABLE PRODUCTS, INC.
NEW CASTLE, DELAWARE

CONSULTANT
BRISTOL
10 CANAL STREET, SUITE 2017
BRISTOL, PENNSYLVANIA 19007
USA
215-826-1560
www.golder.com
Golder Associates

PROJECT
2017 FLARE PERMITTING

TITLE
SITE PLAN

PROJECT NO.
1785703

CONTROL
A001

REV.
0

of

DRAWING
A-01

IF THIS MEASUREMENT DOES NOT MATCH WHAT IS SHOWN, THE SHEET SIZE HAS BEEN MODIFIED FROM: ANSI D
1 in
0

Path: \\bristol\data\Projects\2017\1785703 - DRPI 2017 Flare Permitting\CADD\PRODUCTION\A - DRPI 2017 Flare Permitting\ | File Name: 1785703A001.dwg | Last Edited By: gsantell Date: 2017-10-11 Time:3:23:25 PM | Printed By: gsantell Date: 2017-10-12 Time:10:12:47 AM

TABLES

TABLE 3
Potential Emissions from Existing 1,200 scfm open flare (Model PCF822I6) - Flare01
Delaware Recyclable Products, Inc., New Castle, DE

Pollutants	Emission Factor	Ref.	Activity Factor: LFG Flow (scfm)	LFG Heating Value (Btu/scf)[a]	LFG Methane Content (%)[a]	Heat Input (MMBtu/hr)	Operating Hours	Potential Emissions: (lb/hr)	(TPY)	(lb/scf)
Carbon Monoxide (CO)	0.37 lb/MMBtu	b	1,200	330	33	23.8	8,760	8.8	38.6	1.22E-04
Nitrogen Oxides (NOx)	0.068 lb/MMBtu	b	1,200	330	33	23.8	8,760	1.62	7.1	2.25E-05
Particulate Matter (PM)	0.000015 lb/scf CH_4	c	1,200	330	33	23.8	8,760	0.36	1.6	4.95E-06
Particulate Matter (PM_{10})	0.000015 lb/scf CH_4	c	1,200	330	33	23.8	8,760	0.36	1.6	4.95E-06
Particulate Matter ($PM_{2.5}$)	0.000015 lb/scf CH_4	c	1,200	330	33	23.8	8,760	0.36	1.6	4.95E-06
Non-Methane Organic Compounds (NMOC)	595 ppmv	d	1,200	330	33	23.8	8,760	0.19	0.9	2.70E-06
Volatile Organic Compounds (VOC)	39% of NMOC	e	1,200	330	33	23.8	8,760	0.08	0.3	1.05E-06
Sulfur Dioxide (SO_2)	816 ppmv, S	f	1,200	330	33	23.8	8,760	9.91	43.4	1.38E-04
Greenhouse gases (GHG) Emissions										
Carbon dioxide (CO_2)	52.07 kg/MMBtu	g	1,200	330	33	23.8	8,760	2,763	12,104	3.84E-02
Methane (CH_4)	6.30E-03 kg/MMBtu	g	1,200	330	33	23.8	8,760	0.33	1.46	4.64E-06
Nitrous Oxide (N_2O)	3.20E-03 kg/MMBtu	g	1,200	330	33	23.8	8,760	0.17	0.74	2.36E-06
Carbon dioxide equivalent (CO_2e)	- -	-	-	-	-	-	-	2,764	12,141 [h]	-

[a] LFG heating value and methane content (HHV) based on historical data for the period 2012-2016.
[b] Based on manufacturer emissions guarantee.
[c] Based on AP-42, Chapter 2.4 (October, 2008), Table 2.4-5. PM and $PM_{2.5}$ emissions are assumed to be equal to estimated PM_{10} emissions.
[d] NMOC emission rate is based on EPA recommended concentration of 595 ppmv per AP-42 Section 2.4 as well as 98% flare destruction efficiency per manufacturer info.
NMOC emissions calculated as following:

LFG NMOC concentration =	595	ppmv as hexane, AP-42 Section 2.4.
LFG gas flow into flare =	1,200	scfm, design LFG flow.
Standard Temperature =	60	°F
Molecular weight of NMOC as hexane =	86.18	lb/lb-mol (AP-42 table 2.4-1)
Uncontrolled NMOC emissions (lb/hr) =	9.72	lb/hr, NMOC (ppmv actual) x Volume flow (acfm) x 86.18 (MW of NMOC) x 2116.2 lb/ft2 (pressure) / [1545.4 (gas constant, R) x Actual Temp. (°R)] x 60 min/hr
Flare destruction efficiency =	98.0	%, based on manufacturer guarantee
Controlled NMOC emissions (lb/hr) =	0.19	lb/hr, Uncontrolled emissions x (1 - destruction efficiency/100)

[e] 39% of NMOC assumed as VOC. (AP-42 Section 2.4)

LFG VOC concentration =	232	ppmv as hexane, AP-42 Section 2.4
Uncontrolled VOC emissions (lb/hr) =	3.79	VOC (ppmv actual) x Volume flow (acfm) x 86.18 (MW of NMOC) x 2116.2 lb/ft2 (pressure) / [1545.4 (gas constant, R) x Actual Temp. (°R)] x 60 min/hr
Controlled VOC emissions (lb/hr) =	0.08	

[f] SO_2 emission rate is based on H_2S concentration in LFG and design LFG flow rate into the flare.

LFG H_2S concentration =	816	ppmv, based on the max value of 2016
LFG gas flow into flare =	1,200	scfm, design LFG flow.
Standard Temperature =	60	°F
SO_2 emissions (lb/hr) =	9.91	lb/hr, H_2S (ppmv) x (1/1,000,000) x Volume flow (scfm) x 34.08 (MW) x 2116.2 lb/ft2 x 60 min/hr x MW of SO2/MW of H2S / [1545.4 (gas constant, R) x Actual Temp. (°R)]

[g] 40 CFR Part 98 Table C-1 and C-2 to Subpart C of Part 98—Default CO2 Emission Factors and High Heat Values for Landfill Gas
[h] Carbon dioxide equivalent (CO2e), TPY emissions calculation = CO_2 +25*CH_4+298*N_2O

TABLE 4
Potential Emissions from Proposed 900 scfm open flare (Model CFT828I6) - Flare02
Delaware Recyclable Products, Inc., New Castle, DE

			Activity Factor					Potential Emissions		
Pollutants	Emission Factor	Ref.	LFG Flow (scfm)	LFG Heating Value (Btu/scf)[a]	LFG Methane Content (%)[a]	Heat Input (MMBtu/hr)	Operating Hours	(lb/hr)	(TPY)	(lb/scf)
Carbon Monoxide (CO)	0.37 lb/MMBtu	b	900	330	33	17.8	8,760	6.6	28.9	1.22E-04
Nitrogen Oxides (NOx)	0.068 lb/MMBtu	b	900	330	33	17.8	8,760	1.21	5.3	2.25E-05
Particulate Matter (PM)	0.000015 lb/scf CH_4	c	900	330	33	17.8	8,760	0.27	1.2	4.95E-06
Particulate Matter (PM_{10})	0.000015 lb/scf CH_4	c	900	330	33	17.8	8,760	0.27	1.2	4.95E-06
Particulate Matter ($PM_{2.5}$)	0.000015 lb/scf CH_4	c	900	330	33	17.8	8,760	0.27	1.2	4.95E-06
Non-Methane Organic Compounds (NMOC)	595 ppmv	d	900	330	33	17.8	8,760	0.15	0.6	2.70E-06
Volatile Organic Compounds (VOC)	39% of NMOC	e	900	330	33	17.8	8,760	0.06	0.2	1.05E-06
Sulfur Dioxide (SO_2)	816 ppmv, S	f	900	330	33	17.8	8,760	7.43	32.5	1.38E-04
Greenhouse gases (GHG) Emissions										
Carbon dioxide (CO_2)	52.07 kg/MMBtu	g	900	330	33	17.8	8,760	2,073	9,078	3.84E-02
Methane (CH_4)	6.30E-03 kg/MMBtu	g	900	330	33	17.8	8,760	0.25	1.10	4.64E-06
Nitrous Oxide (N_2O)	3.20E-03 kg/MMBtu	g	900	330	33	17.8	8,760	0.13	0.56	2.36E-06
Carbon dioxide equivalent (CO_2e)	- -	-	-	-	-	-	-	2,073	9,105 [h]	-

[a] LFG heating value and methane content (HHV) based on historical data for the period 2012-2016.
[b] Based on manufacturer emissions guarantee.
[c] Based on AP-42, Chapter 2.4 (October, 2008), Table 2.4-5. PM and $PM_{2.5}$ emissions are assumed to be equal to estimated PM_{10} emissions.
[d] NMOC emission rate is based on EPA recommended concentration of 595 ppmv per AP-42 Section 2.4 as well as 98% flare destruction efficiency per manufacturer info.
NMOC emissions calculated as following:

LFG NMOC concentration = 595 ppmv as hexane, AP-42 Section 2.4.
LFG gas flow into flare = 900 scfm, design LFG flow.
Standard Temperature = 60 °F
Molecular weight of NMOC as hexane = 86.18 lb/lb-mol (AP-42 table 2.4-1)
Uncontrolled NMOC emissions (lb/hr) = 7.29 lb/hr, NMOC (ppmv actual) x Volume flow (acfm) x 86.18 (MW of NMOC) x 2116.2 lb/ft2 (pressure) / [1545.4 (gas constant, R) x Actual Temp. (°R)] x 60 min/hr
Flare destruction efficiency = 98.0 %, based on manufacturer guarantee
Controlled NMOC emissions (lb/hr) = 0.15 lb/hr, Uncontrolled emissions x (1 - destruction efficiency/100)

[e] 39% of NMOC assumed as VOC. (AP-42 Section 2.4)
LFG VOC concentration = 232 ppmv as hexane, AP-42 Section 2.4
Uncontrolled VOC emissions (lb/hr) = 2.84 VOC (ppmv actual) x Volume flow (acfm) x 86.18 (MW of NMOC) x 2116.2 lb/ft2 (pressure) / [1545.4 (gas constant, R) x Actual Temp. (°R)] x 60 min/hr
Controlled VOC emissions (lb/hr) = 0.06

[f] SO_2 emission rate is based on H_2S concentration in LFG and design LFG flow rate into the flare.
LFG H_2S concentration = 816 ppmv, based on the max value of 2016
LFG gas flow into flare = 900 scfm, design LFG flow.
Standard Temperature = 60 °F
SO_2 emissions (lb/hr) = 7.43 lb/hr, H_2S (ppmv) x (1/1,000,000) x Volume flow (scfm) x 34.08 (MW) x 2116.2 lb/ft2 x 60 min/hr x MW of SO2/MW of H2S / [1545.4 (gas constant, R) x Actual Temp. (°R)]
[g] 40 CFR Part 98 Table C-1 and C-2 to Subpart C of Part 98—Default CO2 Emission Factors and High Heat Values for Landfill Gas
[h] Carbon dioxide equivalent (CO2e), TPY emissions calculation = CO_2 +25*CH_4+298*N_2O

Table 5
Potential Hazardous Air Pollutant Emissions from Existing 1,200 scfm open flare (Model PCF822I6) - Flare01
Delaware Recylcable Products, Inc., New Castle, DE

			Activity Factor[a]				Flare	Potential Emissions[d]			
Hazardous Air Pollutants	Molecular Weight[b]	Concentration in LFG[b]	LFG Flow (scfm)	LFG Heating Value (Btu/scf)	Heat Input (MMBtu/hr)	Operating Hours	Destruction Efficiency[c] (%)	Uncontrolled Emissions (lb/hr)	Controlled Emissions (lb/hr)	(lb/scf)	(TPY)
1,1,1-Trichloroethane	133.4	0.48 ppmv	1,200	330	23.8	8,760	98	1.21E-02	2.4E-04	3.4E-09	1.1E-03
1,1,2,2-Tetrachloroethane	167.9	1.11 ppmv	1,200	330	23.8	8,760	98	3.53E-02	7.1E-04	9.8E-09	3.1E-03
1,1-Dichloroethane	99.0	2.35 ppmv	1,200	330	23.8	8,760	98	4.41E-02	8.8E-04	1.2E-08	3.9E-03
1,1-Dichloroethene	96.9	0.20 ppmv	1,200	330	23.8	8,760	98	3.68E-03	7.4E-05	1.0E-09	3.2E-04
1,2-Dichloroethane	99.0	0.41 ppmv	1,200	330	23.8	8,760	98	7.69E-03	1.5E-04	2.1E-09	6.7E-04
1,2-Dichloropropane	113.0	0.18 ppmv	1,200	330	23.8	8,760	98	3.86E-03	7.7E-05	1.1E-09	3.4E-04
Acrylonitrile	113.0	6.33 ppmv	1,200	330	23.8	8,760	98	1.36E-01	2.7E-03	3.8E-08	1.2E-02
Benzene (no co-disposal)	78.1	0.97 ppmv	1,200	330	23.8	8,760	98	1.44E-02	2.9E-04	4.0E-09	1.3E-03
Carbon Disulfide	76.1	0.58 ppmv	1,200	330	23.8	8,760	98	8.37E-03	1.7E-04	2.3E-09	7.3E-04
Carbon Tetrachloride	153.8	0.00 ppmv	1,200	330	23.8	8,760	98	1.17E-04	2.3E-06	3.2E-11	1.0E-05
Carbonyl Sulfide	60.1	0.49 ppmv	1,200	330	23.8	8,760	98	5.58E-03	1.1E-04	1.6E-09	4.9E-04
Chlorobenzene	112.6	0.25 ppmv	1,200	330	23.8	8,760	98	5.34E-03	1.1E-04	1.5E-09	4.7E-04
Chloroethane	64.5	1.25 ppmv	1,200	330	23.8	8,760	98	1.53E-02	3.1E-04	4.2E-09	1.3E-03
Chloroform	119.4	0.03 ppmv	1,200	330	23.8	8,760	98	6.79E-04	1.4E-05	1.9E-10	5.9E-05
Chloromethane	50.5	1.21 ppmv	1,200	330	23.8	8,760	98	1.16E-02	2.3E-04	3.2E-09	1.0E-03
Dichloromethane	84.9	14.30 ppmv	1,200	330	23.8	8,760	98	2.30E-01	4.6E-03	6.4E-08	2.0E-02
Ethylbenzene	112.6	4.61 ppmv	1,200	330	23.8	8,760	98	9.84E-02	2.0E-03	2.7E-08	8.6E-03
Hexane	86.2	6.57 ppmv	1,200	330	23.8	8,760	98	1.07E-01	2.1E-03	3.0E-08	9.4E-03
Mercury	200.6	0.00029 ppmv	1,200	330	23.8	8,760	98	1.11E-05	2.2E-07	3.1E-12	9.7E-07
Methyl Ethyl Ketone	72.1	7.09 ppmv	1,200	330	23.8	8,760	98	9.69E-02	1.9E-03	2.7E-08	8.5E-03
Methyl Isobutyl Ketone	100.2	1.87 ppmv	1,200	330	23.8	8,760	98	3.55E-02	7.1E-04	9.9E-09	3.1E-03
Perchloroethylene	165.8	3.73 ppmv	1,200	330	23.8	8,760	98	1.17E-01	2.3E-03	3.3E-08	1.0E-02
Toluene	92.1	39.30 ppmv	1,200	330	23.8	8,760	98	6.86E-01	1.4E-02	1.9E-07	6.0E-02
Trichloroethylene	131.4	2.82 ppmv	1,200	330	23.8	8,760	98	7.03E-02	1.4E-03	2.0E-08	6.2E-03
Vinyl Chloride	62.5	7.34 ppmv	1,200	330	23.8	8,760	98	8.70E-02	1.7E-03	2.4E-08	7.6E-03
Xylene	106.2	12.10 ppmv	1,200	330	23.8	8,760	98	2.44E-01	4.9E-03	6.8E-08	2.1E-02
							Total =	2.08	0.042	5.8E-07	0.18

[a] Activity factors are based on LFG flow of 1,200 scfm to the enclosed flare and LFG heating value of 330 Btu/scf, HHV.

[b] Based on information provided in AP-42 Chapter 2.4, Table 2.4-1.

[c] Flare destruction efficiency based on manufacturer information (LFG Specialties, L.L.C.)

[d] Emission rates are based on pollutant concentration in LFG and design LFG flow rate into the flare. Example calculation presented below:

LFG Toluene concentration =	39.3	ppmv, based on AP-42 Chapter 2.4.
LFG gas flow into flare =	1,200	scfm, design LFG flow.
Standard Temperature =	60	°F
Molecular weight of Toluene =	92.1	lb/lb-mol (AP-42 table 2.4-1)
Uncontrolled Toluene emissions =	0.7	lb/hr, H_2S (ppmv actual) x Volume flow (scfm) x 92.1 (MW of Toluene) x 2116.2 lb/ft^2 (pressure) / [1545.4 (gas constant, R) x Actual Temp. (°R)] x 60 min/hr
Flare destruction efficiency =	98.0	%, based on manufacturer info.
Controlled Toluene emissions =	0.014	lb/hr, Controlled emissions x (1 - destruction efficiency/100)

Table 6
Potential Hazardous Air Pollutant Emissions from Proposed 900 scfm open flare (Model CFT828I6) - Flare02
Delaware Recylcable Products, Inc., New Castle, DE

			Activity Factor[a]				Flare	Potential Emissions[d]			
Hazardous Air Pollutants	Molecular Weight[b]	Concentration in LFG[b]	LFG Flow (scfm)	LFG Heating Value (Btu/scf)	Heat Input (MMBtu/hr)	Operating Hours	Destruction Efficiency[c] (%)	Uncontrolled Emissions (lb/hr)	Controlled Emissions (lb/hr)	(lb/scf)	(TPY)
1,1,1-Trichloroethane	133.4	0.48 ppmv	900	330	17.8	8,760	98	9.11E-03	1.8E-04	3.4E-09	8.0E-04
1,1,2,2-Tetrachloroethane	167.9	1.11 ppmv	900	330	17.8	8,760	98	2.65E-02	5.3E-04	9.8E-09	2.3E-03
1,1-Dichloroethane	99.0	2.35 ppmv	900	330	17.8	8,760	98	3.31E-02	6.6E-04	1.2E-08	2.9E-03
1,1-Dichloroethene	96.9	0.20 ppmv	900	330	17.8	8,760	98	2.76E-03	5.5E-05	1.0E-09	2.4E-04
1,2-Dichloroethane	99.0	0.41 ppmv	900	330	17.8	8,760	98	5.77E-03	1.2E-04	2.1E-09	5.1E-04
1,2-Dichloropropane	113.0	0.18 ppmv	900	330	17.8	8,760	98	2.89E-03	5.8E-05	1.1E-09	2.5E-04
Acrylonitrile	113.0	6.33 ppmv	900	330	17.8	8,760	98	1.02E-01	2.0E-03	3.8E-08	8.9E-03
Benzene (no co-disposal)	78.1	0.97 ppmv	900	330	17.8	8,760	98	1.08E-02	2.2E-04	4.0E-09	9.5E-04
Carbon Disulfide	76.1	0.58 ppmv	900	330	17.8	8,760	98	6.28E-03	1.3E-04	2.3E-09	5.5E-04
Carbon Tetrachloride	153.8	0.00 ppmv	900	330	17.8	8,760	98	8.75E-05	1.8E-06	3.2E-11	7.7E-06
Carbonyl Sulfide	60.1	0.49 ppmv	900	330	17.8	8,760	98	4.19E-03	8.4E-05	1.6E-09	3.7E-04
Chlorobenzene	112.6	0.25 ppmv	900	330	17.8	8,760	98	4.00E-03	8.0E-05	1.5E-09	3.5E-04
Chloroethane	64.5	1.25 ppmv	900	330	17.8	8,760	98	1.15E-02	2.3E-04	4.2E-09	1.0E-03
Chloroform	119.4	0.03 ppmv	900	330	17.8	8,760	98	5.09E-04	1.0E-05	1.9E-10	4.5E-05
Chloromethane	50.5	1.21 ppmv	900	330	17.8	8,760	98	8.69E-03	1.7E-04	3.2E-09	7.6E-04
Dichloromethane	84.9	14.30 ppmv	900	330	17.8	8,760	98	1.73E-01	3.5E-03	6.4E-08	1.5E-02
Ethylbenzene	112.6	4.61 ppmv	900	330	17.8	8,760	98	7.38E-02	1.5E-03	2.7E-08	6.5E-03
Hexane	86.2	6.57 ppmv	900	330	17.8	8,760	98	8.05E-02	1.6E-03	3.0E-08	7.1E-03
Mercury	200.6	0.00029 ppmv	900	330	17.8	8,760	98	8.33E-06	1.7E-07	3.1E-12	7.3E-07
Methyl Ethyl Ketone	72.1	7.09 ppmv	900	330	17.8	8,760	98	7.27E-02	1.5E-03	2.7E-08	6.4E-03
Methyl Isobutyl Ketone	100.2	1.87 ppmv	900	330	17.8	8,760	98	2.66E-02	5.3E-04	9.9E-09	2.3E-03
Perchloroethylene	165.8	3.73 ppmv	900	330	17.8	8,760	98	8.80E-02	1.8E-03	3.3E-08	7.7E-03
Toluene	92.1	39.30 ppmv	900	330	17.8	8,760	98	5.15E-01	1.0E-02	1.9E-07	4.5E-02
Trichloroethylene	131.4	2.82 ppmv	900	330	17.8	8,760	98	5.27E-02	1.1E-03	2.0E-08	4.6E-03
Vinyl Chloride	62.5	7.34 ppmv	900	330	17.8	8,760	98	6.52E-02	1.3E-03	2.4E-08	5.7E-03
Xylene	106.2	12.10 ppmv	900	330	17.8	8,760	98	1.83E-01	3.7E-03	6.8E-08	1.6E-02
							Total =	1.56	0.031	5.8E-07	0.14

[a] Activity factors are based on LFG flow of 1,200 scfm to the enclosed flare and LFG heating value of 330 Btu/scf, HHV.

[b] Based on information provided in AP-42 Chapter 2.4, Table 2.4-1.

[c] Flare destruction efficiency based on manufacturer information (LFG Specialties, L.L.C.)

[d] Emission rates are based on pollutant concentration in LFG and design LFG flow rate into the flare. Example calculation presented below:

LFG Toluene concentration =	39.3	ppmv, based on AP-42 Chapter 2.4.
LFG gas flow into flare =	900	scfm, design LFG flow.
Standard Temperature =	60	°F
Molecular weight of Toluene =	92.1	lb/lb-mol (AP-42 table 2.4-1)
Uncontrolled Toluene emissions =	0.5	lb/hr, H_2S (ppmv actual) x Volume flow (scfm) x 92.1 (MW of Toluene) x 2116.2 lb/ft^2 (pressure) / [1545.4 (gas constant, R) x Actual Temp. (°R)] x 60 min/hr
Flare destruction efficiency =	98.0	%, based on manufacturer info.
Controlled Toluene emissions =	0.010	lb/hr, Controlled emissions x (1 - destruction efficiency/100)

Table 7
Actual Annual Emissions (2007 - 2016)
Delaware Recyclable Products, Inc., New Castle, DE

Data Source	Annual Activity Factor [a] (scf/yr)	Actual Annual Emissions (TPY) [a]						
		CO	NO_X	PM	PM_{10}	SO_2	VOC	NMOC
2007	199,200,774	20.27	3.73	0.75	0.75	51.69	0.10	0.27
2008	197,281,000	11.62	2.14	0.46	0.46	23.93	0.10	0.27
2009	161,835,068	10.09	1.85	0.41	0.41	33.78	0.09	0.22
2010	201,766,677	13.16	2.42	0.53	0.53	12.43	0.11	0.27
2011	211,204,522	12.60	2.32	0.51	0.51	5.07	0.11	0.28
2012	270,786,000	17.06	3.13	0.68	0.68	23.98	0.14	0.36
2013	390,878,000	24.43	4.49	0.98	0.98	23.36	0.21	0.53
2014	475,090,416	48.34	8.88	1.20	1.20	45.56	0.25	0.64
2015	482,700,860	28.53	5.24	1.14	1.14	26.80	0.25	0.65
2016	428,286,012	25.31	4.65	1.01	1.01	23.67	0.25	0.58

[a] Based on 12-month rolling emissions data from DRPI.

Table 8
Actual Annual Emissions, Highest 2-Year Average (2007 - 2016)
Delaware Recyclable Products, Inc., New Castle, DE

Data Source	Annual Activity Factor	2-Year Average Annual Emissions (TPY)						
	(Scf/yr)	CO	NO_X	PM	PM_{10}	SO_2	VOC	NMOC
2007 - 2008 Average	198,240,887	15.9	2.93	0.60	0.60	37.8	0.10	0.27
2008 - 2009 Average	179,558,034	10.9	2.00	0.44	0.44	28.9	0.09	0.24
2009 - 2010 Average	181,800,873	11.6	2.14	0.47	0.47	23.1	0.10	0.25
2010 - 2011 Average	206,485,600	12.9	2.37	0.52	0.52	8.8	0.11	0.28
2011 - 2012 Average	240,995,261	14.8	2.73	0.59	0.59	14.5	0.13	0.32
2012 - 2013 Average	330,832,000	20.7	3.81	0.83	0.83	23.7	0.17	0.45
2013 - 2014 Average	432,984,208	36.4	6.69	1.09	1.09	34.5	0.23	0.58
2014 - 2015 Average	478,895,638	38.4	7.06	1.17	1.17	36.2	0.25	0.65
2015 - 2016 Average	455,493,436	26.9	4.95	1.08	1.08	25.2	0.25	0.61
Highest Consecutive 2-Year Average	478,895,638	38.4	7.1	1.2	1.2	37.8	0.3	0.6
Period	**2014-2015**	**2013-2014**	**2013-2014**	**2014-2015**	**2014-2015**	**2007-2008**	**2014-2015 & 2015-2016**	**2014-2015**

Table 9
Major Source Applicability Analysis
Delaware Recyclable Products, Inc., New Castle, DE

Emission Source	Pollutant Emission Rate (TPY)						
	CO	NO_X	PM	PM_{10}	$PM_{2.5}$	SO_2	VOC
Future Potential Emissions [a]							
Flare #1 (1200 scfm)	38.6	7.1	1.6	1.6	1.6	43.4	0.3
Flare #2 (900 scfm)	28.9	5.3	1.2	1.2	1.2	32.5	0.2
Total	67.5	12.4	2.7	2.7	2.7	75.9	0.6
Baseline Actual Emissions [b]							
Max two-year average	38.4	7.1	1.2	1.2	1.2	37.8	0.3
Net Increase (Potential - Baseline)	29.0	5.3	1.6	1.6	1.6	38.1	0.3

Note: Baseline PM_{10} and $PM_{2.5}$ emissions assumed to be the same as baseline PM emissions.

[a] See Table 3 y 4 for Emissions Calculations of Flare-01 and Flare-02, respectively.

[b] See Table 2-3. Based on emissions estimated per recordkeeping requirements for Permit APC-2013/0106-Construction.
Max 2 years average for the period 2007-2016

Appendix A
Form AQM-1
Administrative Information

Administrative Information

One original and one copy of All Application Forms Should Be Mailed To:
Division of Air Quality
100 West Water Street, Suite 6A
Dover, DE 19904

All Checks Should Be Made Payable To:
State of Delaware

Company and Site Information

1.	Company Name: **Delaware Recyclable Products, Inc.**
2.	Company Mailing Address: **246 Marsh Lane** City: **New Castle** State: **Delaware** Zip Code: **19804**
3.	Site Name: **Delaware Recyclable Products, Inc. (DRPI) Landfill**
4.	Site Mailing Address: **Same as above** *(if different from above)* City: State: Zip Code:
5.	Physical Location of Site: **Same as above** *(if different from above)* City: State: Zip Code:
6.	Site Billing Address: **Same as above** *(if different from above)* City: State: Zip Code:
7.	Air Quality Management Facility ID Number: **1000300415**
8.	Site NAICS Code): **562212** *(list all that apply*
9.	Site SIC Code: **4953** *(list all that apply)*
10.	Site Location Coordinates: Latitude: 39 ° 42’ 52” Longitude: 75 ° 34’ 20”
11.	Is the Facility New or Existing? ☐ NEW ☒ EXISTING
If the Facility is an Existing Facility, Complete the Rest of Question 11. If Not, Proceed to Question 12.	
11.1.	Does the Facility Have Active Air Permits? ☒ YES ☐ NO
12.	Is this Application For New Equipment or a Modification to Existing Equipment? ☐ New Equipment ☒ Modification of Existing Equipment ☐ Other (Specify):
If the application is for the modification of existing equipment, complete the rest of Question 12. If not, proceed to Question 13.	

Company and Site Information

12.1.	Does the Equipment Have an Active Air Permit? ☒ YES ☐ NO
If the equipment has an active air permit, complete the rest of Question 12. If not, proceed to Question 13.	
12.2.	Permit Number of Existing Equipment: **APC-2013/0106**
13.	Status of Equipment Being Applied For: ☒ Natural Minor Source ☐ Synthetic Minor Source ☐ Major Source ☐ Federally Enforceable Restrictions
14.	Facility Status: ☐ Natural Minor Facility ☒ Synthetic Minor Facility ☐ Major Facility
If the facility is a Major Source, complete the rest of Question 14. If not, proceed to Question 15.	
14.1.	Responsible Official Name: **Christian Salamone**
14.2.	Responsible Official Title: **District Manager**

Contact Information

15.	Name of Owner or Facility Manager: **Christian Salamone**
16.	Title of Owner or Facility Manager: **District Manager**
17.	Permit Contact Name: **Christian Salamone**
18.	Permit Contact Title: **District Manager**
19.	Permit Contact Telephone Number: **(302) 468-8178**
20.	Permit Contact Fax Number: **(866) 659-1232**
21.	Permit Contact E-Mail Address: **csalamone@wm.com**
22.	Billing Contact Name: **same as above**
23.	Billing Contact Title: **same as above**
24.	Billing Contact Telephone Number: **same as above**
25.	Billing Contact Fax Number: **same as above**
26.	Billing Contact E-Mail Address: **same as above**

Proposed Construction and Operating Schedule

27.	When Will the Proposed Construction/Installation/Modification Occur: mm/dd/yyyy
28.	Proposed Operating Schedule: **24** hours/day **7** days/week **52** weeks/year
28.1.	Is There Any Additional Information Regarding the Operating Schedule? ☒ YES ☐ NO
If YES, complete the rest of Question 28. If NO, proceed to Question 29.	

Proposed Construction and Operating Schedule

28.2. Describe the Additional Information: **Business hours are 6:30 AM to 4:30 PM Monday through Friday**

Coastal Zone Information

29. Is the Facility Located in the Coastal Zone? ☐ YES ☒ NO

If the facility is located in the Coastal Zone complete the rest of Question 29. If not, proceed to Question 30.

29.1. Is a Coastal Zone Permit Required for Construction or Operation of the Source Being Applied for? ☐ YES ☐ NO

Attach a copy of the Coastal Zone Determination if it has not been previously submitted

If a Coastal Zone Permit is required complete the rest of Question 29. If not, proceed to Question 30.

29.2. Has a Coastal Zone Permit Been Issued? ☐ YES ☐ NO

Attach a copy of the Coastal Zone Permit if it has not been previously submitted

Local Zoning Information

30. Parcel Zoning: **See Figures 2-1 and 2-2**

Attach Proof of Local Zoning if it has not been previously submitted

Application Information

31. Is the Appropriate Application Fee Attached? ☒ YES ☐ NO

32. Is the Advertising Fee Attached? ☒ YES ☐ NO

For help determining your application and advertising fees see:
http://www.dnrec.state.de.us/DNREC2000/Library/Fees/DE%20Permit%20Fees.htm

Attach the appropriate fees. Note that your Application will not be considered complete if the appropriate fees are not included.

33. Is a Cover Letter Describing the Process Attached? ☒ YES ☐ NO

Attach a brief cover letter describing your Application.

If the Facility is a New Facility complete Question 34. If not, proceed to Question35.

34. Is a Copy of the Applicant Background Information Questionnaire on Record at the Department? ☐ YES ☐ NO

If NO, complete the rest of Question 34. If YES, process to Question 35.

34.1 Is a Copy of the Applicant Background Information Questionnaire Attached? ☐ YES ☐ NO

For a copy of the Applicant Background Information Questionnaire see
http://www.dnrec.delaware.gov/services/Documents/Chapter79Form.pdf

Attach a copy of the Applicant Background Information Questionnaire if applicable.

35. Check Which Application Forms are Attached:

Application Information

☒ AQM-1	☐ AQM-3.4	☐ AQM-3.9	☐ AQM-3.14	☐ AQM-4.4	☐ AQM-4.9	☐ AQM-6
☒ AQM-2	☐ AQM-3.5	☐ AQM-3.10	☐ AQM-3.15	☐ AQM-4.5	☐ AQM-4.10	
☐ AQM-3.1	☐ AQM-3.6	☐ AQM-3.11	☐ AQM-4.1	☐ AQM-4.6	☐ AQM-4.11	
☐ AQM-3.2	☐ AQM-3.7	☐ AQM-3.12	☐ AQM-4.2	☐ AQM-4.7	☐ AQM-4.12	
☐ AQM-3.3	☐ AQM-3.8	☐ AQM-3.13	☒ AQM-4.3	☐ AQM-4.8	☒ AQM-5	

36. Check Which Documents are Attached:

- ☐ Coastal Zone Determination
- ☐ Coastal Zone Permit
- ☐ Proof of Local Zoning
- ☒ Application Fee
- ☒ Advertising Fee
- ☐ Applicant Background Information Questionnaire
- ☐ Claim of Confidentiality
- ☒ Manufacturer Specification(s)
- ☐ Material Safety Data Sheets (MSDSs)
- ☒ Supporting Calculations
- ☒ Descriptive Cover Letter
- ☐ Other (Specify):

Confidentiality Information

37. Do You Consider Any of the Information Submitted With this Application Confidential? ☐ YES ☒ NO

For help on how to submit a confidentiality claim see http://regulations.delaware.gov/register/december2011/final/15%20DE%20Reg%20864%2012-01-11.htm

If a Claim of Confidentiality is made it MUST meet the requirements of Section 6 of DNREC's Freedom of Information ("FOIA") Regulation at the time the Application is submitted.

Signature Block

I, the undersigned, hereby certify under penalty of law that I have personally examined and am familiar with the information submitted in this document and all of its attachments as to the truth, accuracy, and completeness of this information. I certify based on information and belief formed after reasonable inquiry, the statements and information in this document are true, accurate, and complete. By signing this form, I certify that I have not changed, altered, or deleted any portions of this application. I acknowledge that I cannot commence construction, alteration, modification or initiate operation until I receive written approval (i.e. permit, registration, or exemption letter) from the Department. I acknowledge that I may be required to perform testing of the equipment to receive construction or operation approval, and that if I do not receive approval to construct or operate that I may appeal the decision.

Christian Salamone
Owner or Operator

Date

Signature of Owner or Operator

One Original and One Copy of All Application Forms Should Be Mailed To:
Division of Air Quality
100 W. Water Street, Suite 6A
Dover, Delaware 19904

All Checks Should Be Made Payable To:
State of Delaware

Appendix B
Form AQM-2
Process Flow Diagram

Process Flow Diagram

Sketch the Process Flow Diagram for the equipment or process being applied for. Include each emission unit and control device (even existing emission units that will not be modified by this application). You may identify each emission unit with a simple shape. Label each emission unit and control device with a unique identifier. Show the relationship between each emission unit and/or control device by drawing arrows between them to indicate the flow of air pollutants. List which application forms are included for each emission unit or control device below the shape representing each emission unit or control device . See http://www.delaware.gov/reg2/default.htm for example Process Flow Diagrams for common processes. If you already have a Process Flow Diagram for the equipment or process being applied for, you may attach it to the application instead of using this form.

See attached DRPI-AQM-2 in the Process Flow Diagram in the next page.

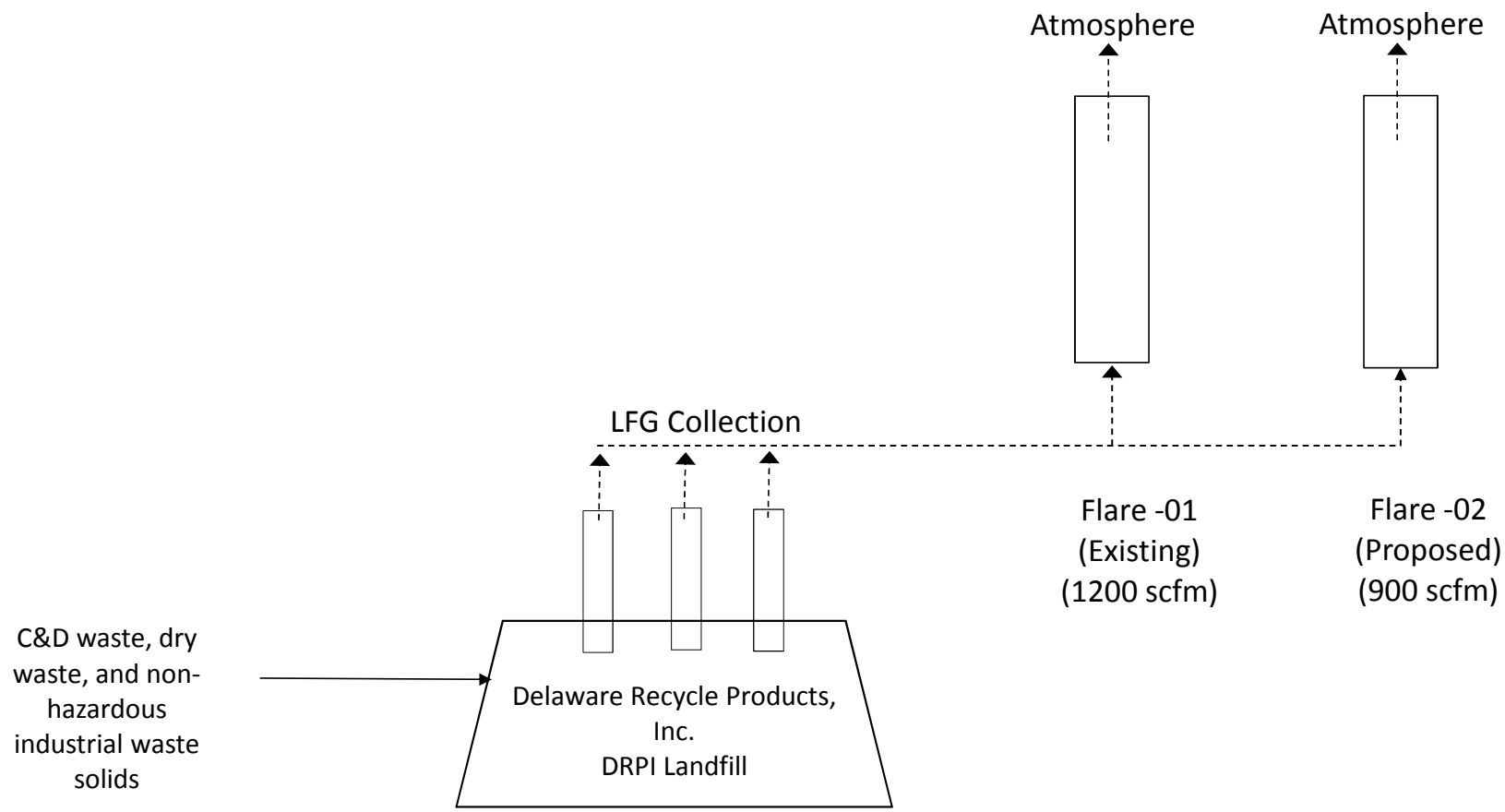

Process Flow Diagram
DRPI Landfill Gas Flare

Source: DRPI, 2017; Golder, 2017.
Created by: MS
Approved by: SM

Process Flow Legend

Solid/ Liquid ——→

Gas - - - - - - - →

Golder Associates

Appendix C1
Form AQM-4.3
Flare Application (Existing)

Flare Application

If you are using this form electronically, press F1 at any time for help

General Information	
1.	Facility Name: **Delaware Recyclable Products, Inc. (DRPI) Landfill**
2.	Equipment ID Number: **Flare -01 (existing)**
3.	Flare Type: ☐ Elevated ☒ Ground ☐ Other (Specify):
4.	Flare Design: ☐ Air-Assisted ☐ Steam-Assisted ☒ Non-Assisted ☐ Other (Specify):
If the Flare is Steam-Assisted, complete the rest of Question 4. If not, proceed to Question 5.	
4.1.	Steam Injection Rate: pounds/hour
4.2.	Steam Pressure: **atm**
5.	Manufacturer: **LFG Specialties, Inc.**
6.	Model: **PCF822I6**
7.	Serial Number: **1510**
Attach the Manufacturer's Specification Sheet.	

Operating Information	
8.	Flare Stack Height: **25 feet**
9.	Flare Stack Diameter: **1.25 feet**
10.	Flame Temperature: **1,400 °F**
11.	Turn Down Ratio: **10:1**
12.	Flare Tip Diameter: **0.67 feet**
13.	Minimum BTU Rating for Flare: **304.0 BTU/scf**
14.	Maximum BTU Rating for Flare: **506.0 BTU/scf**
15.	Describe the Operation of the Flare's Ignition System: **A propane pilot flame ignites the landfill gas. An ultraviolet flame scanner gives flame confirmation and provides for flare safety shutdown.**
16.	Heat Release Rate: **2, 550,197** calories/second

Contaminant Information

17. Percent of Each Contaminant in the Waste Gas, Heating Value, and Destruction Efficiency

If more than five Contaminants are present, attach additional copies of this page as needed.

	Contaminant	CAS Number	Percent of Waste Gas	Heating Value	Destruction Efficiency
17.1.	**Methane**	**74-82-8**	**50.0 %**	**1013** BTUs	**98** %
17.2.	**NMOC**	**NA**	**0.0595 %**	**Nil** BTUs	**98** %
17.3.			**%**	BTUs	%
17.4.			**%**	BTUs	%
17.5.			**%**	BTUs	%

Gas Stream Information

18. Maximum Inlet Volumetric Gas Flow Rate: **1,200 acfm** at **68 °F**

19. Maximum Outlet Volumetric Gas Flow Rate: **N/A acfm** at **°F**

20. Heat Content of Waste Gas: **330.0 BTU/scf**

21. Exit Gas Velocity: **N/A feet/second**

Auxiliary Fuel Information

22. Describe the Operating Conditions that Necessitate Introducing Auxiliary Fuel to the Flare: **Propane is used for the pilot flame. Auxiliary fuel is not used.**

23. Auxiliary Fuel Type:
- ☐ Natural Gas
- ☐ Diesel
- ☐ No. 2 Fuel Oil
- ☐ No. 4 Fuel Oil
- ☐ Propane
- ☐ Biodiesel
- ☐ Refinery Fuel Gas
- ☐ Other (Specify):

24. Heat Content of Auxiliary Fuel: **BTU/MMCF**

25. % Sulfur of Auxiliary Fuel: %

26. Maximum Hourly Fuel Usage: **MMCF**

27. Maximum Yearly Fuel Usage: **MMCF**

Pilot Flame Monitoring Information

28. Is the Presence of the Pilot Flame Monitored? ☒ YES ☐ NO

If Yes, complete the rest of Question 28. If NO, proceed to Question 29.

Pilot Flame Monitoring Information

28.1. Monitor Type: ☒ Thermocouple
☐ Other (Specify):

28.2. Does the Flare Shut Off if the Pilot Flame is Not Detected? ☒ YES ☐ NO

Monitoring and Alarm Information

29. Are There Any Alarms You Would Like the Department to Consider When Drafting the Permit? ☐ YES ☒ NO

If YES, complete the rest of Question 29. If NO, proceed to Question 30.

29.1. Describe the System Alarm(s):

If there are more than five alarms, attach additional copies of this page as needed.

	Operating Parameter Monitored	Describe Alarm Trigger	Monitoring Device or Alarm Type	Does the Alarm Initiate an Automated Response?
29.1.1.			☐ Visual ☐ Auditory ☐ Automatic (Remote Monitoring) ☐ Other	☐ NO ☐ YES Describe:
29.1.2.			☐ Visual ☐ Auditory ☐ Automatic (Remote Monitoring) ☐ Other	☐ NO ☐ YES Describe:
29.1.3.			☐ Visual ☐ Auditory ☐ Automatic (Remote Monitoring) ☐ Other	☐ NO ☐ YES Describe:
29.1.4.			☐ Visual ☐ Auditory ☐ Automatic (Remote Monitoring) ☐ Other	☐ NO ☐ YES Describe:
29.1.5.			☐ Visual ☐ Auditory ☐ Automatic (Remote Monitoring) ☐ Other	☐ NO ☐ YES Describe:

Additional Information

30. Is There Any Additional Information Pertinent to this Application? ☒ YES ☐ NO

If YES, complete the rest of Question 30.

30.1. Describe: **Gas flow and flare temperature are monitored. Flare temperature greater than ambient temperature during gas flow is a positive indicator of methane and NMOC destruction. A propane pilot flame ignites the landfill gas. Presence of the pilot flame is monitored by a thermocouple. The blowers are shut down if a pilot flame is not present. Methane content of the landfill gas is stated in items 17.1 and 20 above as 50 percent methane, however, the actual concentration of methane is expected to be less due to the industrial waste placement in the landfill. Note a letter regarding flare temperture is attached in the next page.**

LFG SPECIALTIES

November 17, 1997

Mr. Matthew P. Williams
Delaware Recyclable Products, Inc.
201 Marsh Lane
New Castle, Delaware 19720

RE.: Utility Flare Temperature Monitoring

Dear Mr. Williams:

This letter is in response to your request for the addition of a continuous temperature monitoring and recording to the LFG Specialties flare Model CF822I6 quoted in our Proposal No. 59713.

We wish to point out that the proposed flare is equipped with two redundant temperature sensors that sense the pilot flame during start-up and allow the landfill gas to flow to the tip. The same temperature sensors are also used as a back-up for the ultraviolet flame scanner to shut the landfill gas flow should the flame go out and the temperature drops to below a minimum setting. The normal temperature readings on this type flare would typically range from 300 °F to 1500 °F. The reason for this wide temperature swing is that the center of the flame will shift based on numerous factors, including gas flow, gas composition, wind speed and wind direction. The temperature at the flame center is typically maintained at 1400 °F or higher. Maintaining a continuous temperature monitoring and recording showing a minimum reading of 1400 °F is not possible on this open flame type flares.

Please note that the flare is designed in accordance with the United States Environmental Protection Agency established criteria for open flares, 40 CFR 60.18 with a minimum of 98% destruction efficiency of hydrocarbons and organic compounds.

If any questions or further information is desired please give us a call. We thank you again for specifying LFG Specialties equipment for this project.

Respectfully,

Louis Kalani
Sr. Application Engineer

RECEIVED
DEC - 1 1997
By

725 S. Friendship Drive
New Concord, Ohio 43762
614/826-7686 FAX: 614/826-4948

Printed on Recycled Paper

Appendix C2
Form AQM-4.3
Flare Application (Proposed)

Flare Application

If you are using this form electronically, press F1 at any time for help

General Information	
1.	Facility Name: **Delaware Recyclable Products, Inc. (DRPI) Landfill**
2.	Equipment ID Number: **Flare-02 (proposed)**
3.	Flare Type: ☐ Elevated ☒ Ground ☐ Other (Specify):
4.	Flare Design: ☐ Air-Assisted ☐ Steam-Assisted ☒ Non-Assisted ☐ Other (Specify):
If the Flare is Steam-Assisted, complete the rest of Question 4. If not, proceed to Question 5.	
4.1.	Steam Injection Rate: pounds/hour
4.2.	Steam Pressure: **atm**
5.	Manufacturer: **LFG Specialties, L.L.C.**
6.	Model: **CFT828I6**
7.	Serial Number: **2512**
Attach the Manufacturer's Specification Sheet.	

Operating Information	
8.	Flare Stack Height: **28 feet**
9.	Flare Stack Diameter: **1.25 feet**
10.	Flame Temperature: **1,400 °F**
11.	Turn Down Ratio: **10:1**
12.	Flare Tip Diameter: **0.5 feet**
13.	Minimum BTU Rating for Flare: **304.0 BTU/scf**
14.	Maximum BTU Rating for Flare: **506.0 BTU/scf**
15.	Describe the Operation of the Flare's Ignition System: **A propane pilot flame ignites the landfill gas.**
16.	Heat Release Rate: **1,911,248** calories/second

Contaminant Information

17. Percent of Each Contaminant in the Waste Gas, Heating Value, and Destruction Efficiency

If more than five Contaminants are present, attach additional copies of this page as needed.

Contaminant	CAS Number	Percent of Waste Gas	Heating Value	Destruction Efficiency
17.1. **Methane**	**74-82-8**	**30.0 - 50.0 %**	**1013** BTUs	**98** %
17.2.		**%**	BTUs	%
17.3.		**%**	BTUs	%
17.4.		**%**	BTUs	%
17.5.		**%**	BTUs	%

Gas Stream Information

18. Maximum Inlet Volumetric Gas Flow Rate: **900 acfm** at **60 °F**

19. Maximum Outlet Volumetric Gas Flow Rate: **N/A acfm** at **°F**

20. Heat Content of Waste Gas: **330.0 BTU/scf**

21. Exit Gas Velocity: **N/A feet/second**

Auxiliary Fuel Information

22. Describe the Operating Conditions that Necessitate Introducing Auxiliary Fuel to the Flare: **Propane is used for the pilot flame. Auxiliary fuel is not used.**

23. Auxiliary Fuel Type:
- ☐ Natural Gas
- ☐ Diesel
- ☐ No. 2 Fuel Oil
- ☐ No. 4 Fuel Oil
- ☐ Propane
- ☐ Biodiesel
- ☐ Refinery Fuel Gas
- ☐ Other (Specify):

24. Heat Content of Auxiliary Fuel: **BTU/MMCF**

25. % Sulfur of Auxiliary Fuel: %

26. Maximum Hourly Fuel Usage: **MMCF**

27. Maximum Yearly Fuel Usage: **MMCF**

Pilot Flame Monitoring Information

28. Is the Presence of the Pilot Flame Monitored? ☒ YES ☐ NO

If Yes, complete the rest of Question 28. If NO, proceed to Question 29.

Pilot Flame Monitoring Information

28.1. Monitor Type: ☒ Thermocouple
☐ Other (Specify):

28.2. Does the Flare Shut Off if the Pilot Flame is Not Detected? ☒ YES ☐ NO

Monitoring and Alarm Information

29. Are There Any Alarms You Would Like the Department to Consider When Drafting the Permit? ☒ YES ☐ NO

If YES, complete the rest of Question 29. If NO, proceed to Question 30.

29.1. Describe the System Alarm(s):

If there are more than five alarms, attach additional copies of this page as needed.

	Operating Parameter Monitored	Describe Alarm Trigger	Monitoring Device or Alarm Type	Does the Alarm Initiate an Automated Response?
29.1.1.	**Flame**	**No flame detected**	☐ Visual ☐ Auditory ☐ Automatic (Remote Monitoring) ☒ Other	☐ NO ☐ YES Describe: **Check landfill gas and pilot fuel flows.**
29.1.2.			☐ Visual ☐ Auditory ☐ Automatic (Remote Monitoring) ☐ Other	☐ NO ☐ YES Describe:
29.1.3.			☐ Visual ☐ Auditory ☐ Automatic (Remote Monitoring) ☐ Other	☐ NO ☐ YES Describe:
29.1.4.			☐ Visual ☐ Auditory ☐ Automatic (Remote Monitoring) ☐ Other	☐ NO ☐ YES Describe:
29.1.5.			☐ Visual ☐ Auditory ☐ Automatic (Remote Monitoring) ☐ Other	☐ NO ☐ YES Describe:

Additional Information

30. Is There Any Additional Information Pertinent to this Application? ☐ YES ☒ NO

If YES, complete the rest of Question 30.

30.1. Describe:

Appendix D
Form AQM-5
Emissions Information

Emissions Information Application

If you are using this form electronically, press F1 at any time for help

Process Information

1.	Number of Individual Pieces of Process Equipment in Process: **2**
2.	Number of Individual Control Devices in Process: **Zero**

Emissions Information for First Emission Point/Stack

3.	Emission Point Name: **Flare-01 (Existing)**
4.	Equipment ID Number for all Process Equipment and Control Devices Venting Through Emission Point/Stack: **Flare-01**
5.	Pollutant Emissions

If more than 15 pollutants are emitted at this Emission Point/Stack, attach additional copies of this page as needed.

	Pollutant Name (Specify VOCs and HAPs Individually in 5.10 through 5.18)	CAS Number (Not required for 5.1 through 5.10)	Maximum Uncontrolled Emission Rate at Design Capacity	Maximum Controlled Emission Rate at Design Capacity	Annual Potential to Emit (PTE)	Requested Permitted Annual Emissions
5.1.	Particulate Matter (PM)		**lbs/hour**	**0.36 lbs/hour**	**1.6** tons/year	tons/year
5.2.	PM_{10}		**lbs/hour**	**0.36 lbs/hour**	**1.6** tons/year	tons/year
5.3.	$PM_{2.5}$		**lbs/hour**	**0.36 lbs/hour**	**1.6** tons/year	tons/year
5.4.	Sulfur Oxides (SO_X)		**lbs/hour**	**9.91 lbs/hour**	**43.4** tons/year	tons/year
5.5.	Nitrogen Oxides (NO_X)		**lbs/hour**	**1.62 lbs/hour**	**7.1** tons/year	tons/year
5.6.	Carbon Monoxide (CO)		**lbs/hour**	**8.8 lbs/hour**	**38.5** tons/year	tons/year
5.7.	Total Volatile Organic Compounds (VOCs)		**lbs/hour**	**0.08 lbs/hour**	**0.3** tons/year	tons/year
5.8.	Total Hazardous Air Pollutants (HAPs)		**lbs/hour**	**0.04 lbs/hour**	**0.18** tons/year	tons/year

Emissions Information for First Emission Point/Stack

5.9.	CO_2		**lbs/hour**	**2760 lbs/hour**	**12090** tons/year	tons/year
5.10.	CO_{2e}		**lbs/hour**	**2761 lbs/hour**	**12127** tons/year	tons/year
5.11.	**NMOC**		**lbs/hour**	**0.19 lbs/hour**	**0.9** tons/year	tons/year
5.12.			**lbs/hour**	**lbs/hour**	tons/year	tons/year
5.13.			**lbs/hour**	**lbs/hour**	tons/year	tons/year
5.14.			**lbs/hour**	**lbs/hour**	tons/year	tons/year
5.15.			**lbs/hour**	**lbs/hour**	tons/year	tons/year

6. Provide Any Additional Information Necessary to Understanding the Emission Rates Provided Above: **See Table 2-1.**

Attach the Basis of Determination or Calculations for each Emission Rate provided above.

Emissions Information for Second Emission Point/Stack

7. Emission Point Name: **Flare-02 (Proposed)**

8. Equipment ID Number for all Process Equipment and Control Devices Venting Through Emission Point/Stack: **Flare-02**

9. Pollutant Emissions

If more than 15 pollutants are emitted at this Emission Point/Stack, attach additional copies of this page as needed.

	Pollutant Name (Specify VOCs and HAPs Individually in 9.10 through 9.18)	CAS Number (Not required for 9.1 through 9.10)	Maximum Uncontrolled Emission Rate at Design Capacity	Maximum Controlled Emission Rate at Design Capacity	Annual Potential to Emit (PTE)	Requested Permitted Annual Emissions
9.1.	Particulate Matter (PM)		**lbs/hour**	**0.27 lbs/hour**	**1.2** tons/year	tons/year
9.2.	PM_{10}		**lbs/hour**	**0.27 lbs/hour**	**1.2** tons/year	tons/year
9.3.	$PM_{2.5}$		**lbs/hour**	**0.27 lbs/hour**	**1.2** tons/year	tons/year

Emissions Information for Second Emission Point/Stack

9.4.	Sulfur Oxides (SO_X)		**lbs/hour**	**7.43 lbs/hour**	**32.5** tons/year	tons/year
9.5.	Nitrogen Oxides (NO_X)		**lbs/hour**	**1.21 lbs/hour**	**5.3** tons/year	tons/year
9.6.	Carbon Monoxide (CO)		**lbs/hour**	**6.6 lbs/hour**	**28.9** tons/year	tons/year
9.7.	Total Volatile Organic Compounds (VOCs)		**lbs/hour**	**0.06 lbs/hour**	**0.2** tons/year	tons/year
9.8.	Total Hazardous Air Pollutants (HAPs)		**lbs/hour**	**0.03 lbs/hour**	**0.14** tons/year	tons/year
9.9.	CO_2		**lbs/hour**	**2070 lbs/hour**	**9068** tons/year	tons/year
9.10.	CO_{2e}		**lbs/hour**	**2071 lbs/hour**	**9095** tons/year	tons/year
9.11.	**NMOC**		**lbs/hour**	**0.15 lbs/hour**	**0.6** tons/year	tons/year
9.12.			**lbs/hour**	**lbs/hour**	tons/year	tons/year
9.13.			**lbs/hour**	**lbs/hour**	tons/year	tons/year
9.14.			**lbs/hour**	**lbs/hour**	tons/year	tons/year
9.15.			**lbs/hour**	**lbs/hour**	tons/year	tons/year

10. Provide Any Additional Information Necessary to Understanding the Emission Rates Provided Above: **See Table 2-2**

Attach the Basis of Determination or Calculations for each Emission Rate provided above.

Emissions Information for Third Emission Point/Stack

11. Emission Point Name:

12. Equipment ID Number for all Process Equipment and Control Devices Venting Through Emission Point/Stack:

13. Pollutant Emissions

If more than 15 pollutants are emitted at this Emission Point/Stack, attach additional copies of this page as needed.

Emissions Information for Third Emission Point/Stack

	Pollutant Name (Specify VOCs and HAPs Individually in 13.10 through 13.18)	CAS Number (Not required for 13.1 through 13.10)	Maximum Uncontrolled Emission Rate at Design Capacity	Maximum Controlled Emission Rate at Design Capacity	Annual Potential to Emit (PTE)	Requested Permitted Annual Emissions
13.1.	Particulate Matter (PM)		**lbs/hour**	**lbs/hour**	tons/year	tons/year
13.2.	PM_{10}		**lbs/hour**	**lbs/hour**	tons/year	tons/year
13.3.	$PM_{2.5}$		**lbs/hour**	**lbs/hour**	tons/year	tons/year
13.4.	Sulfur Oxides (SO_X)		**lbs/hour**	**lbs/hour**	tons/year	tons/year
13.5.	Nitrogen Oxides (NO_X)		**lbs/hour**	**lbs/hour**	tons/year	tons/year
13.6.	Carbon Monoxide (CO)		**lbs/hour**	**lbs/hour**	tons/year	tons/year
13.7.	Total Volatile Organic Compounds (VOCs)		**lbs/hour**	**lbs/hour**	tons/year	tons/year
13.8.	Total Hazardous Air Pollutants (HAPs)		**lbs/hour**	**lbs/hour**	tons/year	tons/year
13.9.	CO_2		**lbs/hour**	**lbs/hour**	tons/year	tons/year
13.10.	CO_{2e}		**lbs/hour**	**lbs/hour**	tons/year	tons/year
13.11.			**lbs/hour**	**lbs/hour**	tons/year	tons/year
13.12.			**lbs/hour**	**lbs/hour**	tons/year	tons/year
13.13.			**lbs/hour**	**lbs/hour**	tons/year	tons/year
13.14.			**lbs/hour**	**lbs/hour**	tons/year	tons/year
13.15.			**lbs/hour**	**lbs/hour**	tons/year	tons/year

14. Provide Any Additional Information Necessary to Understanding the Emission Rates Provided Above:

Attach the Basis of Determination or Calculations for each Emission Rate provided above.

Emissions Information for Fourth Emission Point/Stack

15. Emission Point Name:

16. Equipment ID Number for all Process Equipment and Control Devices Venting Through Emission Point/Stack:

17. Pollutant Emissions

If more than 15 pollutants are emitted at this Emission Point/Stack, attach additional copies of this page as needed.

	Pollutant Name (Specify VOCs and HAPs Individually in 17.10 through 17.18)	CAS Number (Not required for 17.1 through 17.10)	Maximum Uncontrolled Emission Rate at Design Capacity	Maximum Controlled Emission Rate at Design Capacity	Annual Potential to Emit (PTE)	Requested Permitted Annual Emissions
17.1.	Particulate Matter (PM)		**lbs/hour**	**lbs/hour**	tons/year	tons/year
17.2.	PM_{10}		**lbs/hour**	**lbs/hour**	tons/year	tons/year
17.3.	$PM_{2.5}$		**lbs/hour**	**lbs/hour**	tons/year	tons/year
17.4.	Sulfur Oxides (SO_X)		**lbs/hour**	**lbs/hour**	tons/year	tons/year
17.5.	Nitrogen Oxides (NO_X)		**lbs/hour**	**lbs/hour**	tons/year	tons/year
17.6.	Carbon Monoxide (CO)		**lbs/hour**	**lbs/hour**	tons/year	tons/year
17.7.	Volatile Organic Compounds (VOCs)		**lbs/hour**	**lbs/hour**	tons/year	tons/year
17.8.	Total Hazardous Air Pollutants (HAPs)		**lbs/hour**	**lbs/hour**	tons/year	tons/year
17.9.	CO_2		**lbs/hour**	**lbs/hour**	tons/year	tons/year
17.10.	CO_{2e}		**lbs/hour**	**lbs/hour**	tons/year	tons/year
17.11.			**lbs/hour**	**lbs/hour**	tons/year	tons/year
17.12.			**lbs/hour**	**lbs/hour**	tons/year	tons/year
17.13.			**lbs/hour**	**lbs/hour**	tons/year	tons/year
17.14.			**lbs/hour**	**lbs/hour**	tons/year	tons/year
17.15.			**lbs/hour**	**lbs/hour**	tons/year	tons/year

Emissions Information for Fourth Emission Point/Stack

18. Provide Any Additional Information Necessary to Understanding the Emission Rates Provided Above:

Attach the Basis of Determination or Calculations for each Emission Rate provided above.

If there are more than four Emission Points/Stacks, attach additional copies of this form as needed.

Overall Process Emissions

19. Pollutant Emissions

If more than 15 pollutants are emitted from this Process, attach additional copies of this page as needed.

	Pollutant Name (Specify VOCs and HAPs Individually in 19.10 through 19.18)	CAS Number (Not required for 19.1 through 19.10)	Maximum Uncontrolled Emission Rate at Design Capacity	Maximum Controlled Emission Rate at Design Capacity	Annual Potential to Emit (PTE)	Requested Permitted Annual Emissions
19.1.	Particulate Matter (PM)		**lbs/hour**	**0.7 lbs/hour**	**2.7** tons/year	tons/year
19.2.	PM_{10}		**lbs/hour**	**0.7 lbs/hour**	**2.7** tons/year	tons/year
19.3.	$PM_{2.5}$		**lbs/hour**	**0.7 lbs/hour**	**2.7** tons/year	tons/year
19.4.	Sulfur Oxides (SO_X)		**lbs/hour**	**19.8 lbs/hour**	**75.9** tons/year	tons/year
19.5.	Nitrogen Oxides (NO_X)		**lbs/hour**	**3.2 lbs/hour**	**12.4** tons/year	tons/year
19.6.	Carbon Monoxide (CO)		**lbs/hour**	**6.6 lbs/hour**	**28.9** tons/year	tons/year
19.7.	Total Volatile Organic Compounds (VOCs)		**lbs/hour**	**0.2 lbs/hour**	**0.7** tons/year	tons/year
19.8.	Total Hazardous Air Pollutants (HAPs)		**lbs/hour**	**0.1 lbs/hour**	**0.3** tons/year	tons/year
19.9.	CO_2		**lbs/hour**	**4831 lbs/hour**	**21158** tons/year	tons/year
19.10.	CO_{2e}		**lbs/hour**	**4832 lbs/hour**	**21222** tons/year	tons/year
19.12.	**NMOC**		**lbs/hour**	**0.4 lbs/hour**	**1.5** tons/year	tons/year

Overall Process Emissions

19.13.		**lbs/hour**	**lbs/hour**	tons/year	tons/year
19.14.		**lbs/hour**	**lbs/hour**	tons/year	tons/year
19.15.		**lbs/hour**	**lbs/hour**	tons/year	tons/year

20. Provide Any Additional Information Necessary to Understanding the Emission Rates Provided Above:

Attach the Basis of Determination or Calculations for each Emission Rate provided above.

Minor New Source Review Information

21. Does the Process Have the Potential to Emit More Than Five Tons Per Year of Any Pollutant? ☒ YES ☐ NO

22. Is the Source New or Existing? ☐ NEW ☒ EXISTING
See Question 11 of AQM-1

If the Process has the Potential to Emit more than five tons per year of any pollutant, and is a New Source, a Control Technology Analysis pursuant to Regulation No. 1125 Section 4 must be conducted and attached to this application.

Major New Source Review Information

23. Does the Process Have the Potential to Emit More Than the Significance Level for Any Pollutant? *(Check All That Apply)*

- ☐ Greater Than 25 Tons Per Year of Particulate Matter (PM)
- ☐ Greater Than 15 Tons Per Year of PM_{10}
- ☐ Greater Than 10 Tons Per Year of $PM_{2.5}$
- ☒ Greater Than 40 Tons Per Year of Sulfur Dioxide(SO_2)
- ☐ Greater Than 25 Tons Per Year of Nitrogen Oxides (NO_X) in New Castle and Kent County
- ☐ Greater Than 100 Tons Per Year of Nitrogen Oxides (NO_X) in Sussex County
- ☐ Greater Than 100 Tons Per Year of Carbon Monoxide (CO)
- ☐ Greater Than 25 Tons Per Year of Total Volatile Organic Compounds (VOCs) in New Castle and Kent County
- ☐ Greater Than 50 Tons Per Year of Total Volatile Organic Compounds (VOCs) in Sussex County
- ☐ Greater Than 75,000 Tons Per Year of Equivalent Carbon Dioxide (CO_{2e})

If the Process has the Potential to Emit greater than any of the amounts listed above 7 DE Admin. Code 1125 Sections 2 and/or 3 apply. Contact the Department at (302) 323-4542 or (302) 739-9402 for additional information

Additional Information

24. Is There Any Additional Information Pertinent to this Application? ☐ YES ☒ NO

If YES, complete the rest of Question 24.

24.1. Describe:

Appendix E
Proposed Flare System Specifications

LFG Specialties

(a CB&I Company)

Proposal & Pricing

Utility Flare System

1350 SCFM
Model PCFT828I6

Prepared for:
Jeff Fors
Waste Management, Inc.
Phone: (585) 773-8646
Email: jsfors@wm.com
Fairless Landfill
Morrisville, PA

Reference #: 021703

February 15, 2017

Presented by:
Chris King
Project Manager
LFG Specialties
(419) 425-6019
chris.king@cbi.com

Alternate Contact:
Lee Zink
Project Manager
LFG Specialties
(419) 425-6190
lee.zink@cbi.com

A World of **Solutions**
Visit **www.CBI.com**

LEASE AGREEMENT

This Lease Agreement "Agreement" which includes the Equipment Specification and Terms and Conditions of Lease below is entered into on the undersigned date, by and between the lessor, LFG Specialties, L.L.C. (LFG Specialties), a Louisiana corporation, and lessee, _____ (hereinafter "Lessee").

A. LFG Specialties is the owner of certain personal property "Equipment" more fully described in paragraph 1 below, "Equipment Specification".

B. Lessee wishes to lease from LFG Specialties such Equipment on the terms and conditions set forth herein for use in Lessee's business conducted at the address set forth above.

Therefore, in consideration of the covenants contained herein and for other good and valuable consideration, the legal sufficiency of which is acknowledged, the parties wishing to be legally bound agree as follows:

I. EQUIPMENT SPECIFICATION

Lessee hereby leases from LFG Specialties such Equipment and Services as described in this Agreement per the following and subject to the standard "Terms and Conditions of Lease" herein:

A. Equipment Scope:

LFG Specialties' scope of equipment supply and brief description of the system is listed below. For a more detailed system description please see the attached technical specification.

1. One LFG Specialties fully assembled skid mounted landfill gas candlestick flare including:
   - One flare Model CFT828I6 with peripheral equipment (capacity 68 – 1350 SCFM of landfill gas at 30-50% methane content)
   - One 6 in. Groth Model 7628 or equal flame arrester
   - One propane pilot assembly with automatic igniter system
   - One Continental Model 51.04 or equal multistage centrifugal landfill gas blower with 40 HP, 460 VAC, three phase motor with direct drive (blower is rated for 303 – 1350 SCFM @ 60 in. w.c. inlet vacuum and 15 in. w.c. discharge pressure, 100 deg. F, 750 ft. asl.)
   - Associated instrumentation including vacuum, pressure and temperature gauges
   - One set of associated Flex Couplings
   - One 8 in. manual valve located at blower inlet
   - One 8 in. fail safe automatic electric header valve
   - One 36 in. condensate knock out pot with 20 micron demister/filter, 8 in. inlet and 8 in. outlet, sight glass, level switch, and drain port
   - One control rack with:

- Flame-Trol I relay-based automatic flare controller with blower amp meter and blower hours meter
- Blower motor control center with starters and circuit protectors
- Main power disconnect and step down transformer

- One thermal dispersion Flow Meter and Yokogawa paperless chart recorder to record flame temperature and landfill gas flow
- 8'-2'' wide by 24 ft. long structural steel skid
- All skid components interconnecting carbon steel piping and wiring
- One O&M Manual (electronic copy) including: User manual, cut sheets, and drawings
- One User Manual (bound paper copy)

Notes:

1. All offloading and installation by others.
2. Landfill gas supply system must be properly engineered to provide a stable gas supply for the flare system to function properly.
3. A properly designed condensate removal system must be in place within 50 ft. upstream of the flare system for reliable operation. Additionally, all condensate drain lines on the skid to be connected, by others, prior to start up. A recommended drain line schematic available upon request.
4. The flare system must be supplied power from a stable energy source with a voltage deviation of no more than 7%.

B. Price Schedule:

Monthly rental rate for the LFG Specialties Model PCFT828I6 Utility Flare System as described in Section A, item 1 FOB Findlay, OH, excluding tax, is **$ 4,750.00**

Purchase price for the LFG Specialties Model PCFT828I6 Utility Flare System as described in Section A, item 1 FOB Findlay, OH, excluding tax, is **$ 113,590.00**

Two days of start-up assistance and training (travel and living expenses are included) **$ 5,600.00**

*NOTE: Should the system not be commissioned by LFG Specialties, the warranty will be void.

Estimated shipping and handling from LFG Specialties shop to site (shipping to be charged at actual cost plus 15% handling fee) **$ 2,700.00**

Estimated shipping and handling from site to LFG Specialties shop (shipping to be charged at actual cost plus 15% handling fee) **$ 2,700.00**

ALL PRICING IS FOB — FINDLAY, OHIO

Upon completion of the rental period the Lessee may (i) use 75% of the lease payments as credit toward the total purchase price of the current system not to exceed the total aggregate of the purchase price, (ii) use 15% of the lease payments as a credit toward the total purchase price of an alternate system not to exceed the total aggregate of the purchase price; or (iii) purchase the current system in accordance with (i) and 15% of the lease amounts beyond the total purchase price of the current system toward the purchase price of an alternate system not to exceed the aggregate of the purchase price.

Options: RESERVED

C. Lease Agreement Terms:

LFG Specialties Lease Agreement calls for the Lessee to pay all operating and maintenance expenses, installation costs, freight from our facility to the project site and return, costs of repair or replacement of any damaged or missing parts, all applicable taxes and necessary insurance.

Minimum rental period is two (2) months. This Lease Agreement shall remain in force for a period of ____ (XX) month(s) from the date of shipment. Renewal thereafter for monthly periods shall be automatic, provided that either party to this lease may terminate it at the end of any month period by giving the other party at least ten (10) days written notice of intention to terminate. Upon termination, rent shall still be paid until equipment is returned to LFG Specialties facilities.

D. Shipment Schedule:

LFG Specialties makes every reasonable effort to meet our Lessee's shipment requests and special requirements. Shipment for the flare system outlined in this Agreement is:

Equipment Ready to Ship: 8 to 10 weeks from receipt of approval for submittal drawings
(Actual shipment availability to be determined at time of submittal approval)

Note: Rental units cannot be held without written purchase order.

E. Payment Terms:

An initial payment covering the first and last month of the Lease Agreement shall be made at time of contract acceptance.

Monthly invoices will then be issued at the beginning of each month of the lease, with payment of 100%, net due 30 days from date of invoice.

NOTE: Interest will be charged on overdue accounts at the maximum allowable rate under State Regulations.

Prices are FOB LFG Specialties, Findlay, Ohio, with freight prepaid and added to second month invoice, unless stated otherwise.

Prices are quoted firm for prompt acceptance and shipment per delivery schedule. Proposals are valid for 45 days from date of issue.

Prices do not include any taxes, duties or assessments. Should any tax or charge imposed by any governmental authority on this transaction increase during the term of this lease, Lessee agrees to pay LFG Specialties.

Sales and Use Tax is not included. Lessee will provide the appropriate exemption or direct pay certification for sales and use tax. Should this exemption not be available, sales or use tax will be invoiced by separate line items."

F. Field Service Rates and Availability:

LFG Specialties can furnish an on site advisor during any aspect of the installation and erection or startup of our equipment deemed necessary by our customers in accordance with our standard "Terms and Conditions of Sales". LFG Specialties recommends 2 days of start up assistance and training for utility flares. Service personnel should be scheduled two weeks in advance for standard installation, erection, start-up or service work. The Customer Installation Checklist must be signed and returned prior to these services being performed.

Service personnel are available on an on call service for a daily rate (work or travel) of $1,400. If required, airfare and rental cars will be an additional charge.

G. Technical Data:

1. Gas Composition

   - 30-50% CH_4, Remainder – CO_2, Air, Inerts (gas compositions greater than 50% CH_4 will result in a heat radiation level greater than 500 BTU/ft^2 at 6 ft. elevation)
   - H_2S to be less than 1000 ppm
   - O_2 to be less than 5%
   - System inlet temperature: 100°F
   - Flare stack inlet pressure: 12 in. w.c.

2. Flare Size

   - 8 in. tip, 28 ft. overall height flare

Note: A minimum distance from power lines and structures of 4 times the stack height must be maintained around the flare. If this distance is not feasible, please contact LFG Specialties engineering.

3. Destruction efficiency at design flow with gas methane content 30 to 50% -- 98% overall destruction of total hydrocarbons (per the US EPA AP-42)

   - Guaranteed to meet E.P.A. emission standards for landfill gas disposal in utility "candle type" flares.
   - Flare is designed in accordance with the United States Environmental Protection Agency (EPA) established criteria for open flares, 40 CFR 60.18.

4. Flow/Emissions (expected) at maximum flow, 50% methane content and 1400°F combustion temperature:

N_2	73.5	% vol.
O_2	13.6	% vol.
CO_2	6.0	% vol.
H_2O	6.9	% vol.

NO_x	0.068	lbs./MMBTU[1]
CO	0.31	lbs./MMBTU[2]

5. Pressure loss through the flare, from the inlet flange through the flare stack, will typically be less than 10" w.c.

6. All utility flare units are designed and constructed to meet Seismic zone 4 guidelines and 100-mph wind loading requirements (per ASCE 7-88, Exp. C).

7. LFG Flow Ranges: The flare stack has a flow turndown ratio of 10:1 based on BTU content. The blower has a flow range outlined in Section A.

H. Equipment Warranty:

LFG Specialties warrants the Equipment as outlined and specified in this Agreement for the period of twelve (12) months from shipment. See "Warranties" (Condition 2) in the Terms and Conditions for details of the warranty.

I. Quality Control Standards:

LFG Specialties follows the Quality Control Procedures as outlined by the applicable national codes and standards adhered to in the design, engineering, manufacture, assembly and test of our equipment, including but not limited to:

Structural Design	------	AISC
Drawings	------	ANSI S5.1
Fabrication (welding)	------	AWS
Electrical (components)	------	UL
(wiring)	------	NEC
Painting, Sandblast	------	SSPL, SP-6

LFG Specialties does on occasion subcontract fabrication of subassemblies for our equipment. All subcontract work is carried out under LFG Specialties direction and inspected in accordance with our quality control standards.

The nondestructive testing of our equipment includes:

Welding	------	100% visual inspection
Dimensional	------	All dimensions to drawings, correct position and sizing of all connects
Piping	------	100% visual inspection (in/out)
Painting	------	Visual inspection/instrument check using microtest coating thickness gauge
Wiring	------	Functional Check
Controls	------	Functional check, process simulation

[1] AP 42, Vol I, 5th Ed, Chapter 13, Section 13.5 "Industrial Flares", Table 13.5-1 "Emissions Factors", April 2015
[2] AP 42, Vol I, 5th Ed, Chapter 13, Section 13.5 "Industrial Flares", Table 13.5-2 "Emissions Factors", April 2015

LFG Specialties also supplies full submittal documentation on the equipment; including mechanical and electrical drawings and component cut sheets. For equipment support, a complete Operation & Maintenance Manual is included with each unit.

J. Scope of Work:

LFG Specialties will furnish all the Equipment and Services as outlined in this Agreement. Equipment will be fully fabricated, painted and tested as described herein at LFG Specialties facility, Findlay, Ohio.

This Agreement only covers the supply of Equipment and installation advisory service as defined. The following items are not included in LFG Specialties scope of supply.

- Construction drawings: All equipment layout, interconnect details and foundations designs are the responsibilities of Purchaser.

- Note: LFG Specialties drawings will outline field installation connections (location and size) and loading data.

- All installation and civil work including foundations, equipment erection, main and interconnecting piping and wiring including required equipment and materials are the responsibilities of Purchaser.

- All permits/licenses required for installation and/or operation of the Equipment are the responsibility of Purchaser. LFG Specialties will provide necessary manufacturer's data on the equipment as required for permit/license applications.

- Compliance testing. All compliance/performance testing will be the responsibility of the Purchaser. LFG Specialties will have representative/s present for tests at Purchaser's request and expense. LFG Specialties fully guarantees the Equipment to meet E.P.A. emission standards when operated within the specified conditions.

II. LFG SPECIALTIES, L.L.C. TERMS AND CONDITIONS OF LEASE

1) DEFINITIONS: Within these "Terms and Conditions of Lease" the term "LFG Specialties" shall mean LFG Specialties, L.L.C. The term "Lessee" shall mean the person, municipality, firm, or corporation to whom this Agreement is addressed. The term "Equipment" means those articles, materials, supplies, drawings, data, or other property or services described herein.

2) WARRANTIES:

A. "Material and Workmanship Warranty": LFG Specialties warrants to the Lessee that the Equipment of its own manufacture will be complete in all its parts, and for the Warranty Period specified, will under proper application and operation be free from material defects in material or workmanship. LFG Specialties' warranty obligation shall be limited to the following:

(i) Replacement or repair of any Equipment or parts which under normal and proper operating conditions are, in LFG Specialties' sole opinion, found and confirmed defective and are returned to LFG Specialties' facilities within the Warranty Period, transportation charges prepaid.

(ii) Notwithstanding the above, LFG Specialties shall have no obligation as a result of improper storage, installation, repairs or modifications not made by LFG Specialties, or as a result of removal, improper use or misapplication of the Equipment after it has been delivered to the Lessee.

(iii) Lessee shall be responsible for freight charges in connection with the return or replacement of any defective Equipment or parts.

B. "Warranty as to Equipment not made by LFG Specialties": LFG Specialties will take any steps reasonably within its power to make available to Lessee any manufacturer's warranty applicable to the Equipment.

C. "Except as outlined herein, and to Title, it is expressly agreed":

(i) "THAT THERE IS NO IMPLIED WARRANTY OF MERCHANTABILITY OR FITNESS FOR A PARTICULAR PURPOSE, NOR OTHER WARRANTY, EXPRESS, IMPLIED, OR STATUTORY, NOR ANY AFFIRMATION OF FACT, OR PROMISE BY LFG SPECIALTIES WITH REFERENCE TO THE EQUIPMENT OR PARTS THEREOF, OR OTHERWISE, WHICH EXTENDS BEYOND THE DESCRIPTION OF THE EQUIPMENT AS SET FORTH HEREIN, AND

(ii) that the Lessee acknowledges that it is leasing the Equipment solely on the basis of the commitments of LFG Specialties expressly set forth herein."

(iii) That LFG Specialties shall have the sole and exclusive right to determine and confirm if warranties apply.

(iv) All warranties stated herein shall be valid for the time period stated in I.H. above.

3) USE BY LESSEE:

Lessee shall use the equipment leased in a careful and proper manner and shall comply with all laws, ordinances, and regulations relating to the possession, use, or maintenance of the equipment.

4) INSPECTION BY LFG SPECIALTIES:

LFG Specialties shall at all times during business hours have the right to enter the premises where the Equipment may be located for the purpose of inspecting it or observing its use. Lessee shall give LFG Specialties immediate notice of any attachment or other judicial process affecting any of the Equipment leased and shall, upon LFG Specialties' request, inform LFG Specialties of the exact location of the equipment affected.

5) SERVICES:

A. INSTALLATION AND ERECTION

The Equipment shall be transported, installed on a foundation, and connected by Lessee and at the Lessee's expense, in strict accordance with the "Customer Installation Checklist" unless otherwise expressly agreed herein. Upon request of Lessee, LFG Specialties will furnish a field service representative to assist Lessee during the installation and erection of the Equipment, for which the Lessee shall pay the published rates in accordance with I.F above per day plus actual living and traveling expenses.

B. START-UP

Start-up Services will consist of LFG Specialties' representative 1) reviewing the Customer Installation Checklist for proper compliance; 2) reviewing the Process Control checklist as outlined in Commissioning Report; and 3) training on process controls and maintenance as outlined in O&M Manual.

C. SERVICE WARRANTY

The field service representative furnished by LFG Specialties will be qualified to assist in the installation, erection and/or start up services ("Services") of the Equipment, but it is understood and agreed that, should Lessee utilize the field service representative in any manner as a foreman, supervisor, etc., that said representative shall become for that purpose, the Lessee's employee, for whom Lessee shall be liable, shall maintain adequate insurance coverage and shall hold harmless and indemnify LFG Specialties from and against any and all claims arising out of said representative's acts or omissions while serving in such capacity.

While performing such Services, LFG SPECIALTIES warrants, represents, and covenants that: (1) LFG SPECIALTIES has the capability, experience, and means required to perform the Services; (2) such Services will be performed using equipment, and material qualified and/or suitable therefor; and (3) LFG SPECIALTIES will perform the Services in a diligent and workmanlike manner consistent with accepted professional practices and standards for nationally recognized firms engaged in similar work, as in effect at the time the Services are performed.

LFG SPECIALTIES further warrants, represents, and covenants that LFG SPECIALTIES will perform the Services in compliance with all applicable federal, state, and local laws, regulations, and ordinances as in effect and construed at the time the Services are performed.

6) INDEMNITY:

Lessee agrees to indemnify and hold harmless LFG Specialties from all liabilities and losses arising from damages, demands, claims, suits, costs, and expenses including reasonable legal fees and other expenses of litigation for all injuries to and death of persons and for loss of or damage to property arising out of, connected with, or resulting from the any services provided pursuant to this

Agreement or any leased Equipment, including without limitation the delivery, possession, use, operation, or return of such Equipment, except such liabilities for losses as are attributable to the sole negligence or willful misconduct of LFG Specialties, its agents, or employees.

7) DAMAGES:

Notwithstanding any other provision herein, no event shall LFG Specialties be liable for any special, consequential or incidental damages, nor for loss of anticipated profits nor for loss of use of the equipment or of any installation, system, operation or services into which the equipment or parts may be put, or with respect to which any service that may be performed by LFG Specialties. This limitation on LFG Specialties' liability shall apply to any liability for default under or in connection with the equipment, parts or services delivered hereunder, whether based on negligence, including errors, omissions or other acts, or willful misconduct, warranty, or contract, failure of or delay in delivery or otherwise.

Furthermore, and notwithstanding any other provision herein, in no event shall LFG Specialties' liability, whether arising out of indemnity, negligence, including errors, omissions or other acts, or willful misconduct, or based in contract, warranty, or for any other cause of action, exceed in the cumulative aggregate with respect to all claims arising out of or related to this Agreement the total amount of rent or, if option to purchase is exercised, the purchase price paid by Lessee under this Agreement, less a reasonable charge for any utilization by Lessee.

8) ASSUMPTION OF RISK:

Assumption of Risk/Release of Liability: Lessee is fully aware and acknowledges there is a risk of injury or property damage arising out of the use or operation of the Equipment leased or purchased hereunder and hereby elects to voluntarily enter into the Agreement and assume all of the risks of injury or property damage arising out of the use or operation of the Equipment, including without limitation those risks described and/or expressly assumed by Lessee herein; and Lessee further agrees to waive, release and discharge any and all claims for injury or property damage against LFG Specialties which Lessee may be otherwise entitled to assert.

9) CANCELLATION:

Order shall not be subject to cancellation or modification, either in whole or in part, without LFG Specialties' consent, and then only under terms that will reimburse the LFG Specialties for all applicable costs incurred, including but not limited, to costs of purchased materials, engineering and labor expenses, and a reasonable allowance for profit.

10) TITLES AND REMEDIES:

LFG Specialties reserves the title to all Equipment furnished hereunder. If the Lessee defaults in payment or performance or becomes subject to insolvency, receivership, or bankruptcy proceedings or makes any assignment for the benefit of creditors, or without the consent of the LFG Specialties voluntarily or involuntarily sells, transfers, leases or permits any lien or attachment on the Equipment delivered hereunder, LFG Specialties may treat all amounts then or thereafter owed by the Lessee to be immediately due and payable and LFG Specialties may repossess and Equipment by any means available under law.

11) LOSS AND DAMAGE:

Lessee assumes all risk of loss of and damage to the Equipment leased from any cause. No loss or damage to the Equipment leased shall impair any obligation of Lessee under this Agreement, which shall continue in full force and effect. In the event of loss of or damage to the Equipment leased, Lessee at the option of LFG Specialties shall:

a) Place the Equipment in good repair;
b) Replace the Equipment with like equipment in good repair, which equipment shall then become subject to this Agreement; or
c) Pay LFG Specialties in cash the Purchase Price as set forth in I.B "Price Schedule" of the Equipment Specification or as on any subsequent schedules which may be made a part of this lease. If no Purchase Price is listed the Purchase Price shall be fair market value of the equipment. Upon such payment this Agreement shall terminate with respect to the Equipment so paid for and Lessee then shall become entitled to the Equipment, as the owner of such property.

12) RETURN OF LEASED EQUIPMENT:

Upon termination of the lease period (as specified in I.C. above) Lessee shall return all Equipment to LFG Specialties in good repair, ordinary wear and tear resulting from proper use of such Equipment alone excepted, in the following manner as may be specified by LFG Specialties:

By loading Equipment at Lessee's cost on board such carrier as LFG Specialties shall specify and shipping the Equipment, freight collect, to Findlay, Ohio.

Such conditions for return of the leased Equipment are subject to Lessee's option to purchase the Equipment as set forth below in Condition 14.

13) INSURANCE:

Lessee will at all times prior to the return of the Equipment to LFG Specialties, at Lessee's own expense, carry and maintain: (i) all-risks property insurance for Equipment equal to the Purchase Price of the Equipment as set forth in I.B. of the Equipment Specification above or if no Purchase Price is listed in an amount specified by LFG Specialties; and (ii) public liability insurance for third party bodily injury, death, and personal and property damage, including contractual liability, with a combined single limit per occurrence and annual aggregate of not less than five million dollars ($5,000,000). Both policies shall be primary as to any other valid insurance available to LFG Specialties. LFG Specialties will be included as an additional insured for (i) and (ii) and a loss payee in (i) only. Lessee will furnish LFG Specialties evidence of such insurance prior to taking delivery of the Equipment. Such insurance must provide 30 days advance notice to LFG Specialties of cancellation. Lessee waives Lessee's rights and its insurance carriers' rights of subrogation against LFG Specialties for any and all damage.

If loss or damage occurs under circumstances in which Lessee is not in violation of the terms of any such policies, and if Lessee has fulfilled its obligations under the paragraph "Loss and Damage" of this Lease, and is not otherwise in default under this Lease, LFG Specialties will pay Lessee so much of any insurance proceeds received by LFG Specialties as the result of such loss as will fully reimburse Lessee for the net expenses it incurs in fulfilling its obligations under the paragraph "Loss and Damage."

14) OPTION TO PURCHASE:

LFG Specialties may grant to Lessee the option to purchase the Equipment leased in this Agreement, provided that Lessee gives 10 days notice to LFG Specialties, in writing, of its intention to exercise such option at any time during the term of this Lease, and provided further that Lessee's right to so purchase the Equipment is conditioned upon Lessee's complete performance of all the terms and provisions of this lease on its part to be performed, including full payment of the Purchase Price as specified in I.B in the Equipment Specification of this Lease or if no Purchase Price is specified a Purchase Price to be later quoted by LFG Specialties. Should Lessee exercise this option on receipt of the balance of the Purchase Price by LFG Specialties together with a sum equal to any new or applicable unpaid sales and use taxes, LFG Specialties will transfer title of such Equipment to Lessee, and will deliver, on Lessee's written request, written evidence of the transfer of such title.

Upon Purchase of Equipment whereby payment in full has been received by LFG Specialties, all applicable provisions of this Lease, which consist of: Warranties (Condition 2); limitations of LFG Specialties' liability contained in Damages (Condition 7); Indemnity (Condition 6); Assumption of Risk (Condition 8); made herein shall still apply to the purchased Equipment.

15) UCC FILINGS / POSSESSION AND TITLE:

The Equipment leased is and shall at all times remain the sole property of LFG Specialties. The Lessee shall have no right, title, or interest in such Equipment except as expressly set forth in this lease (which includes option to purchase).

Title to this Equipment is and shall remain in LFG Specialties unless Equipment is purchased by Lessee. Prior to any purchase of the Equipment, LFG Specialties, as owner of the equipment may (but is not required to) file any UCC or other legal filings as necessary to protect its ownership interest in Equipment.

16) LOCATION OF EQUIPMENT:

Lessee will not, without prior written consent of LFG Specialties, permit the Equipment leased to be removed from the location specified under "PROJECT REFERENCE" located on the cover-page of this Agreement.

17) PERSONAL PROPERTY:

The Equipment leased is, and shall at all times remain, personal property, notwithstanding that it or any part of it may now be, or may in the future become, in any manner attached to, or embedded in, or permanently resting on, real property or any building on such real property, or attached in any manner to what is permanent as by means of cement, plaster, nails, bolts, or screws.

18) CONFIDENTIALITY:

All proposals, drawings, design data and technical information developed and/or provided by the LFG Specialties shall be considered "Confidential" and the sole property of the LFG Specialties. All such information disclosed to the Lessee shall not be reproduced in whole, or in part, or used to furnish information to others, without the written permission of the LFG Specialties.

19) LESSEE'S DRAWINGS AND SPECIFICATIONS:

LFG Specialties is furnishing only the Equipment specified herein and does not assume any responsibility for other equipment and material not being supplied by LFG Specialties, or the effect thereof on the overall operation of the system of which the Equipment is a part. Accordingly, any comments from the LFG Specialties regarding Lessee's drawings are responsive only and LFG Specialties shall not be liable therefor.

20) DESIGN CHANGES:

While LFG Specialties reserves the right where possible, to include changes in design or material which are improvements, it cannot be responsible for including improvements, effected after beginning of production on Equipment. Design changes suggested by Lessee after beginning of production shall require LFG Specialties' agreement, including agreements as to price and shipping schedules.

21) MISCELLANEOUS:

A. "Applicable Law" The definition of terms used, interpretation of this Agreement and rights of parties hereto shall be construed under and governed by the laws of the State of Ohio, which include the Uniform Commercial Code of the State of Ohio.

B. "Acceptance" If this document constitutes an acceptance of an offer, such acceptance is expressly made conditional on Lessee's assent solely to the terms of this Agreement, and acceptance of any part of the Equipment or services covered hereunder shall be deemed to constitute such assent.

C. This Agreement is subject to change or prior sale of Equipment until accepted as an order by an officer of the LFG Specialties.
..

Terms and Conditions of Sales Rev001 05-06-11

Utility Flare Model PCFT828I6 (Rental Unit #2512)
Lease Agreement No. 021703
Date: February 15, 2017

This Agreement covers the purchase of a landfill methane flare system with control rack and related peripheral equipment from LFG Specialties (a CB&I company) (LFG) by Purchaser.

Bill-to Address (please fill in)	**Ship-to Address (please fill in)**
_____	_____
_____	_____
_____	_____
_____	_____
Attention: _____	**Attention:** _____
Phone: _____	**Phone:** _____
Fax: _____	**Fax:** _____

The terms and conditions set forth in this Agreement herein, which include the Equipment Specification and the Terms and Conditions of Sales, constitute the entire understanding of the parties relating to the goods and services provided for herein. All subsequent modifications to this Agreement shall not be effective unless they are in writing and signed by LFG Specialties.

TOTAL EQUIPMENT COST: **$** _____

START-UP AND TRAINING ASSISTANCE: **$** _____

ESTIMATED SHIPPING & HANDLING: **$** _____

OPTIONS SELECTED

_____ **$** _____

_____ **$** _____

_____ **$** _____

TOTAL ESTIMATED CONTRACT VALUE: **$** _____

IN WITNESS WHEREOF, the parties have caused this Agreement to be executed by their duly authorized representatives as of the month, day, and year set forth below.

LFG SPECIALTIES L.L.C.	PURCHASER
_____	SIGN: _____
_____	NAME: _____
_____	TITLE: _____
_____	DATE: _____
	P.O.#: _____

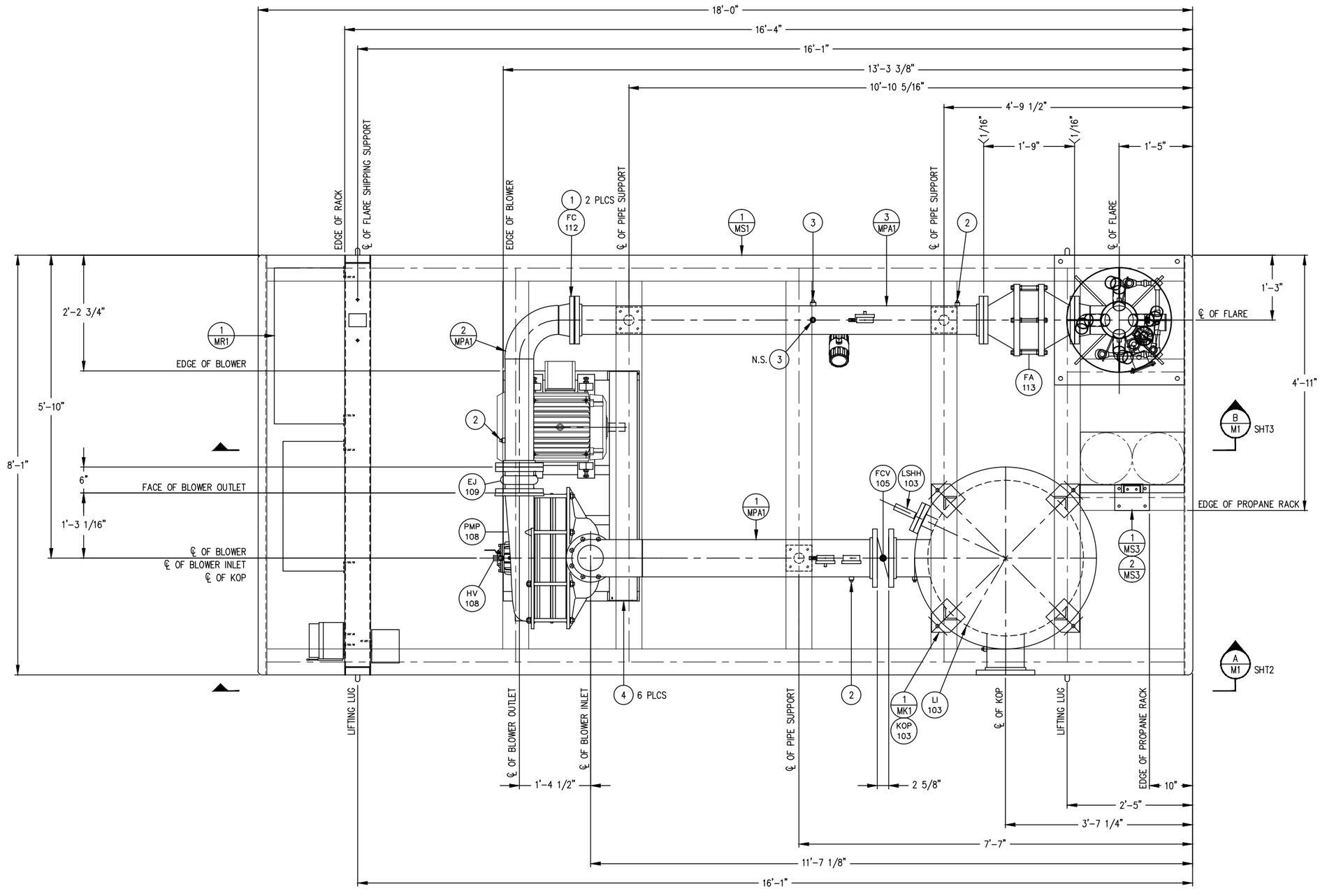

1 — PLAN VIEW
SCALE: 1" = 1'-0"

EST. WEIGHT – 9000#

APPROVED PROJECT MGR: ____ PROCUREMENT: ____ DATE: ____ DATE: ____

LFG Specialties, L.L.C.
16406 US ROUTE 224 E
FINDLAY, OH 45840-9761
TELEPHONE: (419) 424-4999
WEBSITE: www.shawgrp.com/lfgspecialties

THIS DRAWING REPRESENTS INTELLECTUAL PROPERTY OF LFG SPECIALTIES, L.L.C. ANY MODIFICATIONS TO THE ORIGINAL BY OTHER THAN LFG SPECIALTIES, L.L.C. PERSONNEL VIOLATES ITS ORIGINAL PURPOSE AND AS SUCH IS RENDERED VOID. LFG SPECIALTIES, L.L.C. WILL NOT BE HELD LIABLE FOR ANY CHANGES MADE TO THIS DOCUMENT WITHOUT THE EXPRESS WRITTEN CONSENT OF THE ORIGINATOR.

TOLERANCE:

WBS COST CODES:

REV	DESCRIPTION / ISSUE	DATE	BY
0	RELEASED FOR PURCHASING	03/22/2013	TRS

8" UTILITY FLARE
BLOWER SKID ASSEMBLY

DRAWN BY:	ENGINEER:	APPROVED BY:	SIZE:
T. SEAGRO	L. DERR	L. DERR	D

SCALE	DATE:	PROJECT NO:
AS SHOWN	03/18/2013	110157.00125246

PROJECT NAME: LANDFILL GAS UTILITY FLARE #PCFT82816
RENTAL UNIT
*

CUSTOMER: LFG SPECIALTIES

SERIAL NO: 2345
DWG NO: M1
SHT: 1 OF 4

File: O:\LFG\2300 DRAWINGS\2345 – Rental – PCFT82816\Mechanical\2345-M1.dwg Layout: SHT1 User: tom.seagro Oct 29, 2013 – 3:20pm

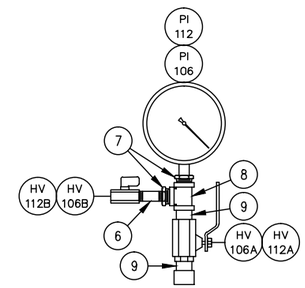

1 / M1 DETAIL – PI ASSEMBLY
SCALE: 3" = 1'-0"
SHT2 & 3

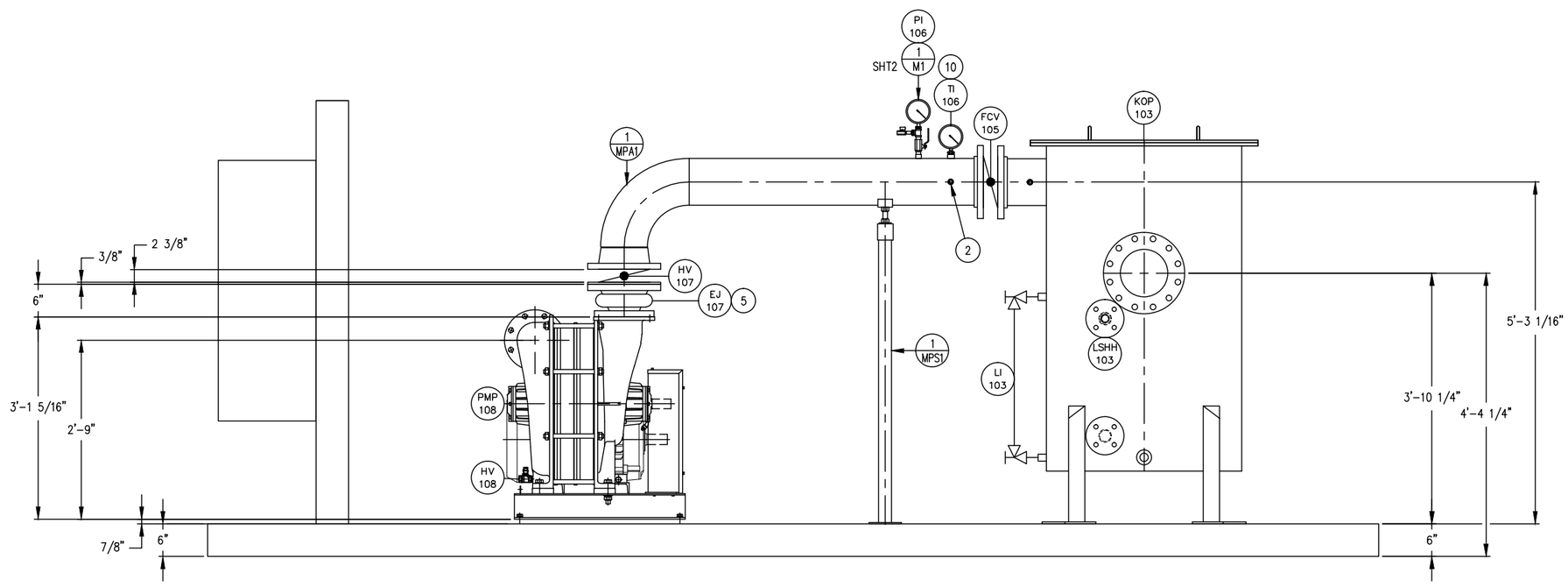

A / M1 SECTION – ELEVATION VIEW
SCALE: 1" = 1'-0"
SHT1

APPROVED PROJECT MGR: ____ PROCUREMENT: ____ DATE: ____ DATE: ____

LFG Specialties, L.L.C.
16406 US ROUTE 224 E
FINDLAY, OH 45840-9761
TELEPHONE: (419) 424-4999
WEBSITE: www.shawgrp.com/lfgspecialties

THIS DRAWING REPRESENTS INTELLECTUAL PROPERTY OF LFG SPECIALTIES, L.L.C. ANY MODIFICATIONS TO THE ORIGINAL BY OTHER THAN LFG SPECIALTIES, L.L.C. PERSONNEL VIOLATES ITS ORIGINAL PURPOSE AND AS SUCH IS RENDERED VOID. LFG SPECIALTIES, L.L.C. WILL NOT BE HELD LIABLE FOR ANY CHANGES MADE TO THIS DOCUMENT WITHOUT THE EXPRESS WRITTEN CONSENT OF THE ORIGINATOR.

TOLERANCE:

WBS COST CODES:

REV	DESCRIPTION / ISSUE	DATE	BY
0	RELEASED FOR PURCHASING	03/22/2013	TRS

8" UTILITY FLARE
BLOWER SKID ASSEMBLY

DRAWN BY:	ENGINEER:	APPROVED BY:	SIZE:
T. SEAGRO	L. DERR	L. DERR	D

SCALE	DATE:	PROJECT NO:
AS SHOWN	03/18/2013	110157.00125246

PROJECT NAME: LANDFILL GAS UTILITY FLARE #PCFT82816 RENTAL UNIT *

CUSTOMER: LFG SPECIALTIES

SERIAL NO: 2345
DWG NO: M1
SHT: 2 OF 4

File: O:\LFG\2300 DRAWINGS\2345 – Rental – PCFT82816\Mechanical\2345-M1.dwg Layout: SHT2 User: tom.seagro Oct 29, 2013 – 3:20pm

APPROVED PROJECT MGR: _____ DATE: _____

PROCUREMENT: _____ DATE: _____

C / M1 SECTION – FLOW METER
SCALE: 1 1/2" = 1'-0"
SHT3

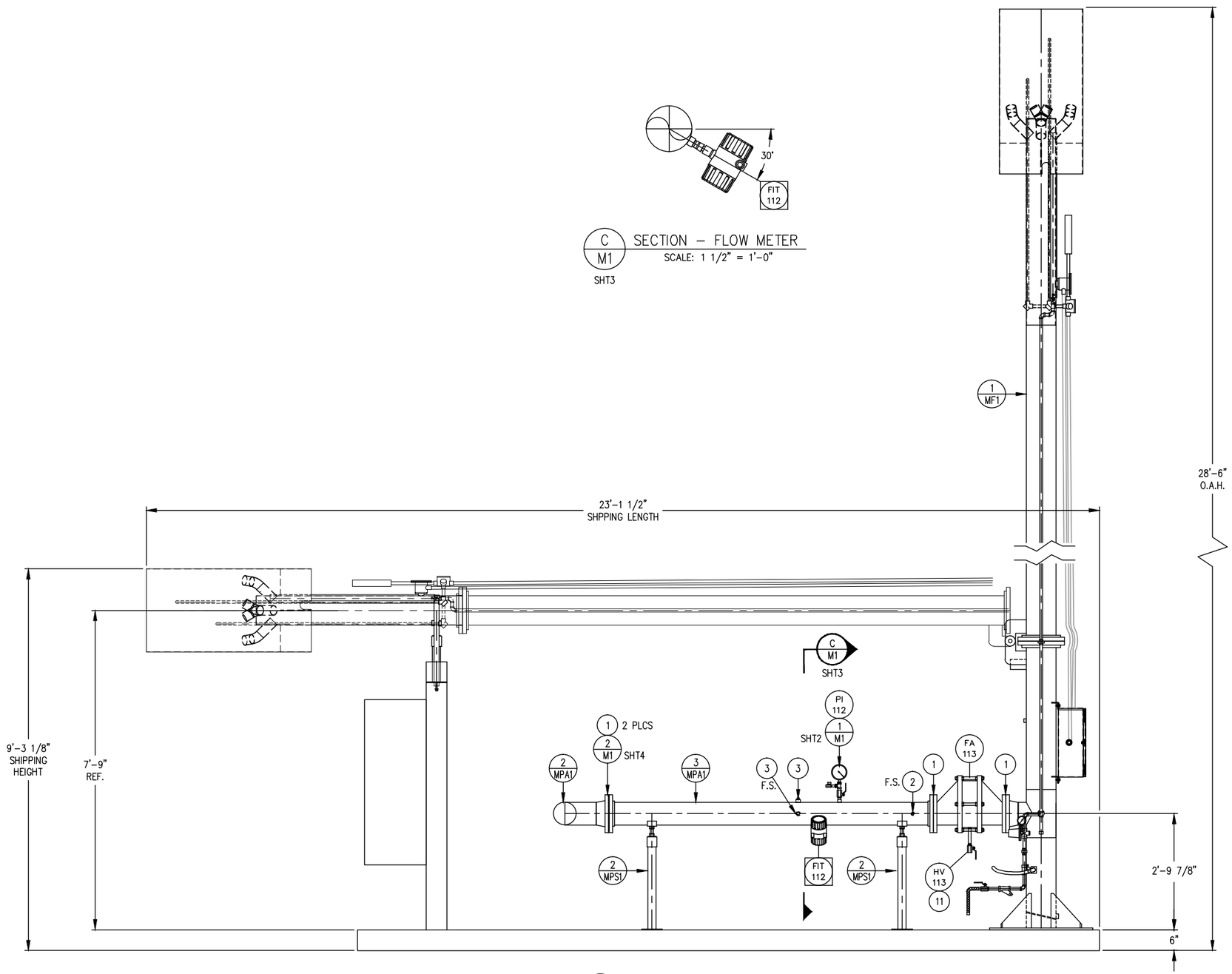

B / M1 SECTION – ELEVATION VIEW
SCALE: 3/4" = 1'-0"
SHT1

LFG Specialties, L.L.C.
16406 US ROUTE 224 E
FINDLAY, OH 45840-9761
TELEPHONE: (419) 424-4999
WEBSITE: www.shawgrp.com/lfgspecialties

THIS DRAWING REPRESENTS INTELLECTUAL PROPERTY OF LFG SPECIALTIES, L.L.C. ANY MODIFICATIONS TO THE ORIGINAL BY OTHER THAN LFG SPECIALTIES, L.L.C. PERSONNEL VIOLATES ITS ORIGINAL PURPOSE AND AS SUCH IS RENDERED VOID. LFG SPECIALTIES, L.L.C. WILL NOT BE HELD LIABLE FOR ANY CHANGES MADE TO THIS DOCUMENT WITHOUT THE EXPRESS WRITTEN CONSENT OF THE ORIGINATOR.

TOLERANCE:

WBS COST CODES:

REV	DESCRIPTION / ISSUE	DATE	BY
0	RELEASED FOR PURCHASING	03/22/2013	TRS

8" UTILITY FLARE
BLOWER SKID ASSEMBLY

DRAWN BY:	ENGINEER:	APPROVED BY:	SIZE:
T. SEAGRO	L. DERR	L. DERR	D

SCALE	DATE:	PROJECT NO:
AS SHOWN	03/18/2013	110157.00125246

PROJECT NAME: LANDFILL GAS UTILITY FLARE #PCFT82816
RENTAL UNIT
*

CUSTOMER: LFG SPECIALTIES

SERIAL NO: 2345
DWG NO: M1
SHT: 3 OF 4

File: O:\LFG\2300 DRAWINGS\2345 – Rental – PCFT82816\Mechanical\2345-M1.dwg Layout: SHT3 User: tom.seagro Oct 29, 2013 – 3:20pm

APPROVED PROJECT MGR: _____ DATE: _____

PROCUREMENT: _____ DATE: _____

BILL OF MATERIAL

ITEM	QTY	DESCRIPTION	SUPPLIER	PART NO.	INVENTORY AMOUNT
1	4	GASKET F-F NON-ASBESTOS 6"	LFG	WFG6NA	
2	3	PLUG SS 1/2"	LFG	FLOOR STOCK	
3	2	PLUG SS 3/4"	LFG	FLOOR STOCK	
4	6	VIBRATION PAD	LFG	VP35DUROMETER	
5	1	BACKING RING SS 8"	LFG	VFJBR838S	
6	2	PIPE NIPPLE SCH40 304SS 1/4" x 2" LG	LFG	FLOOR STOCK	
7	4	REDUCING BUSHING 150# SS 1/2" x 1/4" THRD	LFG	FLOOR STOCK	
8	2	TEE 150# SS 1/2" THRD	LFG	FLOOR STOCK	
9	4	PIPE NIPPLE SCH40 304SS 1/2" x 1 1/2" LG	LFG	FLOOR STOCK	
10	1	REDUCING BUSHING 150# SS 3/4" x 1/2" THRD	LFG	FLOOR STOCK	
11	1	PIPE NIPPLE SCH40 304SS 1/2" x 6" LG	LFG	FLOOR STOCK	

NOTES:

1. ALL BOLTS, CAP SCREWS AND NUTS WILL BE SAE GRADE 8 WITH YELLOW ZINC DICHROMATE PLATING. THREADED RODS WILL BE STAINLESS STEEL. ALL THREADS WILL BE UNIFIED NATIONAL COARSE.
2. ALL 1/8"-1 1/2" PIPES WILL BE STANDARD BLACK PIPE ASTM A53 OR ASTM A106. ALL 1/8"-1 1/2" PIPE NIPPLES WILL BE STANDARD BLACK PIPE ASTM A733.
3. ALL 1/8"-1 1/2" PIPE FITTINGS (ELBOWS, TEES, BUSHINGS & ETC.) WILL BE STANDARD (CLASS 150) WITH A BLACK FINISH.
4. EXTERNAL PIPE SURFACES TO BE BLASTED TO SP-7 SPECIFICATIONS, APPLIES TO CARBON STEEL PIPING ONLY.
5. ALL CARBON STEEL VESSELS, PIPE EXTERNALS AND STACK TO BE COATED WITH RUST PROHIBITING SHERWIN WILLIAMS B67R5 RED OXIDE RECOATABLE PRIMER AND FINISHED WITH A 3 MIL COAT OF SLATE GREY COLORED INDUSTRIAL ACRYLIC POLYURETHANE, SHERWIN WILLIAMS ACROLON 218 HS.
6. ALL PIPE BUTT WELD JOINTS WILL HAVE A 1/8" ROOT OPENING.
7. INSTALL GAUGES TO FACE CONTROL RACK SIDE.
8. A MINIMUM DISTANCE FROM POWER LINES AND STRUCTURES OF 4 TIMES THE STACK HEIGHT MUST BE MAINTAINED AROUND THE FLARE. IF THE DISTANCE IS NOT FEASIBLE, PLEASE CONTACT LFG SPECIALTIES ENGINEERING.
9. METRIC FASTENERS SHIPPED WITH BLOWER TO BE PAINTED A DIFFERENT COLOR.

LFG Specialties, L.L.C.
16406 US ROUTE 224 E
FINDLAY, OH 45840-9761
TELEPHONE: (419) 424-4999
WEBSITE: www.shawgrp.com/lfgspecialties

THIS DRAWING REPRESENTS INTELLECTUAL PROPERTY OF LFG SPECIALTIES, L.L.C. ANY MODIFICATIONS TO THE ORIGINAL BY OTHER THAN LFG SPECIALTIES, L.L.C. PERSONNEL VIOLATES ITS ORIGINAL PURPOSE AND AS SUCH IS RENDERED VOID. LFG SPECIALTIES, L.L.C. WILL NOT BE HELD LIABLE FOR ANY CHANGES MADE TO THIS DOCUMENT WITHOUT THE EXPRESS WRITTEN CONSENT OF THE ORIGINATOR.

TOLERANCE:

WBS COST CODES:

REV	DESCRIPTION / ISSUE	DATE	BY
0	RELEASED FOR PURCHASING	03/22/2013	TRS

8" UTILITY FLARE
BLOWER SKID ASSEMBLY

DRAWN BY:	ENGINEER:	APPROVED BY:	SIZE:
T. SEAGRO	L. DERR	L. DERR	D

SCALE	DATE:	PROJECT NO:
AS SHOWN	03/18/2013	110157.00125246

PROJECT NAME
LANDFILL GAS UTILITY FLARE #PCFT82816
RENTAL UNIT
*

CUSTOMER
LFG SPECIALTIES

SERIAL NO: 2345
DWG NO: M1
SHT: 4 OF 4

File: O:\LFG\2300 DRAWINGS\2345 - Rental - PCFT82816\Mechanical\2345-M1.dwg Layout: SHT4 User: tom.seagro Oct 29, 2013 - 3:20pm

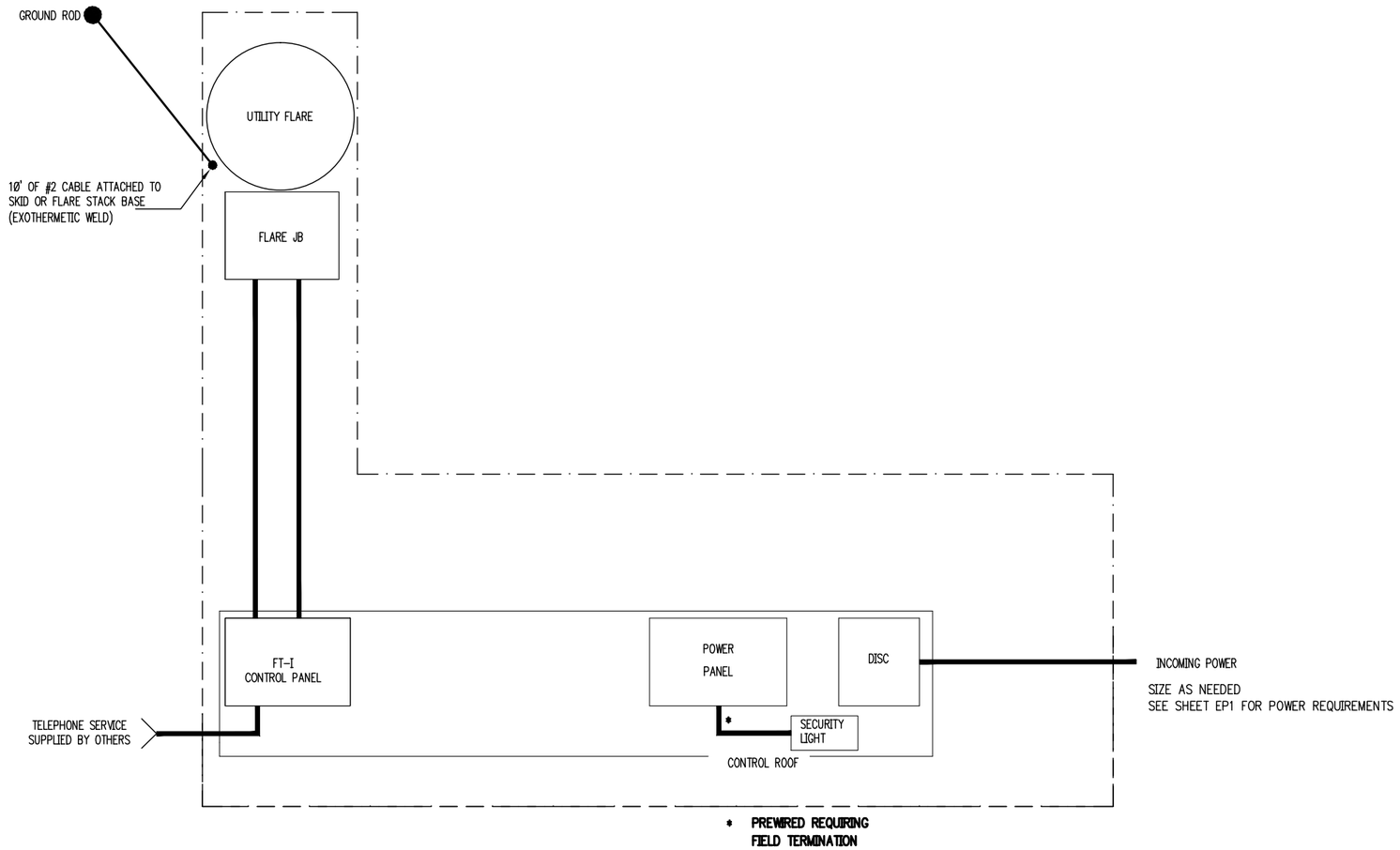

INSTALLER NOTES

1. KEEP FLEXIBLE CONDUIT LENGTHS BETWEEN 18"-36".
2. ALL SHIELD WIRES ARE TO BE TIED AT PANEL END ONLY
3. ALL CONTROL I/O SHALL BE #14 AWG THWN UNLESS OTHERWISE INDICATED.
4. BELDEN 8761 OR EQUIVELENT IS RECOMMENDED FOR ANALOG SIGNALS.
5. ALL CONDUCTORS ARE SIZED FOR LENGTHS OF 100' OR LESS.
6. TYPE "K" T/C CABLE IS RECOMMENDED TO BE OMEGA EXPP-K-20 OR EQUAL.
7. ALL GROUNDING CONDUCTORS SHALL NOT BE LESS THAN #12 AWG THHN.
8. ALL CONDUCTORS AND CONDUITS SHALL BE SIZED AND INSTALLED PER LOCAL, STATE & NATIONAL CODES.
9. ALL CONDUCTOR SIZING IS BASED ON THWN INSULATION.
10. ALL WIRING & METHOD SHALL BE SUITABLE FOR WET LOCATION.
11. SEAL-OFFS ARE REQUIRED ON ALL CONDUITS BELOW GRADE.
12. THE USE OF A COMMON GROUNDING SYSTEM IS REQUIRED, UTILIZING GROUND GRID(S) OR RODS AS REQUIRED BY ALL LOCAL, STATE, & NFPA/70 ARTICLE 250 AND IEEE-142 (GREEN BOOK) REGULATIONS. ADDITIONALLY, GROUND RESISTANCE OF 15 OHMS OR LESS NOT TO EXCEED 25 OHMS. 10' OF #2 COPPER WIRE PROVIDES SKID GROUNDING THROUGH EXOTHERMETIC WELD PROCCESS.
13. CONDUIT SEALS REQUIRED AT TRANSITION FROM CLASSIFIED TO NON CLASSIFIED LOCATION SEALS WILL BE PACKED AND POURED AFTER COMMISSIONING BY ELECTRICAL INSTALLERS.

WIRE COLOR CODE

DC	BLUE
120VAC	RED
NEUTRAL (120VAC)	WHITE
POWER CONNECTIONS	BLACK
EXTERNALLY POWERED	YELLOW
INTRINSICALLY SAFE	LT BLUE

CONDUIT NUMBERING SYSTEM

1ST DIGIT (REGION)
0= PRIMARY POWER SUPPLY
1= MOTOR CONTROL\POWER DIST.
2= FLARE CONTROL PANEL
3= BLOWER SKID
4= FLARING EQUIPMENT
5= GAS UTILIZATION EQUIPMENT #1
6= GAS UTILIZATION EQUIPMENT #2

2ND DIGIT (SIGNAL TYPE)
1= MOTOR & POWER DISTRIBUTION
2= DIGITAL
3= ANALOG
4= MIXED SIGNALS

3RD DIGIT & 4TH DIGITS (NUMBER OF CONDUIT IN A LOCATION)
I.E. 121 = 1ST DIGITAL CONDUIT TO LEAVE CONTROL/DISTRIBUTION AREA
122 = 2ND DIGITAL CONDUIT TO LEAVE CONTROL/DISTRIBUTION AREA
1111 = 11TH POWER CONDUIT TO LEAVE MCC/DISTRIBUTION AREA AREA

CONDUIT LEGEND

FIELD INSTALLED RIGID
FIELD INSTALLED FLEX CONDUIT
FUTURE RIGID (FIELD INSTALLED)
FUTURE FLEX (FIELD INSTALLED)

ITEMS SHOWN IN BOLD ARE FIELD INSTALLED.
INSTALLATION IS REQUIRED PRIOR TO EQUIPMENT STARTUP

LFG Specialties, L.L.C.
16406 US ROUTE 224 E
FINDLAY, OH 45840-9761
TELEPHONE: (419) 424-4999
WEBSITE: www.shawgrp.com/lfgspecialties

THIS DRAWING REPRESENTS INTELLECTUAL PROPERTY OF LFG SPECIALTIES, L.L.C. ANY MODIFICATIONS TO THE ORIGINAL BY OTHER THAN LFG SPECIALTIES, L.L.C. PERSONNEL VIOLATES ITS ORIGINAL PURPOSE AND AS SUCH IS RENDERED VOID. LFG SPECIALTIES, L.L.C. WILL NOT BE HELD LIABLE FOR ANY CHANGES MADE TO THIS DOCUMENT WITHOUT THE EXPRESS WRITTEN CONSENT OF THE ORIGINATOR.

TOLERANCE:

WBS COST CODES:

REV	DESCRIPTION / ISSUE	DATE	BY
0	AS FABRICATED	10/29/2013	TRS

FLAME-TROL I
SIMPLIFIED FIELD WIRING LAYOUT

DRAWN BY:	ENGINEER:	APPROVED BY:	SIZE:
T. SEAGRO	W. RINKER	L. DERR	D

SCALE	DATE:	PROJECT NO:
NONE	03/18/2013	110157.00125246

PROJECT NAME: LANDFILL GAS UTILITY FLARE #PCFT82816
RENTAL UNIT

CUSTOMER: LFG SPECIALTIES, L.L.C.

SERIAL NO: 2345
DWG NO: EW1
SHT: 1 OF 1

APPROVED
PROJECT E.E.: ____ DATE: ____
PROJECT MGR: ____ DATE: ____
PROCUREMENT: ____ DATE: ____

File: O:\LFG\2300 DRAWINGS\2345 - Rental - PCFT82816\Electrical\2345-EW1.dwg Layout: MASTER-EW1 User: tom.seagro Oct 29, 2013 - 3:31pm

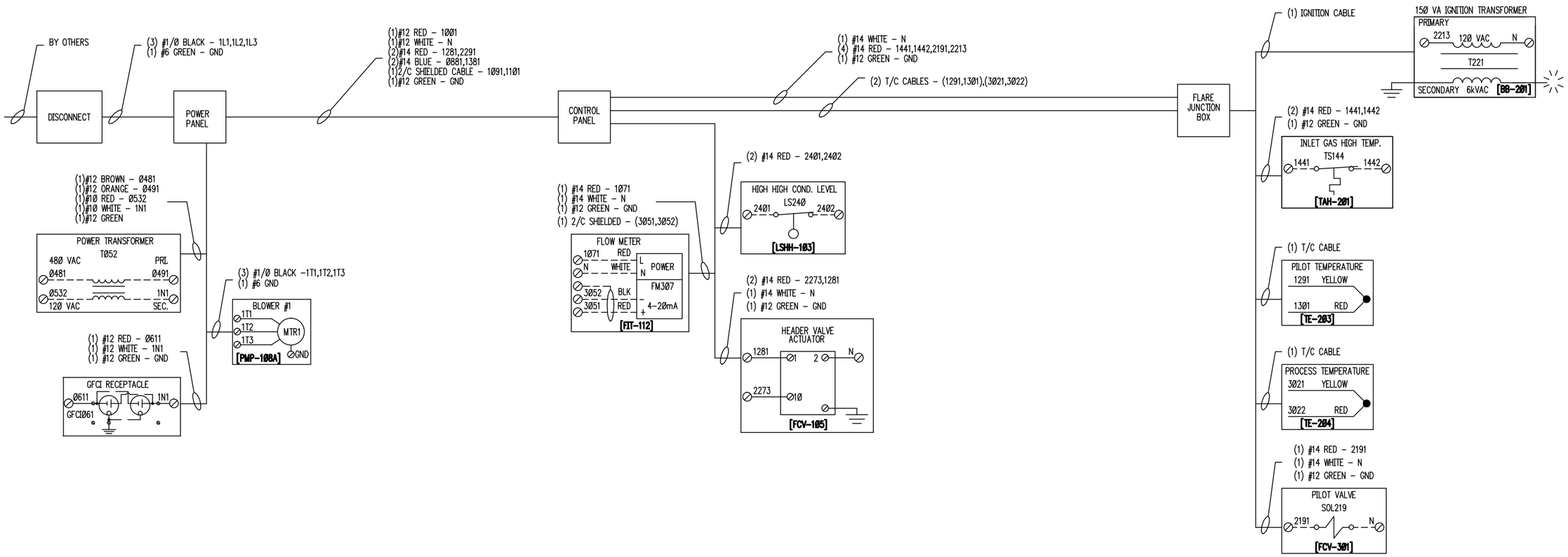

PROCUREMENT: _____ DATE: _____

PROJECT MGR: _____ DATE: _____

PROJECT E.E.: _____ DATE: _____

APPROVED

LFG Specialties, L.L.C.
16406 US ROUTE 224 E
FINDLAY, OH 45840–9761
TELEPHONE: (419) 424–4999
WEBSITE: www.shawgrp.com/lfgspecialties

THIS DRAWING REPRESENTS INTELLECTUAL PROPERTY OF LFG SPECIALTIES, L.L.C. ANY MODIFICATIONS TO THE ORIGINAL BY OTHER THAN LFG SPECIALTIES, L.L.C. PERSONNEL VIOLATES ITS ORIGINAL PURPOSE AND AS SUCH IS RENDERED VOID. LFG SPECIALTIES, L.L.C. WILL NOT BE HELD LIABLE FOR ANY CHANGES MADE TO THIS DOCUMENT WITHOUT THE EXPRESS WRITTEN CONSENT OF THE ORIGINATOR.

TOLERANCE:

WBS COST CODES:
MCC00500
ELE00500

REV	DESCRIPTION / ISSUE	DATE	BY
0	AS FABRICATED	10/29/2013	TRS

FLAME–TROL I
SHOP AND FIELD WIRING DIAGRAM

DRAWN BY:	ENGINEER:	APPROVED BY:	SIZE:
T. SEAGRO	W. RINKER	L. DERR	D

SCALE	DATE:	PROJECT NO:
AS SHOWN	03/18/2013	110157.00125246

PROJECT NAME: LANDFILL GAS UTILITY FLARE #PCFT82816
RENTAL UNIT

CUSTOMER: LFG SPECIALTIES, L.L.C.

SERIAL NO: 2345
DWG NO: EW2
SHT: 1 OF 1

File: O:\LFG\2300 DRAWINGS\2345 – Rental – PCFT82816\Electrical\2345-EW2.dwg Layout: MASTER-EW2 User: tom.seagro Oct 29, 2013 – 3:31pm

Appendix F
Permit Fees

Air Quality Management
Construction Permit Fee Calculator

Version 1
March 21, 2007

Check for permit fees **$777.50**
Check for advertisement fees [1] **$330.00**

Please submit two checks to the Department — one check for permit fees and one check for advertisement fees. Please make checks payable to "State of Delaware".

FUEL BURNING EQUIPMENT

Number of Units	Equipment List	Permit Fee per Unit	Calculated Fee
	Over 10 mmBTU/hr to 100 mmBTU/hr	$165.00	$0.00
	Over 100 mmBTU/hr to 250 mmBTU/hr	$390.00	$0.00
	> 250 mmBTU/hr	$1,290.00	$0.00
	Crematory	$165.00	$0.00
	Generator	$215.00	$0.00
	Poultry Incinerator	$215.00	$0.00
	Used Oil Heater	$170.00	$0.00

NOTE: Fuel burning equipment generally includes boilers and the equipment listed above. Oxidizers, flares, afterburners, and other control devices are classified as process equipment and are charged under the fee structure below for process equipment.

PROCESS EQUIPMENT

To calculate permit fees for process equipment, use the adjacent worksheets (Process Equipment Emission Calc). This worksheet will be automatically updated with the appropriate fees when information is entered on the adjacent worksheets.

Description	Permit Fee per Unit	Calculated Fee from adjacent worksheets
Maximum Allowable total (or combined) emissions less than or equal to 10 tons per year per unit	$215.00	$777.50
Maximum allowable total (or combined) emissions greater than 10 tons per year per unit	$215.00 + $2.50 per ton over 10 tons	

Note: Process equipment includes the process equipment and any add on control device for that equipment. Examples of process equipment include spray booths, crushers, silos, asphalt plants, chemical processes, etc.

VOLATILE ORGANIC COMPOUND (VOC) SYSTEMS

Number of Units	Equipment List	Permit Fee per Unit	Calculated Fee
	Gasoline Dispensing Facility	$120.00	$0.00
	Storage Vessel > 2,000 gallons	$150.00	$0.00
	Dry Cleaning Facility	$265.00	$0.00
	Waste Water Separator, each	$170.00	$0.00
	Degreaser	$180.00	$0.00
	Incinerator	$490.00	$0.00

Number of Units	OTHER	Permit fee per Amendment	Calculated Fee
	Amendment to existing permit	$175.00	$0.00

[1] A $165 advertisement fee is charged for each application submitted. For example, if applications are submitted for a 100 mmBTU/hr boiler and a 500 kW emergency generator, the advertisement fee will be $330 ($165 x 2). If applications are submitted for three 500 kW emergency generators, the advertisement fee will be $495 ($165 x 3).

INSTRUCTIONS

To use the fee calculator, enter the number of emission units in the left hand column (Column A) that corresponds to the type of emission unit.

For example, if you are requesting to install a crematory unit, enter "1" beside "crematory" in the equipment list.

If your application is for process equipment, use the "Process Equipment Calculation" spreadsheet(s).

To use the process equipment spreadsheet, enter the "expected actual emissions" in tons per year (tpy) as found on your permit application form, AQM-5. Individual HAP and VOC emissions need to be entered in the second table on the process equipment form to calculate total VOC and HAP emissions. One spreadsheet should be completed for each process.

For questions or comments on the fee calculator, please contact Joanna French in the Dover office at 302-739-9402 or by email at Joanna.French@state.de.us.

CALCULATED PERMIT FEE	417.5
ADVERTISEMENT FEE	165

Version 1
March 21, 2007

PROCESS EQUIPMENT WORKSHEET

Maximum Allowable Emissions Calculator

Air Contaminant	**Emissions**
Particulate Matter (PM)	1.6
Sulfur Oxides (SOx)	43.4
Nitrogen Oxides (NOx)	7.1
Carbon Monoxide (CO)	38.5
Lead	0
Total Volatile Organic Compounds (VOCs)	0.3
Total Hazardous Air Pollutants (HAPs)	0.18
Other emissions not previously classified	0
MAXIMUM ALLOWABLE EMISSIONS = (rounded to nearest ton)	**91**

NOTE: To calculate cumulative emissions, place emissions for each air contaminant (above) in the table. These emissions need to be in tons per year to correctly calculate the emissions. Permit fees are based on allowable emissions. Allowable emissions are emissions that will be placed in the permit and are found in the AQM-5 application form in the last column "expected annual emissions." To determine total VOC or HAP emissions place the emissions of each individual VOC or HAP in the spreadsheet below.

CALCULATE TOTAL VOC AND HAP EMISSIONS

VOC	**EMISSIONS**
VOC 1	0.3
VOC 2	0
VOC 3	0
VOC 4	0
VOC 5	0
VOC 6	0
VOC 7	0
VOC 8	0
VOC 9	0
VOC 10	0
TOTAL VOCs	**0.3**

HAP	**EMISSIONS**
HAP 1	0.18
HAP 2	0
HAP 3	0
HAP 4	0
HAP 5	0
HAP 6	0
HAP 7	0
HAP 8	0
HAP 9	0
HAP 10	0
TOTAL HAPs	**0.18**

NOTE: If an air contaminant is classifed as both a VOC and a HAP, please place emissions from that air contaminant in the HAP category ONLY. Placement of emissions from that air contaminant in both categories will "double count" emissions and increase your permit fees unnecessarily.

CALCULATED PERMIT FEE	360
ADVERTISEMENT FEE	165

Version 1
March 21, 2007

PROCESS EQUIPMENT WORKSHEET

Maximum Allowable Emissions Calculator

Air Contaminant	**Emissions**
Particulate Matter (PM)	1.2
Sulfur Oxides (SOx)	32.5
Nitrogen Oxides (NOx)	5.3
Carbon Monoxide (CO)	28.9
Lead	0
Total Volatile Organic Compounds (VOCs)	0.2
Total Hazardous Air Pollutants (HAPs)	0.14
Other emissions not previously classified	0
MAXIMUM ALLOWABLE EMISSIONS = (rounded to nearest ton)	**68**

NOTE: To calculate cumulative emissions, place emissions for each air contaminant (above) in the table. These emissions need to be in tons per year to correctly calculate the emissions. Permit fees are based on allowable emissions. Allowable emissions are emissions that will be placed in the permit and are found in the AQM-5 application form in the last column "expected annual emissions." To determine total VOC or HAP emissions place the emissions of each individual VOC or HAP in the spreadsheet below.

CALCULATE TOTAL VOC AND HAP EMISSIONS

VOC	**EMISSIONS**
VOC 1	0.2
VOC 2	0
VOC 3	0
VOC 4	0
VOC 5	0
VOC 6	0
VOC 7	0
VOC 8	0
VOC 9	0
VOC 10	0
TOTAL VOCs	**0.2**

HAP	**EMISSIONS**
HAP 1	0.14
HAP 2	0
HAP 3	0
HAP 4	0
HAP 5	0
HAP 6	0
HAP 7	0
HAP 8	0
HAP 9	0
HAP 10	0
TOTAL HAPs	**0.14**

NOTE: If an air contaminant is classifed as both a VOC and a HAP, please place emissions from that air contaminant in the HAP category ONLY. Placement of emissions from that air contaminant in both categories will "double count" emissions and increase your permit fees unnecessarily.

LANDFILL GAS ODOR CONTROL SYSTEM
PERMIT APPLICATION
for the
DRY WASTE LANDFILL AT NEW CASTLE, DELAWARE
LANDFILL CELLS 1, 2, and 3

Submitted to:

Mr. Darryl Tyler
Delaware Department of Natural Resources
and Environmental Control
Air Quality Management Section
89 Kings Highway
Dover, Delaware 19903

Prepared for:

Delaware Recyclable Products, Inc.
201 Marsh Lane Suite 200
New Castle, Delaware 19720
(302) 655-1360

Prepared by:

SCS Engineers
11260 Roger Bacon Drive
Reston, Virginia 22090
(703) 471-6150

June 30, 1994
File No. 0294005.00

SCS ENGINEERS

June 30, 1994
File No. 0294005

N. Howard Burns
District Manager - Delmarva District
Sanifill, Inc.
2 Eaton Street
Suite 902
Hampton, Virginia 23669

Subject: Landfill Gas Odor Control System - Permit Application Package
Delaware Recyclable Products, Inc. (DRPI)
Dry Waste Landfill - New Castle, Delaware

Dear Howard:

SCS is pleased to submit the attached application package for a Permit to Construct the proposed Landfill Gas Odor Control System at the DRPI Dry Waste Landfill in New Castle, Delaware. This permit application package was prepared to meet the submission requirements of the Delaware Department of Natural Resources and Environmental Control (DNREC). A permit fee of $215 must accompany the application. Sanifill should forward this application package to the attention of Mr. Darryl Tyler in the Air Quality Management Section at the following address:

DNREC
89 Kings Highway
Dover, Delaware 19903

The permit application package is comprised of the following components:

- Delaware DNREC Form AR-2 - Application for Combustion Equipment Permit
- Flare Emissions Calculations
- Design Criteria Memorandum
- Draft Operations Manual
- Permit Specifications
- Permit Drawings (three sheets)

DRPI Cells 1, 2, & 3 LFG Odor Control System

CONTENTS

ATTACHMENT A - DELAWARE DNREC FORM AR-2 - APPLICATION FOR COMBUSTION EQUIPMENT PERMIT

ATTACHMENT B - FLARE EMISSIONS CALCULATIONS

ATTACHMENT C - DESIGN CRITERIA MEMORANDUM

ATTACHMENT D - DRAFT OPERATIONS MANUAL

ATTACHMENT E - PERMIT SPECIFICATIONS

ATTACHMENT F - PERMIT DRAWINGS (Three Sheets)

STATE OF DELAWARE
DEPARTMENT OF NATURAL RESOURCES
AND ENVIRONMENTAL CONTROL
AIR RESOURCES SECTION
89 KINGS HIGHWAY
DOVER, DELAWARE 19903

'ATION FOR COMBUSTION EQUIPMENT PERMIT (Complete in Duplicate)
AR-2)

1. Name of Plant or Establishment: Delaware Recyclable Products, Inc		Date of Application: June 30, 1994	Division Use Only Registration No.
Mailing Address (Street or P.O. Box): 201 Marsh Lane, Suite 200	City: New Castle	County: New Castle	Zip Code: 19720
2. Name of Owner: Sanifill			
Mailing Address (street or P.O. Box) 2 Eaton Street, Suite 902	City: Hampton	State: Virginia	Zip Code: 23669
3. Name of Person Signing This Application: N. Howard Burns	Title: District Manager	Phone: 804-723-5273	
4. Major Activity at This Location:	__ Manufacturing __ Governmental	X Commercial __ Institutional	__ Apartment __ Power Generation
Describe Major Activity: Dry Waste Landfill			SIC Code: 4953
5. Equipment to be Permitted: New X	Replacement __	Modification (See Page 2) __	Existing __
Manufacturer: Unknown, pending contractor procurement	Model No.: Unknown, pending contractor procurement	Rated Heat Input (BTU/Hr): 15.7MM Minimum	Firing Rate Maxim
6. Type Fuel: Landfill Gas (±45% CH4)	% Sulfur 0.05	% Ash	Heat Content (BTU/Gal., CF, Lb.): $450 \frac{BTU}{CF}$ (HHV)	Annual Fuel Consumption: 306 MM CF
Method of Firing or Feeding:		7. Type Combustion Controls: __ On-Off __ Modulating X High-low	
8. Oil Preheat Yes __ No X	Method		Temperature °F
9. Combustion Efficiency Monitoring Devices Yes __ No X			Type
10. Source of Make-Up Combustion Air to Boiler Room Yes __ No X			Describe Method
11. Operating Schedule 24 Hr./Day	7 Day/Wk.	52 Wk./Yr.	
12. Stack Height 20 Ft. (Above Grade)	Inside Diameter at Outlet 18 inches		Exit Gas Temperature 1400 °F
Draft X Natural __ Mechanical	Exit Gas Flow Rate 19,185 ACFM with 100% excess air at windshroud tip		Exit Gas Velocity 181 Ft./Sec. at windshroud tip
Fan N/A Induced Draft __ Forced Draft	Mfr.		Capacity CFM @ °F

CERTIFICATE OF APPLICANT

I HEREBY CERTIFY THAT THE APPLICANT IS:

☐ a Delaware resident residing therein at: _____

_____

or

☐ a nonresident residing at: _____

but owning property in Delaware at: _____

_____

or

☒ a Delaware corporation, whose registered agent in accordance wit
8 Del. C. §132 is: 201 Marsh Lane, Suite 200
address: New Castle Delaware
Delaware Recyclable Products, Inc

or

☐ a foreign corporation organized in the State of _____
and authorized to do business in the State of Delaware pursu
to 8 Del. C. §371, whose registered agent in the State of
Delaware is: _____
address: _____

or

☐ a partnership, firm or association, with certificate on file wit
the Prothonotary of _____ County in the State of
Delaware, recorded in Book _____ at Page _____ in accorda
with 6 Del. C. §3101.

or

☐ other: _____

Matthew P. Williams

Facility Manager

ON SUBMITTED COPIES TO DNREC

Matthew P. Williams

James W. Stenborg
(typed or printed name)

District Engineer
(typed or printed title)

201 Marsh Lane, Suite 20
(Address)

New Castle Delaware 1972

James W. Stenborg
Signature

SCS ENGINEERS
1260 Roger Bacon Drive
Reston, Virginia 22090
703 471-6150
FAX 703 471-6676

JOB 29400 S - DRPI
SHEET NO. _____ OF 5
CALCULATED BY ZED DATE 6/13/94
CHECKED BY ERP DATE 6·18·94
SCALE _____

DRPI - DRY WASTE LANDFILL, NEW CASTLE, DE
PERMANENT CANDLE FLARE EMISSIONS

A.) CONDITIONS/ASSUMPTIONS

1.) ESTIMATED LANDFILL GAS (LFG) FLOW RATE = 582 CFM

2) ESTIMATED LFG TEMPERATURE @ FLARE INLET = 80°F

3) AVERAGE LFG COMPOSITION:

STATIC CONDITIONS:
CH_4 = 53% O_2 = <1%
CO_2 = 43% H_2S = 840 ppm
N_2 = 4%

ASSUME ACTIVE CONDITIONS:
CH_4 = 45% O_2 = <2%
CO_2 = 35% H_2S = 500 ppm
N_2 = 16% H_2O = 2%

4) ASSUMED LFG FLARE DESTRUCTION EFFICIENCY = 98%

* ESTIMATED LFG FLOW RATE, TEMPERATURE & COMPOSITION ARE BASED ON FIELD INVESTIGATIONS & DESIGN CALCULATIONS PERFORMED BY SCS ENGINEERS IN JUNE 1994

* THE DESTRUCTION EFFICIENCY IS BASED ON ESTIMATES FOR CANDLE FLARES PRESENTED IN EPA PUBLICATION EPA-450/3-90-011A, "AIR EMISSIONS FROM MUNICIPAL SOLID WASTE LANDFILLS - BACKGROUND INFORMATION FOR PROPOSED STANDARDS & GUIDELINES".

SCS ENGINEERS
1260 Roger Bacon Drive
Reston, Virginia 22090
703 471-6150
FAX 703 471-6676

JOB -9400S - DRPI
SHEET NO. 3 OF 5
CALCULATED BY RED DATE 6/15/94
CHECKED BY ERP DATE 6.18.94
SCALE

DRPI - DRY WASTE LANDFILL - CANDLE FLARE EMISSIONS

C) EMISSION RATES (AFTER COMBUSTION)

1.) $CH_4 = (638\ lb/HR)(1 - 0.98) = 12.76\ lb/HR$

2.) $CO = \left(\frac{23\ lb\ CO}{10^6\ FT^3\ LFG}\right)(582\ CFM)(60\ MIN/HR) = 0.80\ lb/HR$

$582\ \frac{FT^3}{MIN} \times 60\ \frac{MIN}{HR} \times 450\ \frac{BTU}{FT^3} = 15.7\ MM\ BTU/HR$

$= 0.80\ \frac{lb}{HR} \times \frac{HR}{15.7\ MM\ BTU} = \frac{0.051\ lb\ CO}{MM\ BTU}$

3) $NO_x = \left(\frac{27\ lb\ NO_x}{10^6\ FT^3\ LFG}\right)(582\ CFM)(60\ MIN/HR) = 0.94\ lb/HR$

$= 0.94\ \frac{lb}{HR} \times \frac{HR}{15.7\ MM\ BTU} = \frac{0.060\ lb\ NO_x}{MM\ BTU}$

4.) $H_2S = (1.51\ lb/HR)(1 - .98) = 0.030\ lb/HR$

$= (0.03\ lb/HR) \times \frac{1}{15.7} = \frac{0.002\ lb}{MM\ BTU}$

5.) $SO_2 = (1.51\ lb/HR)(.98)\left(\frac{64\ lb\ SO_2/lb.mole}{34\ lb\ H_2S/lb.mole}\right) = 2.79\ lb/HR$

$= 2.79\ \frac{lb}{HR} \times \frac{HR}{15.7\ MM\ BTU} = \frac{0.177\ lb}{MM\ BTU}$

* THE CO EMISSION RATE OF 23 lb CO/MM FT^3 OF LFG & THE NOx EMISSION RATE OF 27 lb NOx/MM FT^3 OF LFG ARE BASED ON THE SOUTH COAST AIR QUALITY MANAGEMENT DISTRICT - LANDFILL GAS CONTROL SYSTEMS, DATED AUG. 18, 1989, TABLE 9-6: "TYPICAL EMISSION FACTORS FOR LANDFILL GAS FLARE"

SCS ENGINEERS
1260 Roger Bacon Drive
Reston, Virginia 22090
703 471-6150
FAX 703 471-6676

JOB 294005 - DRPI
SHEET NO. 5 OF 5
CALCULATED BY RED DATE 6-16-94
CHECKED BY ERP DATE 6.18.94
SCALE

DRPI - DRY WASTE LANDFILL - FLARE CALCS

5) AT 18" Φ WINDSHIELD T.D, EXIT GAS FLOW W/ 100% EXCESS AIR = 19,185 ACFM

$$\text{VELOCITY} = Q/A = 19{,}185 \frac{FT^3}{MIN} \times \frac{1\,MIN}{60\,SEC.} \times \frac{1}{\pi\left(\frac{18\,IN}{12}\right)^2}$$

$$= 319.8 \frac{FT^3}{SEC} \times \frac{1}{\pi(.75)^2\,FT^2}$$

$$= 181\ FT/S$$

CONTENTS

Description — Page

INTRODUCTION 1

Background 1
Objectives 1

STATIC FIELD TEST PROGRAM 2

LFG Test Probes 2
Field Monitoring Program 2
Laboratory Analyses 3

LFG GENERATION AND RECOVERY RATES 3

Refuse Filling History 3
Landfill Volume 4
LFG Generation and Recovery Rates 4

VERTICAL EXTRACTION WELL DEPTH AND SPACING 5

Extraction Well Depth 5
Extraction Well Spacing 6

LFG COLLECTION HEADER PIPE SIZING 6

CONDENSATE PRODUCTION AND CONTROL 6

TRACE CONSTITUENTS 7

LFG TREATMENT SYSTEM 7

Blower Station 8
Flare 8

STATIC FIELD TEST PROGRAM

SCS conducted a field test program at the landfill on May 31 and June 1, 1994. The purpose of this test program was to obtain information as to waste composition, liquid levels, and LFG quality and quantity that would prove useful in finalizing the LFG collection system design and treatment method. Such information was obtained from LFG test probes installed in the landfill. "Static" monitoring (i.e., measuring LFG conditions without active extraction of the gas) was conducted at the probes. Results of static monitoring (e.g., methane content, subsurface pressure, and temperature) are compared to static results from other landfills to estimate the LFG generation potential.

LFG Test Probes

SCS contracted with A.C. Schultes, Inc. of Woodbury, New Jersey, to drill and install three new test probes, one in each of the landfill cells. These probes were installed on May 31 and June 1, 1994 to visually characterize the refuse cuttings, to monitor gas quality, and to measure liquid levels.

The probes were set in 6-inch borings approximately 38 feet deep. A 1-inch Schedule 40 PVC pipe with 20-slot perforations on the bottom 30 feet was installed. The probes were backfilled with No. 1 washed pea gravel and sealed using a 12-inch thick bentonite pellet plug. A labcock valve was installed at the top of the probe to allow for monitoring and sampling activities. Test probe locations, a typical probe detail, and well boring logs developed by the SCS representative on site are presented in Appendix A. A copy of A.C. Schultes' report, including well permits, well completion reports, and the driller's logs, is also included in Appendix A.

SCS visually characterized the borehole cuttings during the drilling activities. The thickness of the dry, clayey cover soil ranged from 1 to 2 feet. The cuttings were comprised primarily of dry, black, shredded wood material throughout the full depth of the probe.

Field Monitoring Program

Two rounds of LFG monitoring at the new test probes were conducted during the static field test program. LFG quality and pressure were measured with a GEM-500 Infrared Landfill Gas Analyzer. Hydrogen sulfide concentrations were measured using an Industrial Scientific HS267 permissible hydrogen sulfide monitor for concentrations above 1 part per million (ppm). SCS measured liquid levels in the test probes with an electronic water level indicator shortly after well completion. Note that liquid level readings taken then are often inaccurate. A followup round of liquid levels readings is necessary. Summarized results for LFG composition, pressure, temperature, and liquid levels are presented below, while the complete monitoring data form is included in Appendix B.

1983 - 1990	Waste receipts assume a 10 percent annual increase in tonnage per year;
1991 - 1993	Waste receipts are from the annual operations report;
1994	Waste receipts are projected to remain at the 1993 tonnage;

REFUSE FILLING HISTORY

Year	Annual Tonnage	Year	
1983	71,000	1989	125,000
1984	78,000	1990	137,000
1985	86,000	1991	147,900
1986	94,000	1992	190,200
1987	104,000	1993	237,400
1988	114,000	1994	237,400
		Total =	1,621,900

Landfill Volume

The landfill's in-place waste volume was calculated using a top surface topography from the September 24, 1993 aerial survey by Atlantic Aerial Surveys and a bottom surface equal to an elevation of 20 feet. Based on the above, the landfill waste volume was estimated to be 3,100,000 cubic yards at the time of the survey. This volume was converted to waste tonnage assuming an average in-place refuse density of 850 pounds of refuse per cubic yard (lbs/cy). The estimated waste in-place, per these volume calculations, is 1,317,000 tons which correlates well with the cumulative tonnage through the year 1993 of 1,384,500 tons shown in the fill history table above. Detailed calculations for the refuse fill history and landfill airspace volume estimate are included in Appendix D.

LFG Generation and Recovery Rates

SCS estimated LFG generation and collection rates for the landfill based on the static monitoring results and historical data for actual pump tests performed on municipal solid waste landfills. LFG generation from a dry waste landfill is expected to be lower than that for an MSW landfill. This expectation was borne out by the static monitoring results. Specifically, pressures less than or equal to 0.1-inch w.c., and temperatures less than 80°F indicate slow microbial activity necessary to produce LFG (compared to gas

Extraction Well Spacing

For odor control using vertical wells, it was assumed that the effective radius of influence of each extraction well would be about three times the well depth (a well depth of 45 feet would correspond to a radius of influence of 135 feet). Ideal spacing of the extraction wells on the vertices of an equilateral triangle (to optimize the zone of influence overlap) results in an average well spacing of approximately 230 feet. Extraction wells of shallow depths will be spaced closer together while extraction wells of greater depths will be spaced farther apart.

LFG COLLECTION HEADER PIPE SIZING

The header collection piping which delivers the LFG to the blower station will be sized considering the head losses throughout the piping network to minimize the vacuum requirements of the blower system, without oversizing the piping. The extraction blower and header piping will be designed in coordination to deliver a minimum of 10 inches of water column (in.-w.c.) of vacuum to each extraction wellhead in the odor control system.

Criteria that will control the sizing of header piping follows:

- **Gas Velocity** — Design gas velocities will not exceed 2,000 feet per minute.
- **Unit Head Loss** — Head losses in any given section of piping will be standardized to a 100 foot section which shall not have head losses in excess of one inch of water column.
- **Future Expansion** — Header piping in the blower/flare station will be oversized to allow for future expansion and increased flows of up to 40 percent.
- **Maximum Design Case Analysis** — The loop configuration allows gas flow in two directions to the blower station. Header sizing assumed worst case conditions for flow in one direction that could be caused by closed valves to isolate a section for repair.

Header pipe sizing calculations are included in Appendix E.

CONDENSATE PRODUCTION AND CONTROL

Condensate is formed as LFG extracted from the landfill cools in the header piping. This condensate is collected via condensate traps installed at low points in the collection header system. The issue of condensate disposal is not addressed in the Delaware Solid Waste regulations; however, it was assumed that condensate would be collected and disposed of as leachate.

to provide thermal destruction as the proposed LFG treatment system at the landfill. The concentrations of methane measured are considered to be sufficient to sustain combustion. Candle flares have been commonly used on landfills for over 15 years and destruction efficiencies are well documented in the literature.

Blower Station

Based on the estimated LFG generation rate and other criteria discussed above, the blower station will be specified as follows:

- Two blowers — one active and one standby to provide for redundancy and expansion, each able to deliver the design flow rate. Normal operation will involve one blower running well within the design flow range. Full redundancy is provided by the other blower in the event of downtime (due to maintenance, etc.), and is consistent with the objectives of the system (i.e., odor control).
- Use industrial grade, centrifugal blowers (e.g., Lamson or Hoffman) to provide a wide range of flows and long-term service.
- Blower capacity greater than 582 cfm at approximately 45 in.-w.c. total head (see blower curve in Appendix D).
- 10 HP TEFC motor wired for 230/460V, 3 phase service.
- Cyclonic moisture separator/filter to maximize condensate removal upstream of the blowers to minimize corrosion.

Flare

The flare is intended to be a candle-type with a 10-inch diameter stack sized to handle a capacity of 815 cfm of LFG, which is 40 percent more than the maximum estimated LFG generated from Cells 1, 2, and 3 after closure. Due to the hydrogen sulfide concentrations measured in the LFG, the flare shall have a stainless steel flare tip, upper stack, and pilot/ignition assemblies. In addition a flame monitoring system will be necessary to automatically shut off the flow of LFG (via blower shutdown and inlet valve closure) in the event of flame outage. Candle flares are normally monitored via thermocouples to detect the flame; however, it takes several minutes for the thermocouple to cool and activate shutdown following flame outage. Therefore, a UV scanner or infrared sensor will be required to monitor the flame and signal a shutdown in case of flame outage.

CONTENTS (continued)

Description	Page
MONITORING	8
Extraction Well Monitoring	8
Blower/Flare Station and Condensate Monitoring	8
MONITORING SCHEDULES	9
Extraction System	9
Blower/Flare Station	9
Monitoring Schedule Summary	10
SYSTEM INSPECTION	10
TROUBLESHOOTING	11
Flare - Loss of Ignition	11
LFG Extraction Well Adjustment Procedures	12
Significantly Reduced Vacuum/Flow Rate: Isolated Occurrence	13
Significantly Reduced Vacuum/Flow Rate: Serial Occurrence	14
Surging Vacuum/Flow	14
Reduced Methane Content From Extraction Wells	14
Increased Oxygen Content From Extraction Wells	14
Landfill Fire	15
Odors	15
Potential Problem Areas	15
SUMMARY OF MAINTENANCE REQUIREMENT	16

Appendices

A. Well Head Assembly and Monitoring Ports
B. Blower/Motor
C. Butterfly Valves
D. Check Valves
E. Flame Arrester
F. Flare
G. Data Forms

INTRODUCTION

Landfill gas (LFG) is a product of the natural biological decomposition of organic material contained in wastes deposited in landfills. The organic materials typically include paper, grass cuttings, food wastes, etc. in a municipal solid waste (MSW) landfill. A dry waste landfill such as DRPI, however contains significantly less organic material (mostly wood), and therefore generates less LFG and at a slower rate than an MSW landfill. In a landfill environment, buried organic materials initially undergo aerobic decomposition. As oxygen contained in the refuse is depleted, anaerobic decomposition processes commence. The production of methane (a principle component of LFG) by methanogenic bacteria begins shortly thereafter, and continues for many years. The LFG which results from anaerobic decomposition is predominantly methane (CH_4) and carbon dioxide (CO_2).

Methane is a colorless, odorless gas that is potentially explosive at concentrations between 5 and 15 percent by volume in air (the explosive limits for methane) and when in the presence of oxygen and a source of ignition. In addition, trace constituents in LFG, such as hydrogen sulfide, can create an odor nuisance as LFG vents through the landfill surface. Production of LFG creates a positive pressure within the landfill; this pressure acts as a driving force (convection), which can cause LFG migration into surrounding soils and through the landfill surface. In addition, a concentration gradient can cause diffusive flow of LFG away from the landfill (i.e., LFG flows from areas of high pressure or concentration to areas of low pressure or concentration).

The primary concern at the DRPI landfill are odors caused by the emission of H_2S in LFG through the landfill surface. Accordingly, LFG collection facilities at the DRPI Dry Waste Landfill are intended to control LFG odors. These facilities include a LFG collection system, a blower/flare station, and a condensate handling system. The blower/flare station withdraws LFG from the landfill via a collection system, which consists of two main header loops connecting 31 extraction wells. The blowers supply the extracted LFG to the flare for combustion. The condensate handling system collects the condensate formed by the pressure changes induced by the blowers and the cooling of the extracted LFG as it passes through the header piping in the system.

A routine maintenance/monitoring program is required to adequately maintain efficient LFG collection and flaring. Over time, adjustments of the extraction well rates is necessary. The need for adjustment is indicated through routine monitoring of the extraction wells and a noticeable increase in odors surrounding the landfill. Extraction well measurements also reveal operational problems such as obstructions in the header pipe system connecting the extraction wells to the blower/flare station. In addition to extraction well adjustments, the mechanical components of the collection system require maintenance. Mechanical components are subject to malfunction, deterioration and mismanagement.

This operation and maintenance manual has been written as a technical guide for the operator, who should become familiar with the items contained in this manual, including the monitoring program, equipment maintenance procedures, and instructions for how and when to make operational adjustments. Additionally, the operator should remain alert to

for the isolation of different sections of the wellfield in case of malfunction. By closing the adjacent butterfly valves, the isolated malfunctioning or damaged component can be investigated and repaired without shutting down the entire system. Another function of these valves is to allow for the macro adjustment of the flow rate and vacuum applied to the corresponding sections of the well field. Isolation valve construction is shown in Detail 7 on Sheet 2 of the Drawings.

BLOWER/FLARE STATION

The blower/flare station general layout is shown in Detail 1 on Sheet 3 of the Permit Drawings. The blower/flare station is an open air, fenced compound, consisting of the following equipment:

- Two blowers and associated inlet/outlet valves
- One blower control panel

- One circuit breaker panel
- One lighting panel
- One alarm panel/telephone dialer

- One flare with a flame arrester and automatic shutoff valve
- One propane gas pilot flame fuel system
- One flare control panel

- One air compressor with enclosure and pneumatic system

The function of each category of equipment in the blower/flare station is described below.

Blowers

The blowers provide vacuum to the collection system for withdrawing LFG from the landfill. In the blower station, the two blowers are arranged in a parallel configuration; butterfly valves on the inlet and outlet piping for each blower are provided to allow any combination of the blowers to be operated. The system is designed to function normally with one blower operating, and the second blower provided as backup. Each of the centrifugal blowers is designed to provide a minimum vacuum head of 45 inches of water column (in-w.c.) at a flow rate of 582 cubic feet per minute (cfm). They are each direct-driven by a 10-hp, 3-phase, 60-hertz TEFC motor. Manufacturer's information on the procured blowers, motors, butterfly valves and check valves will be contained in the Appendices of the final O&M Manual. A sectional view of the blowers is shown in Section A of Sheet 3 of the Drawings.

Flame Arrester

The flame arrester is located between the flare and the blower to prevent flame propagation from the flare back into the rest of the system.

Flare

The flare provides for the combustion of the LFG to destroy odorous compounds in the LFG, as well as most of the trace organic compounds. The flare is designed to burn low to medium Btu gas (200-550 Btu/scf – typical of LFG) operating at a flow rate of 100 - 800 standard cubic feet per minute (scfm). A sectional view of the flare and flame arrester is shown in Section B of Sheet 3 of the Permit Drawings.

The operation of the pilot/ignition system is automatically controlled through a combination of thermocouples (and/or an UV scanner), timer, and solenoid valves. The exact operating sequence will be described in the final O&M Manual based on the manufacturer's information, also to be included in the final O&M Manual Appendices. In general:

- Remote spark ignition of propane gas/air mixture creates pilot flame.
- Upon successful ignition of pilot, contacts activate a single blower, and pneumatic shutoff valve is opened.
- When main flame is successfully ignited (as detected by an UV scanner), propane pilot gas is automatically shut off.
- If pilot is not ignited within the preselected time interval (as set on the timer), pilot is shut off and "Pilot Ignition Failure" is signalled with trouble light.
- If main flame is not ignited within the preselected time interval, pilot is shut off and "Flare Ignition Failure" is signalled with trouble light.
- If the main flame is extinguished during operations, the automatic shutoff valve is closed, the blower(s) shut down, and the telephone dialer is activated to notify the locations stored in memory.

Flare Controller Panel

The flare controls are housed in a separate panel near the blower control panels. These controls include a flame safeguard system, digital temperature readout, flame status indicators, timers, solenoid valves, switches, and relays with contacts to automatically control flare ignition, blower startup, and shutoff valve activation.

GENERAL SAFETY PRECAUTIONS

LFG containing methane can collect in condensate knockouts, valve boxes, and electric panel boxes on or near buried refuse. The collection system piping, both above and below ground, will also probably be filled with LFG whether or not the blowers are operating.

Since methane in LFG is combustible, the guiding criteria when working in areas where the presence of LFG is suspected is to exercise caution, use detection instrumentation, and avoid producing a spark in these areas. Therefore, smoking should not be permitted while working on or within 25 feet of the LFG odor control system. Personnel should use flashlights or mirrors, never matches or lighters, to assist in visual inspection. When conducting repairs, the operator should isolate the repair area from LFG by closing appropriate valves, plugging the pipes, and/or shutting down portions of the system. Workers also should remain alert to other nearby maintenance and construction activities that could damage the odor control system or cause personal injury.

SYSTEM OPERATIONS OBJECTIVES

Performance Criteria

The performance criteria and system operating objectives for the completed LFG odor control system are as follows:

- Control odor.
- Limit extraction rates in order to decrease the potential for atmospheric infiltration into the landfill and subsequent fire hazard.
- Limit extraction rates in order to reduce the concentration of oxygen at the flare and maintain methane concentrations sufficient for combustion.
- Comply with the conditions established by DNREC regarding system combustion efficiency and emissions.

Permit Conditions

Permit conditions will be established by the Delaware Department of Natural Resources and Environmental Control (DNREC) Air Quality Management Section upon issuance of the Permit to Operate. These conditions will be incorporated into the final Operations Manual.

OPERATING SEQUENCE DESCRIPTION

(This Section to be included in final Operations Manual)

2. At the operating blower, check and record inlet vacuum and outlet pressure.

3. Record the flare temperature, and operating status of the flare control panel.

4. Check and record that the flare is operating.

5. At the flare station monitoring port, measure and record the methane, oxygen, and hydrogen sulfide concentrations of the LFG, and the inlet pressure to the flare.

MONITORING SCHEDULES

The monitoring schedules for the various components of the LFG odor control system are divided into two categories: routine and accelerated. A summary of the monitoring schedules is provided in the table below. Monitoring during initial start-up of the system will be included in the construction acceptance tests and is separate from the monitoring specified herein. Routine monitoring is implemented subsequent to this initial start-up. Accelerated (increased frequency) monitoring is initiated in response to a change in condition (e.g., increased odor problems) at the site. In the event of a system shut-down of 3 days or more, the subsequent start-up must be accompanied by an additional round of system monitoring.

Monitoring of the odor control system and its effectiveness shall be done as follows:

Extraction System

- Routine monitoring shall be conducted monthly for the first year of system operation. Depending on the monitoring results of the first year (i.e., consistency of flows and methane content from the extraction system), the monitoring frequency may be reduced (e.g., bi-monthly).

- An accelerated monitoring schedule shall be implemented if significant odors are noted or if conditions require significant change in the extraction system (e.g., major repairs or system rebalancing). Follow trouble-shooting or system balancing procedures and monitor the extraction system weekly for 1 month before resuming the monthly monitoring schedule.

Blower/Flare Station

- Routine monitoring shall be conducted weekly for the duration of the system's operational life.

- An accelerated monitoring schedule shall be implemented if conditions require a significant adjustment in the blower/flare station (e.g., operation of both blowers in parallel or system rebalancing). Follow trouble-shooting or system balancing procedures and monitor the blower/flare station daily until steady-

Each Monitoring Period

Inspect the entire system including blowers, flame arrester, flare, condensate sumps, and wellfield for vandalism, mechanical malfunctions, and leaks. Some leaks can be heard, particularly if they occur at a condensate trap or where piping is on or near the ground surface.

TROUBLESHOOTING

Troubleshooting may involve adjusting an extraction well flow rate, unclogging a blocked pipe, repairing broken equipment, or re-igniting the flare. Some of the problems that arise may be noticed by the operator, and they will simply make adjustments in the field and note them on the data form. Other problems may be indicated by long-term trands noticed by the reviewer in the office, who will in turn instruct the operator to make adjustments.

It is important for the operator to keep good records. Along with the "standard" data to be collected (for which spaces are provided on the monitoring forms), the "Comments" section on the forms is important and should be utilized routinely. Any observations of changed conditions should be reported. These changes may be indicative of a developing (or existing) problem that will require repair.

This section describes troubleshooting procedures for common problems which can be anticipated at this time. Due to the varying nature of a landfill, other problems may occur which are not addressed herein. Once the operator and office reviewer have gained experience with this system, they should be able to identify such problems and develop other troubleshooting procedures appropriate for alleviating problems as they arise.

Flare - Loss of Ignition

The purpose of the flare is to control odors in the gases withdrawn from the LFG collection system. If the flare does not support a flame, it may indicate the possible entry of air into the system (and, hence, possibly into the landfill), flare temperature fluctuations, or mechanical and/or electrical failure. To correct an air intrusion into the landfill, the withdrawal rate at extraction wells could be reduced, system valves adjusted, a schedule of periodic blower operation instituted, or some combination of the above performed to reduce air intrusion and allow the flare to remain lit during system operation. If mechanical and/or electrical problems are affecting the flare operation, repairs will be required.

A flare failure due to flame outage will be indicated by the "FLARE SHUTDOWN" light on the flare control panel. Restart the blower/flare station as outlined in previous sections and adjust the inlet valve of the operating blower accordingly. Candle flare flame failure is typically caused by excessive exit gas velocities at the flare tip or low Btu content of the extracted LFG. In either case, the extraction rate from the wellfield will need to be reduced. This typically will involve slightly closing the inlet butterfly valve on the operating blower, thereby cutting back the flow of gas to the flare.

- Surging vacuum (the pressure gauge fluctuates when attached to the extraction well monitoring port) and flow at an extraction well — an indication that liquid is trapped in the lateral.

- Decreased methane content at an extraction well — an indication that the well has been "pulling" too hard (i.e., the vacuum and flow rate at the well are too high).

At the DRPI landfill, overpulling may be a greater concern than condensate blockage due to the relatively dry porous nature of the waste.

After conducting a round of extraction well monitoring, the data collection personnel will review the full set of monitoring results before making any valve adjustments at the extraction wells. Insignificant changes in extraction well vacuums and flow rates (a change of less than 20 percent from the previous round of monitoring) may be ignored, unless some other problem is noted.

Significantly reduced vacuums and flow rates (changes of greater than 20 percent from the previous round of monitoring) at the extraction wells suggest that the extraction well valves may require adjustment. Two cases of significant vacuum/flow rate reduction occur for which the data collection personnel should check: (1) "isolated" (i.e., at non-adjacent extraction wells) occurrences; or (2) "serial" (i.e., several wells in series) occurrences.

Significantly Reduced Vacuum/Flow Rate: Isolated Occurrence

A significant vacuum/flow rate change observed at the extraction wells as an "isolated" occurrence is an indication that the lateral between the extraction well and the main header pipe may be clogged. In this case, the following adjustment/repair procedures should be performed:

1. Fully close the extraction well valve.

2. As quickly as possible, fully open and then re-close the extraction well valve. (This will create a flow surge which may unplug the lateral.)

3. Open the extraction well valve to its original position; obtain a vacuum/flow reading at the monitoring port.

4. If the vacuum/flow reading does not return to normal, repeat Steps 1 to 3 a few more times. If the problem is not fixed after several tries, go to step 5.

5. Measure the vacuum on both sides of the well head valve with the valve open. If a significant pressure drop is noted, the valve is malfunctioning. Remove the valve and inspect/repair as necessary.

check for leaks around the aboveground pipe fittings (gate valve connections, monitoring port fittings, well head tee). If no leaks are detected, reduce the flow at the well to one half the initial measured flow. If leaks are detected, reduce the well flow and repair in a timely manner.

Landfill Fire

Oxygen drawn into the refuse can cause a landfill fire. Odor control systems are susceptible to overwithdrawal and a subsequent landfill fire because the operational objective is to maximize gas extraction. The system operator should look for excessive carbon monoxide concentrations, high temperatures, soft or melted piping, and other factors indicative of a subsurface fire. Carbon monoxide monitoring (using Draeger tubes for example) can be used to isolate the fire in the vicinity of an extraction well(s). Carbon monoxide readings greater than 50 ppm suggest that a fire is present.

In the event of a landfill fire, the operator should notify DNREC and take the steps necessary to reduce the amount of oxygen available inside the landfill, including shutting down all or a portion of the LFG extraction system. If smoke or flames are visible at the landfill surface, soil should be spread to smother it.

Odors

If moderate to severe odors are noticeable in the area near one of the extraction wells but no apparent avenue for LFG to escape is found, such as a crack or erosion gully on a side slope, adjustments should be made at the extraction wells. The operator should attempt to increase the withdrawal rates by 50 percent at the extraction wells closest to the area of detected odors.

Potential Problem Areas

Water ponding on the surface in the vicinity of the collection system may increase the likelihood of damage to the collection system by allowing moisture to percolate into a small area of the landfill, thereby increasing differential settlement and subjecting the collection system piping to unequal stresses. Therefore, locations of ponding water should be regraded to eliminate the depressions. Additionally, stress cracks and/or erosion gullies on the side slopes of the landfill in the vicinity of the collection system should be filled with soil. With any regrading or filling, seeding should be undertaken in order to maintain a healthy grass cover on the landfill.

The operator of the LFG control system also should make sure that each of the components of the collection system are accessible. These procedures will involve cutting grass, cleaning bird residue from the aboveground extraction well head assemblies, and cleaning within and around the blower/flare station and condensate handling stations.