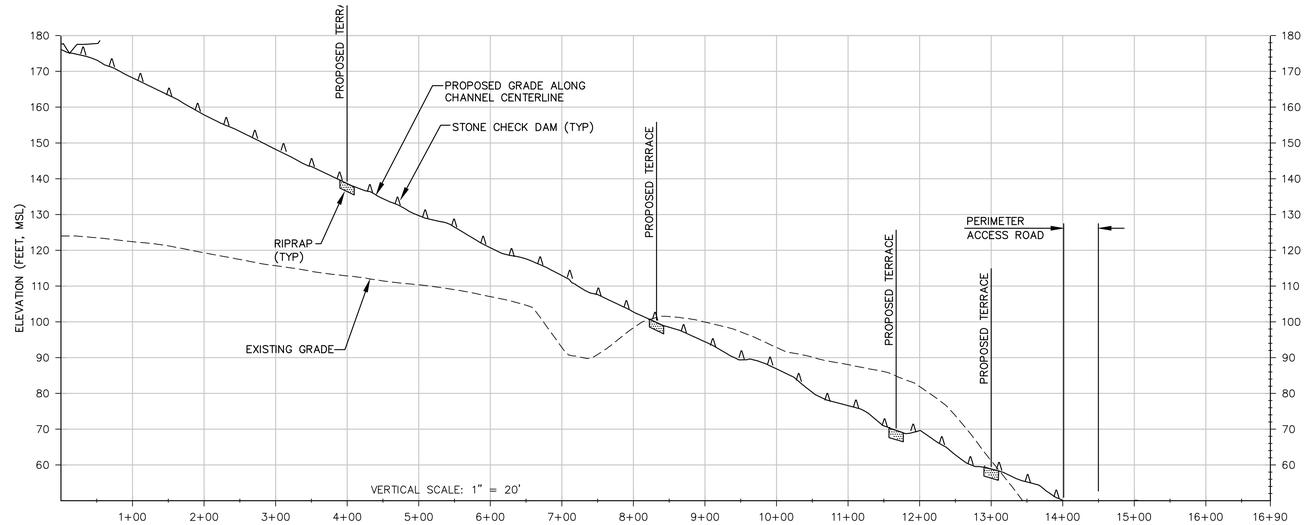

A — PROFILE 3
HORIZONTAL SCALE: 1" = 100'

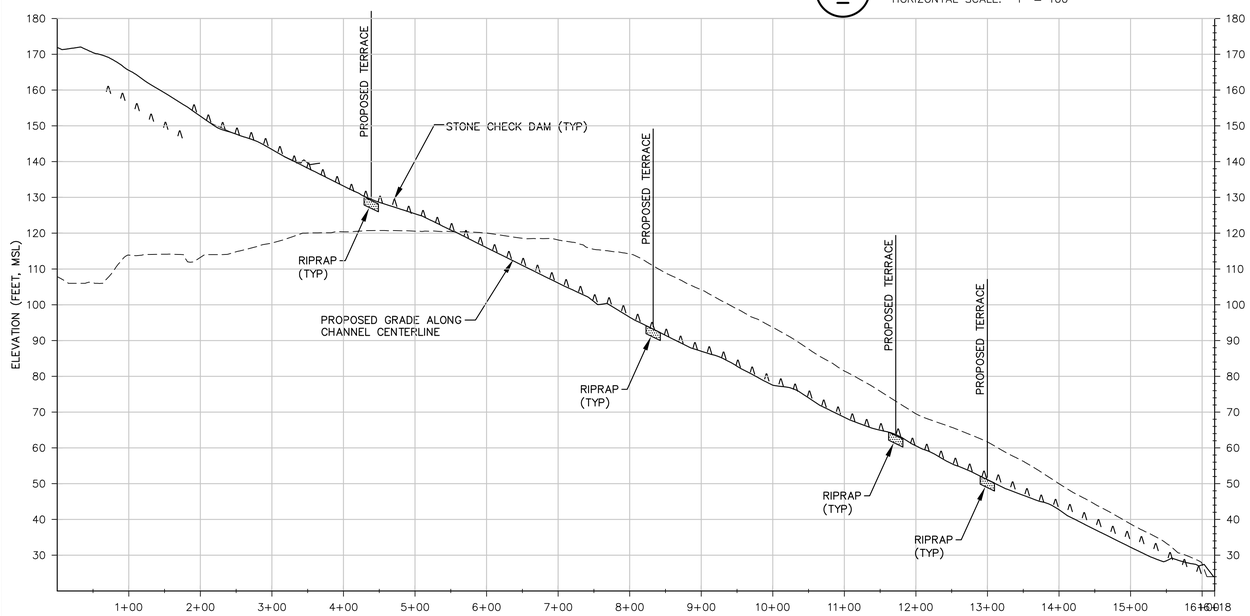

B — PROFILE 4
HORIZONTAL SCALE: 1" = 100'
VERTICAL SCALE: 1" = 20'

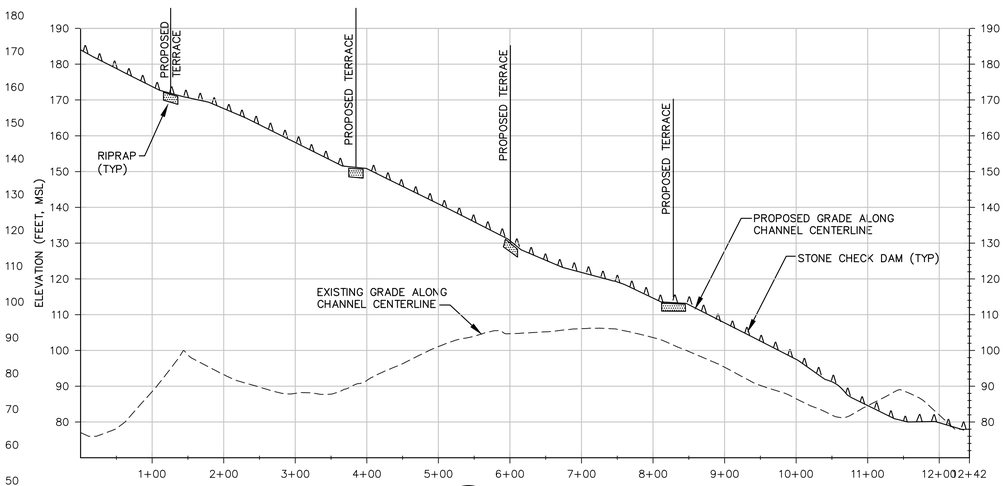

1 C — PROFILE 5
HORIZONTAL SCALE: 1" = 100'
VERTICAL SCALE: 1" = 20'

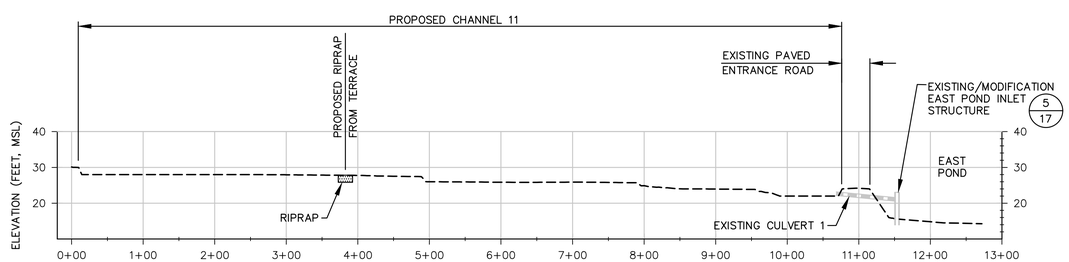

D — PROFILE 6
HORIZONTAL SCALE: 1" = 100'
VERTICAL SCALE: 1" = 20'

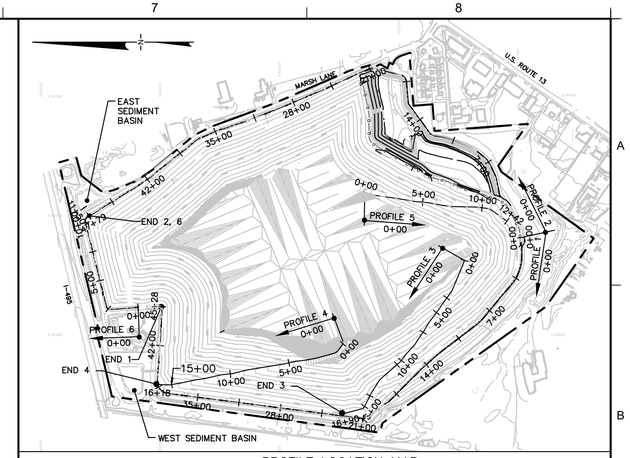

PROFILE LOCATION MAP
SCALE: 1" = 600'

100 50 0 100 200
HORIZONTAL SCALE: 1" = 100'

20 10 0 20 40
VERTICAL SCALE: 1" = 100'

NOTES:

1. SEE DRAWING 2 FOR GENERAL NOTES.
2. STONE CHECK DAMS WILL BE REMOVED FOLLOWING FINAL STABILIZATION AND SHALL ONLY BE REMOVED WITH APPROVAL FROM DNREC SEDIMENT AND STORMWATER PROGRAM.

PERMIT DRAWING

REV	DATE	DESCRIPTION	DRN	APP
1	MAR 2019	REVISED FINAL GRADING PLAN	TSJ	CHP

Geosyntec consultants
10221 WINCOPIN CIRCLE, 4TH FLOOR
COLUMBIA, MARYLAND 21044 USA
PHONE: 410.381.4333

WASTE MANAGEMENT
DELAWARE RECYCLABLE PRODUCTS, INC.
246 MARSH LANE
NEW CASTLE, DELAWARE 19720
PHONE: 302.655.1360

TITLE: CHANNEL PROFILES I

PROJECT: VERTICAL EXPANSION DESIGN MODIFICATION APPLICATION

SITE: DRPI INDUSTRIAL WASTE LANDFILL NEW CASTLE, DELAWARE

THIS DRAWING MAY NOT BE ISSUED FOR PROJECT TENDER OR CONSTRUCTION, UNLESS SEALED.

SIGNATURE

7/19/2018
DATE

CARRIE HALE PENDLETON REGISTERED No. 14185 DELAWARE PROFESSIONAL ENGINEER

DESIGN BY:	KSS	DATE:	JULY 2018
DRAWN BY:	MF/TJ/BF	PROJECT NO.:	ME1571
CHECKED BY:	KSS	FILE:	1571-019-020
REVIEWED BY:	CHP	DRAWING NO.:	19 OF 28
APPROVED BY:	CHP		

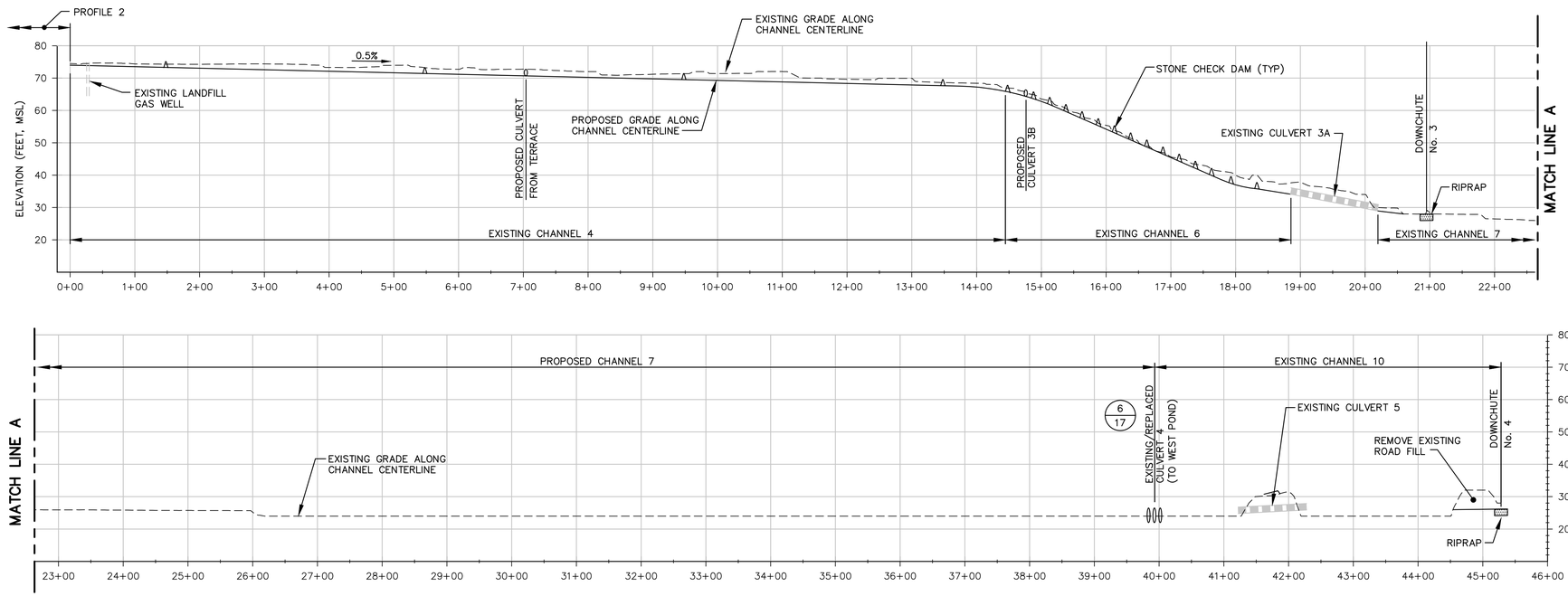

A
—
PROFILE 1
HORIZONTAL SCALE: 1" = 100'
VERTICAL SCALE: 1" = 20'

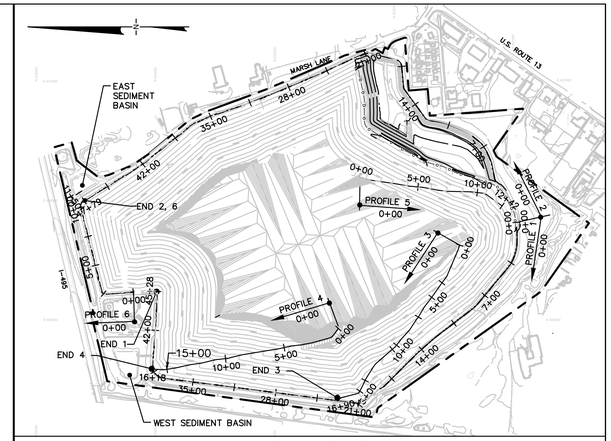

PROFILE LOCATION MAP
SCALE: 1" = 600'

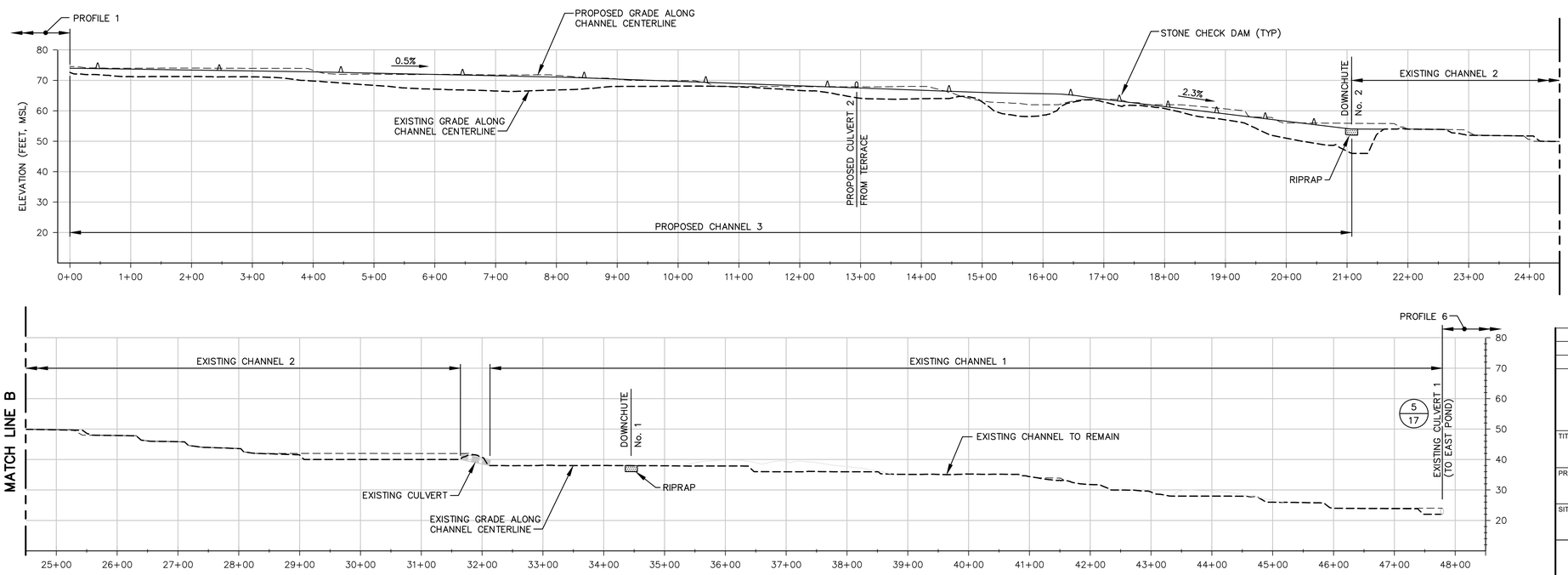

B
—
PROFILE 2
HORIZONTAL SCALE: 1" = 100'
VERTICAL SCALE: 1" = 20'

NOTES:

1. SEE DRAWING 2 FOR GENERAL NOTES.
2. STONE CHECK DAMS WILL BE REMOVED FOLLOWING FINAL STABILIZATION AND SHALL ONLY BE REMOVED WITH APPROVAL FROM DNREC SEDIMENT AND STORMWATER PROGRAM.

100 50 0 100 200
HORIZONTAL SCALE: 1" = 100'

20 10 0 20 40
VERTICAL SCALE: 1" = 100'

REV	DATE	DESCRIPTION	DRN	APP
1	MAR 2019	REVISED FINAL GRADING PLAN	TSJ	CHP

Geosyntec consultants
10221 WINCOPIN CIRCLE, 4TH FLOOR
COLUMBIA, MARYLAND 21044 USA
PHONE: 410.381.4333

WASTE MANAGEMENT
DELAWARE RECYCLABLE PRODUCTS, INC.
246 MARSH LANE
NEW CASTLE, DELAWARE 19720
PHONE: 302.655.1360

TITLE: CHANNEL PROFILES II

PROJECT: VERTICAL EXPANSION DESIGN MODIFICATION APPLICATION

SITE: DRPI INDUSTRIAL WASTE LANDFILL NEW CASTLE, DELAWARE

THIS DRAWING MAY NOT BE ISSUED FOR PROJECT TENDER OR CONSTRUCTION, UNLESS SEALED.

SIGNATURE

7/19/2018
DATE

CARRIE HALE PENDLETON REGISTERED No. 14185 DELAWARE PROFESSIONAL ENGINEER

DESIGN BY:	KSS	DATE:	JULY 2018
DRAWN BY:	MF/TJ/BF	PROJECT NO.:	ME1571
CHECKED BY:	KSS	FILE:	1571-019-020
REVIEWED BY:	CHP	DRAWING NO.:	20 OF 28
APPROVED BY:	CHP		

PERMIT DRAWING

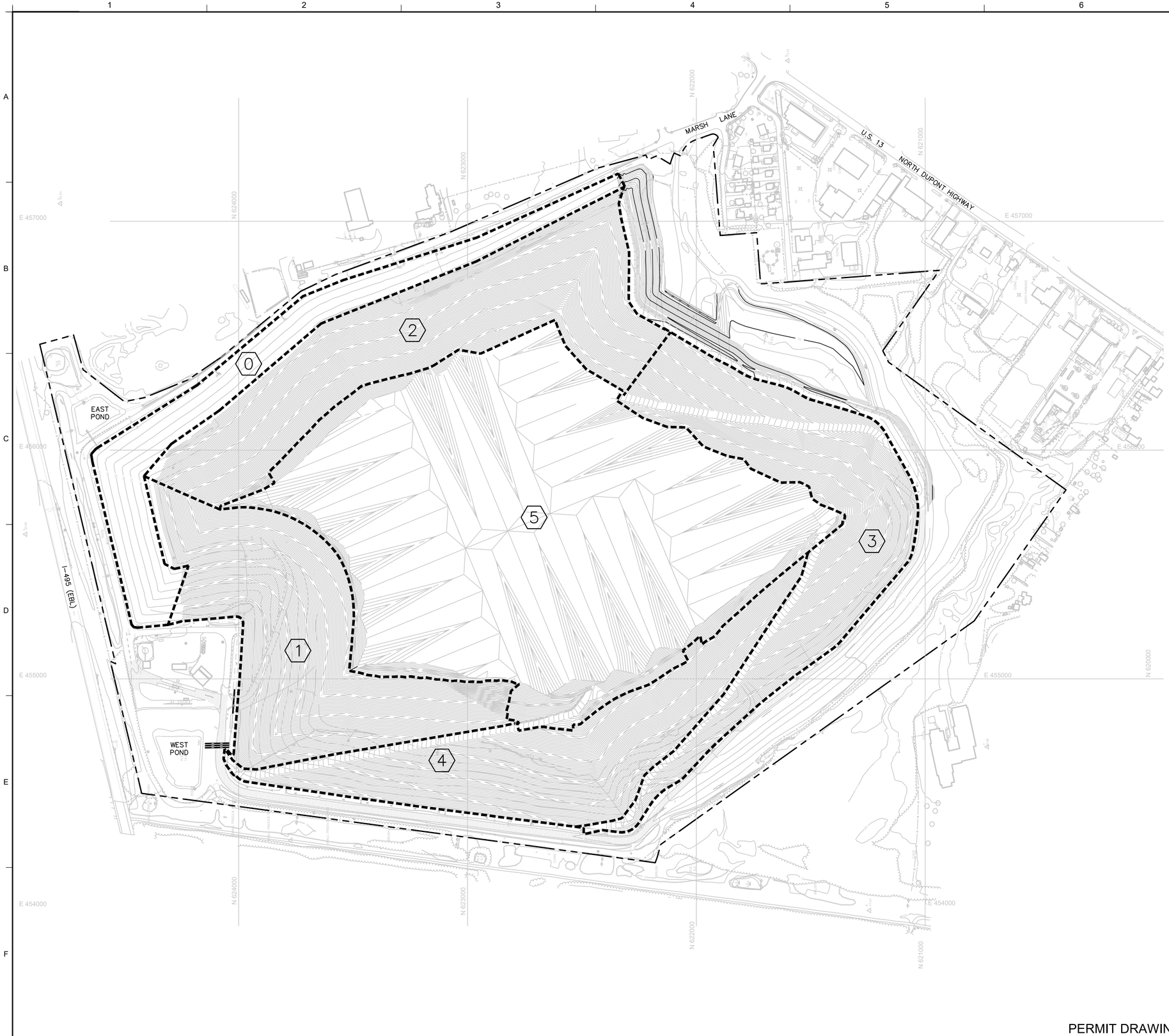

NORTH

LEGEND

- PROPERTY BOUNDARY
- 60 EXISTING GRADE CONTOUR (FEET–MSL)
- 100 FINAL COVER GRADE CONTOUR (FEET–MSL)

NOTES:

1. SEE DRAWING 2 FOR GENERAL NOTES.
2. ACTUAL SIZE AND SEQUENCE OF FILLING AREAS MAY VARY DUE TO OPERATIONAL NEEDS AND CONSTRUCTION TIMEFRAME.

200 100 0 200 400

SCALE: 1" = 200'

REV	DATE	DESCRIPTION	DRN	APP
1	MAR 2019	REVISED FINAL GRADING PLAN	TSJ	CHP

Geosyntec consultants
10221 WINCOPIN CIRCLE, 4TH FLOOR
COLUMBIA, MARYLAND 21044 USA
PHONE: 410.381.4333

WASTE MANAGEMENT
DELAWARE RECYCLABLE PRODUCTS, INC.
246 MARSH LANE
NEW CASTLE, DELAWARE 19720
PHONE: 302.655.1360

TITLE: WASTE FILLING SEQUENCE

PROJECT: VERTICAL EXPANSION DESIGN MODIFICATION APPLICATION

SITE: DRPI INDUSTRIAL WASTE LANDFILL NEW CASTLE, DELAWARE

THIS DRAWING MAY NOT BE ISSUED FOR PROJECT TENDER OR CONSTRUCTION, UNLESS SEALED.

SIGNATURE

7/19/2018
DATE

CARRIE HALE PENDLETON REGISTERED No. 14185 DELAWARE PROFESSIONAL ENGINEER

DESIGN BY:	KSS	DATE:	JULY 2018
DRAWN BY:	MF/TJ/BF	PROJECT NO.:	ME1571
CHECKED BY:	KSS	FILE:	1571-021
REVIEWED BY:	CHP	DRAWING NO.:	
APPROVED BY:	CHP		21 OF 28

PERMIT DRAWING

A

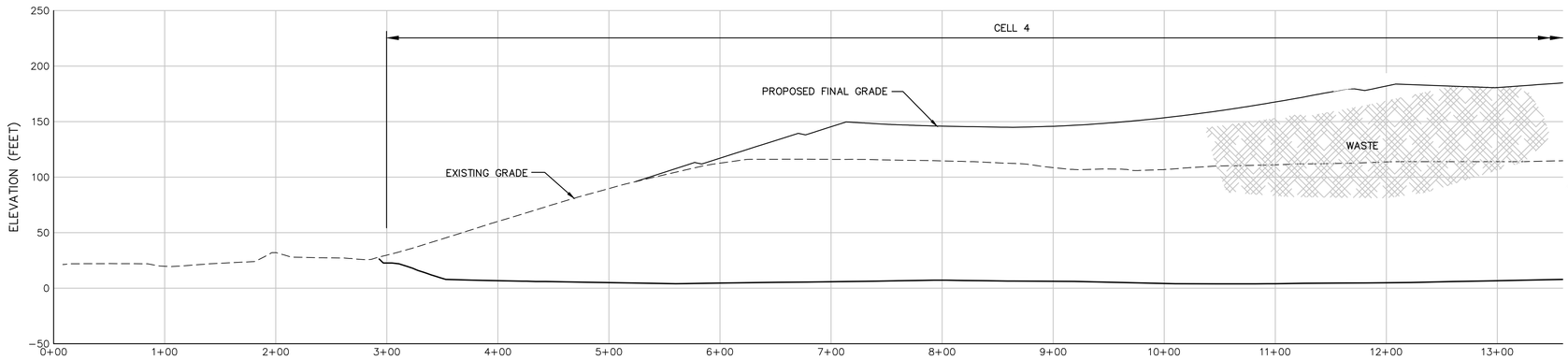

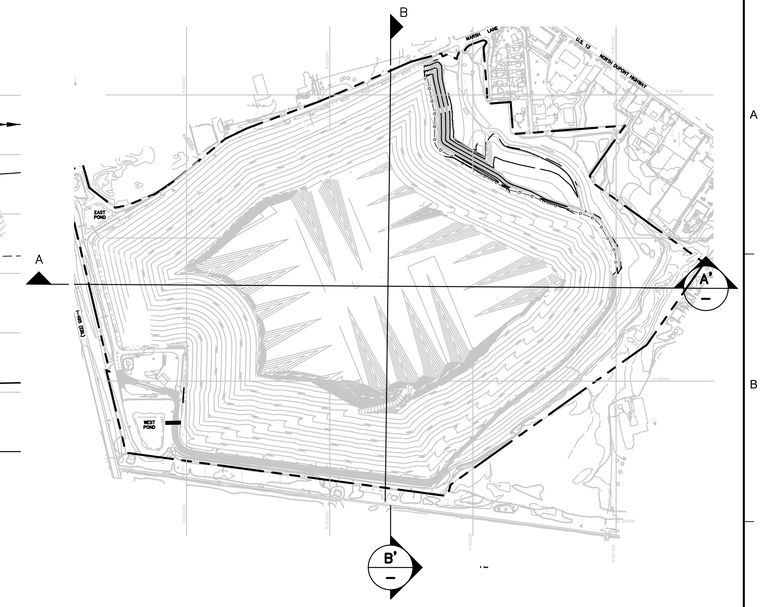

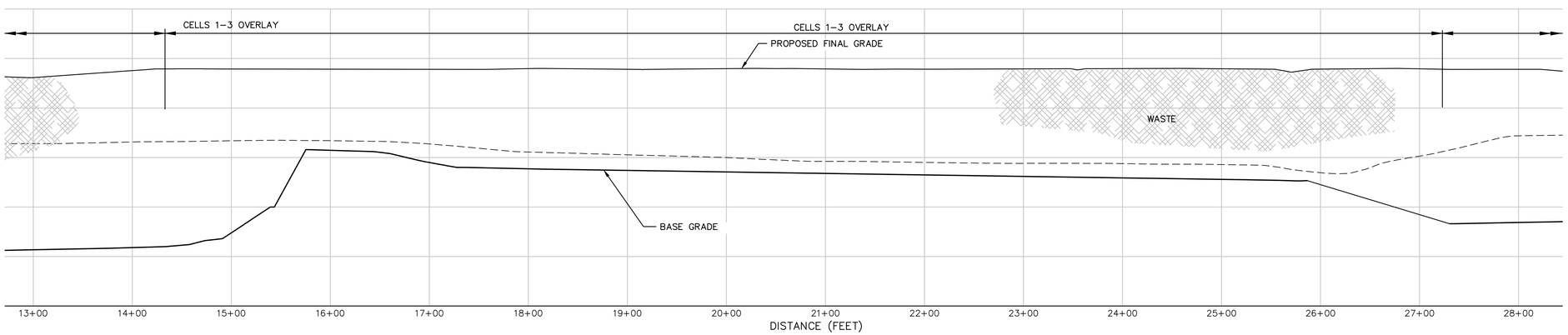

A'

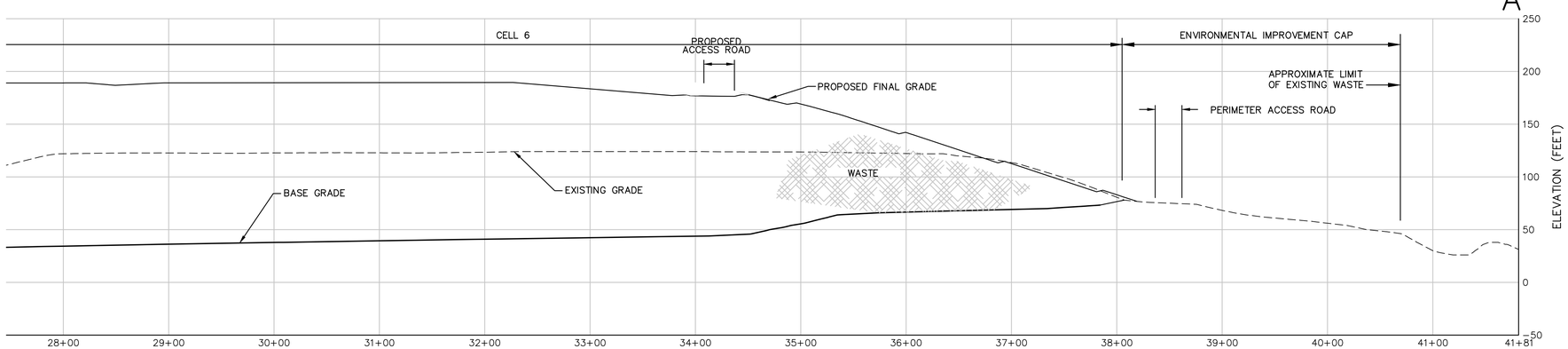

NOTES:

1. SEE DRAWING 2 FOR GENERAL NOTES.

200 100 0 200 400
SCALE: 1" = 200'

REV	DATE	DESCRIPTION	DRN	APP
1	MAR 2019	REVISED FINAL GRADING PLAN	TSJ	CHP

Geosyntec consultants
10221 WINCOPIN CIRCLE, 4TH FLOOR
COLUMBIA, MARYLAND 21044 USA
PHONE: 410.381.4333

WASTE MANAGEMENT
DELAWARE RECYCLABLE PRODUCTS, INC.
246 MARSH LANE
NEW CASTLE, DELAWARE 19720
PHONE: 302.655.1360

TITLE: LANDFILL CROSS SECTIONS I

PROJECT: VERTICAL EXPANSION
DESIGN MODIFICATION APPLICATION

SITE: DRPI INDUSTRIAL WASTE LANDFILL
NEW CASTLE, DELAWARE

THIS DRAWING MAY NOT BE ISSUED FOR PROJECT TENDER OR CONSTRUCTION, UNLESS SEALED.

C.H. Pendleton
SIGNATURE

7/19/2018
DATE

CARRIE HALE PENDLETON
REGISTERED
No. 14185
DELAWARE
PROFESSIONAL ENGINEER

DESIGN BY:	KSS	DATE:	JULY 2018
DRAWN BY:	MF/TJ/BF	PROJECT NO.:	ME1571
CHECKED BY:	KSS	FILE:	1571-022-023
REVIEWED BY:	CHP	DRAWING NO.:	
APPROVED BY:	CHP	22 OF 28	

PERMIT DRAWING

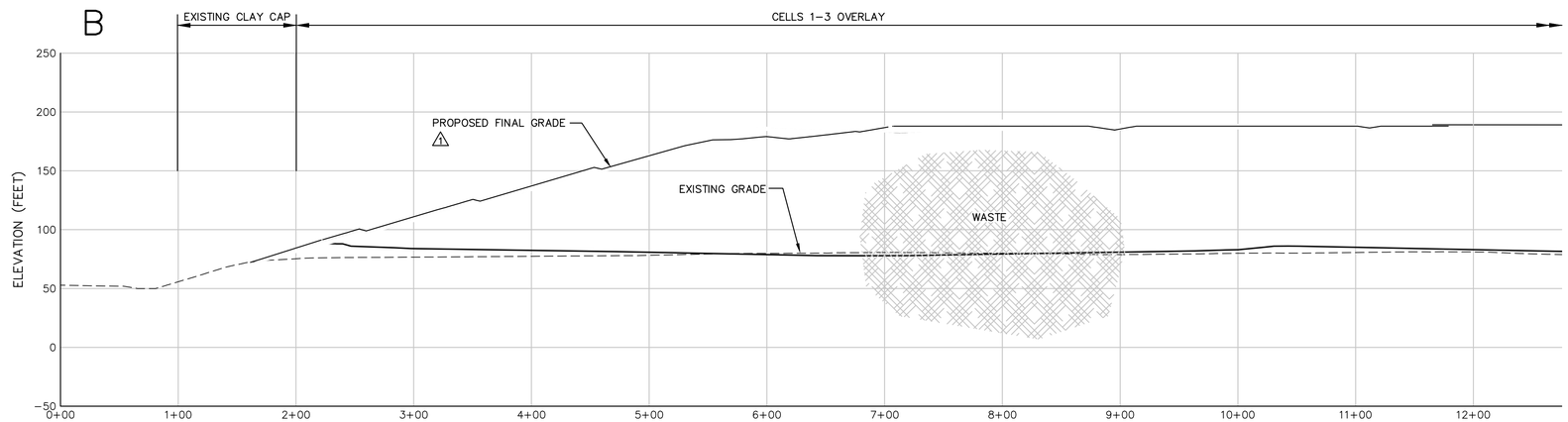

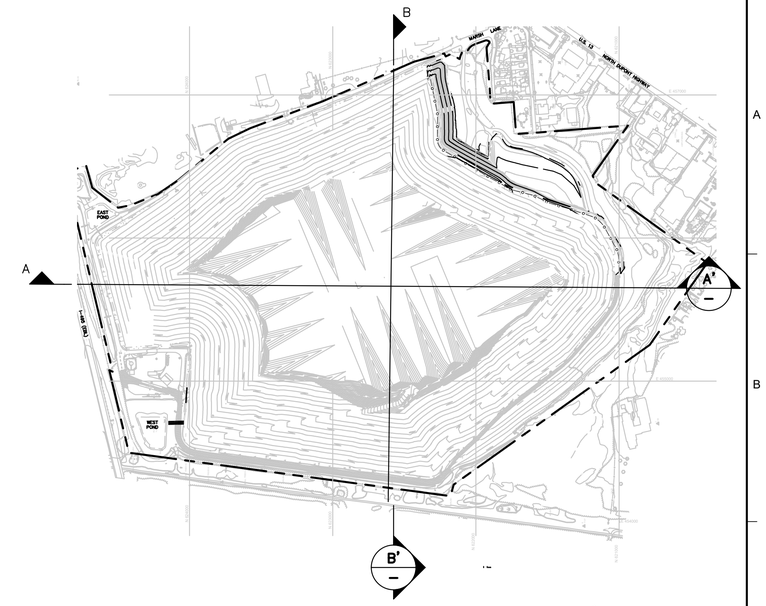

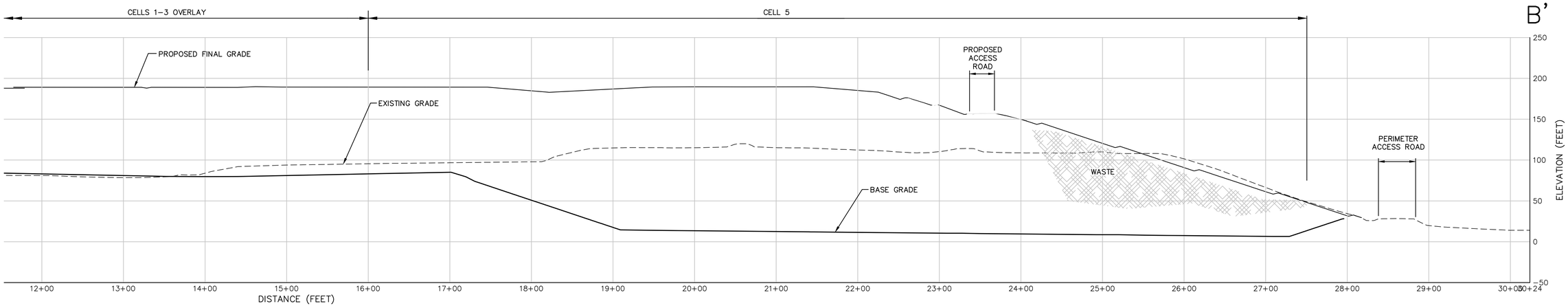

NOTES:

1. SEE DRAWING 2 FOR GENERAL NOTES.

200 100 0 200 400
SCALE: 1" = 200'

REV	DATE	DESCRIPTION	DRN	APP
1	MAR 2019	REVISED FINAL GRADING PLAN	TSJ	CHP

Geosyntec consultants
10221 WINCOPIN CIRCLE, 4TH FLOOR
COLUMBIA, MARYLAND 21044 USA
PHONE: 410.381.4333

WASTE MANAGEMENT
DELAWARE RECYCLABLE PRODUCTS, INC.
246 MARSH LANE
NEW CASTLE, DELAWARE 19720
PHONE: 302.655.1360

TITLE: LANDFILL CROSS SECTIONS II

PROJECT: VERTICAL EXPANSION
DESIGN MODIFICATION APPLICATION

SITE: DRPI INDUSTRIAL WASTE LANDFILL
NEW CASTLE, DELAWARE

THIS DRAWING MAY NOT BE ISSUED FOR PROJECT TENDER OR CONSTRUCTION, UNLESS SEALED.

C.H. Pendleton
SIGNATURE

7/19/2018
DATE

CARRIE HALE PENDLETON
REGISTERED
No. 14185
DELAWARE
PROFESSIONAL ENGINEER

DESIGN BY:	KSS	DATE:	JULY 2018
DRAWN BY:	MF/TJ/BF	PROJECT NO.:	ME1571
CHECKED BY:	KSS	FILE:	1571-022-023
REVIEWED BY:	CHP	DRAWING NO.:	23 OF 28
APPROVED BY:	CHP		

PERMIT DRAWING

NORTH

LEGEND

- PROPERTY BOUNDARY
- EXISTING GRADE CONTOUR (FEET–MSL)
- LINER GRADE CONTOUR (FEET–MSL)
- FUTURE FINAL GRADE CONTOUR (FEET–MSL)
- EXISTING TREELINE
- EXISTING ROAD
- EXISTING BUILDING
- EW–1 SET 11/94 — EXTRACTION WELL, SET DATE EXTRACTION
- EW–27 SET 11/96 — WELL, SET NOVEMBER, 1996
- EW–31 SET 11/97 — EXTRACTION WELL, SET NOVEMBER, 1997
- EXISTING VALVE
- EXISTING REDUCER
- EXISTING GAS PROBE TIE–IN
- CPS 6-2 — CONDENSATE PUMP STATION OR DRIP LEG
- VERTICAL LANDFILL GAS CONDUIT
- HEADER FIELD LOCATION MARCH, 1999, JANUARY, 2010 AND OCTOBER, 2011
- HEADER BASED ON PLANS BY OTHERS

200 100 0 200 400
SCALE: 1" = 200'

NOTES:

1. SEE DRAWING 2 FOR GENERAL NOTES.
2. EXISTING GAS SYSTEM AS–BUILT INFORMATION PROVIDED IN CADD FILE NO 33826–L, REVISION 21 BY VANDEMARK & LYNCH, INC., DATED JANUARY 13, 2016.
3. LIMIT OF COVER OVER EXISTING WASTE IN CELL 6 AREA MAY BE EXTENDED AT LOCATIONS WHERE THE DISTANCE BETWEEN THE VERTICAL LANDFILL GAS WELL AND THE LIMIT OF COVER IS LESS THAN 30 FEET.
4. BASE TOPOGRAPHY SHOWN ON THIS DRAWING WAS COMPILED BY PHOTOGRAMMETRIC METHODS FROM AERIAL PHOTOGRAPH DATED MAY 9, 2018, BY AIR SURVEY CORP.

PERMIT DRAWING

REV	DATE	DESCRIPTION	DRN	APP

Geosyntec consultants
10221 WINCOPIN CIRCLE, 4TH FLOOR
COLUMBIA, MARYLAND 21044 USA
PHONE: 410.381.4333

WASTE MANAGEMENT
DELAWARE RECYCLABLE PRODUCTS, INC.
246 MARSH LANE
NEW CASTLE, DELAWARE 19720
PHONE: 302.655.1360

TITLE: LANDFILL GAS MANAGEMENT SYSTEM - EXISTING SYSTEM

PROJECT: VERTICAL EXPANSION DESIGN MODIFICATION APPLICATION

SITE: DRPI INDUSTRIAL WASTE LANDFILL NEW CASTLE, DELAWARE

THIS DRAWING MAY NOT BE ISSUED FOR PROJECT TENDER OR CONSTRUCTION, UNLESS SEALED.

SIGNATURE

7/19/2018
DATE

CARRIE HALE PENDLETON REGISTERED No. 14185 DELAWARE PROFESSIONAL ENGINEER

DESIGN BY:	KSS	DATE:	JULY 2018
DRAWN BY:	MF/TJ/BF	PROJECT NO.:	ME1571
CHECKED BY:	KSS	FILE:	1571-024
REVIEWED BY:	CHP	DRAWING NO.:	
APPROVED BY:	CHP		24 OF 28

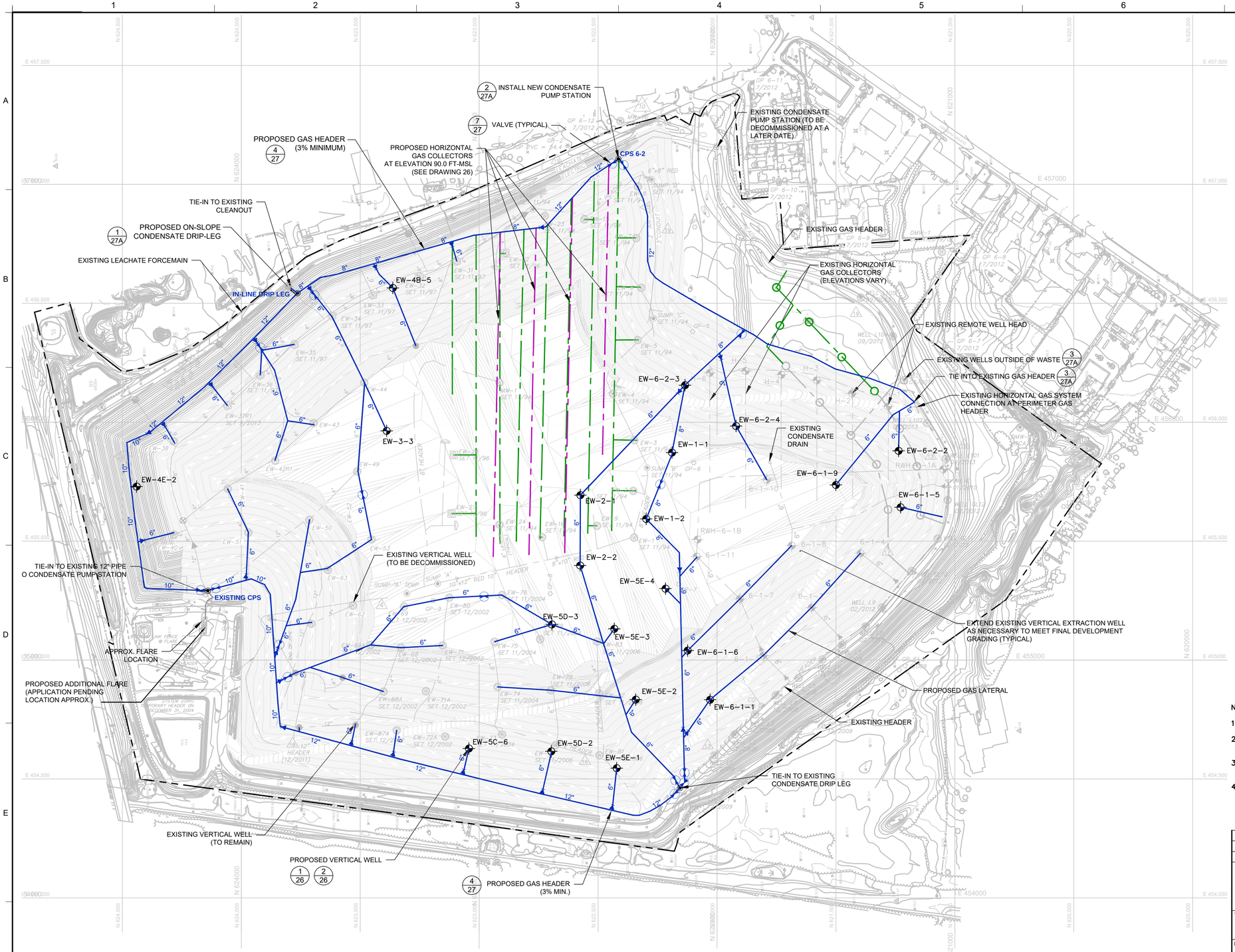

NORTH

LEGEND

- PROPERTY BOUNDARY
- EXISTING GRADE CONTOUR (FEET–MSL)
- LINER GRADE CONTOUR (FEET–MSL)
- FUTURE FINAL GRADE CONTOUR (FEET–MSL)
- EXISTING TREELINE
- EXISTING ROAD
- EXISTING BUILDING
- EXISTING GAS PROBE
- EXISTING EXTRACTION WELL
- EXISTING SUMP
- EXISTING VALVE
- EXISTING REDUCER
- EXISTING GAS PROBE TIE–IN
- EW–28 EXISTING GAS WELL TO REMAIN
- EW–83 EXISTING GAS WELL TO BE DECOMMISSIONED
- COVER TERRACE
- STORMWATER DIVERSION BERM
- EXISTING GAS HEADER
- PROPOSED GAS HEADER (ABOVE CAP)
- PROPOSED HORIZONTAL GAS COLLECTOR (IN WASTE) 4/26
- PROPOSED PERFORATED PIPING (BELOW SLOPE CAP OVER LINER SYSTEM)
- VALVE
- REDUCER
- CPS 6-2 CONDENSATE PUMP STATION OR DRIP LEG
- VERTICAL LANDFILL GAS CONDUIT

NOTES:

1. SEE DRAWING 2 FOR GENERAL NOTES.
2. BASE TOPOGRAPHY SHOWN ON THIS DRAWING WAS COMPILED BY PHOTOGRAMMETRIC METHODS FROM AERIAL PHOTOGRAPH DATED JANUARY 17, 2014, BY AIR SURVEY CORP.
3. EXISTING GAS SYSTEM AS–BUILT INFORMATION PROVIDED IN CADD FILE NO 33826–L, REVISION 19 BY VANDENMARK & LYNCH, INC., DATED SEPTEMBER 18, 2013.
4. LANDFILL GAS SYSTEM LAYOUT TAKEN FROM GOLDER ASSOCIATES FILE 14000742B024–REV 2 REVISED MARCH 18, 2015

REV	DATE	DESCRIPTION	DRN	APP

Geosyntec consultants
10221 WINCOPIN CIRCLE, 4TH FLOOR
COLUMBIA, MARYLAND 21044 USA
PHONE: 410.381.4333

WASTE MANAGEMENT
DELAWARE RECYCLABLE PRODUCTS, INC.
246 MARSH LANE
NEW CASTLE, DELAWARE 19720
PHONE: 302.655.1360

TITLE: LANDFILL GAS MANAGEMENT SYSTEM - FINAL CONDITION

PROJECT: VERTICAL EXPANSION DESIGN MODIFICATION APPLICATION

SITE: DRPI INDUSTRIAL WASTE LANDFILL NEW CASTLE, DELAWARE

THIS DRAWING MAY NOT BE ISSUED FOR PROJECT TENDER OR CONSTRUCTION, UNLESS SEALED.

SIGNATURE

7/19/2018
DATE

CARRIE HALE PENDLETON REGISTERED No. 14185 DELAWARE PROFESSIONAL ENGINEER

DESIGN BY:	KSS	DATE:	JULY 2018
DRAWN BY:	MF/TJ/BF	PROJECT NO.:	ME1571
CHECKED BY:	KSS	FILE:	1571-025
REVIEWED BY:	CHP	DRAWING NO.:	25 OF 28
APPROVED BY:	CHP		

PERMIT DRAWING

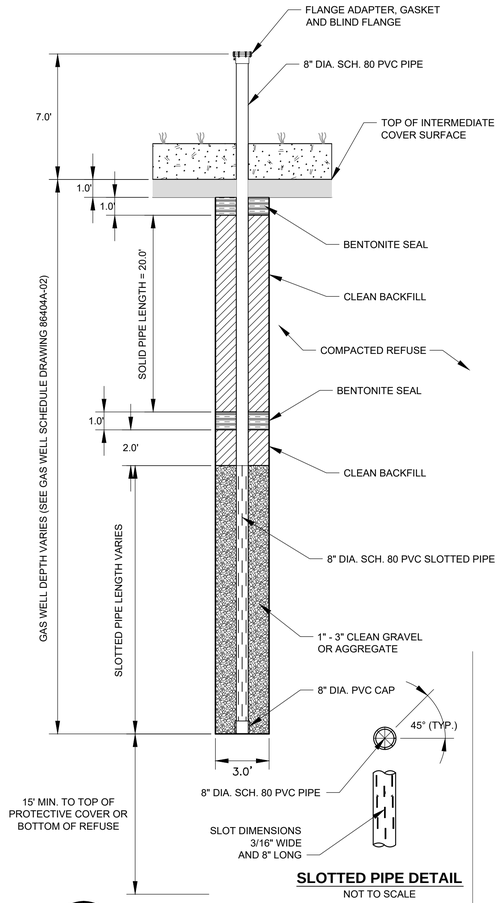

SLOTTED PIPE DETAIL
NOT TO SCALE

1/25 GAS EXTRACTION WELL
NOT TO SCALE

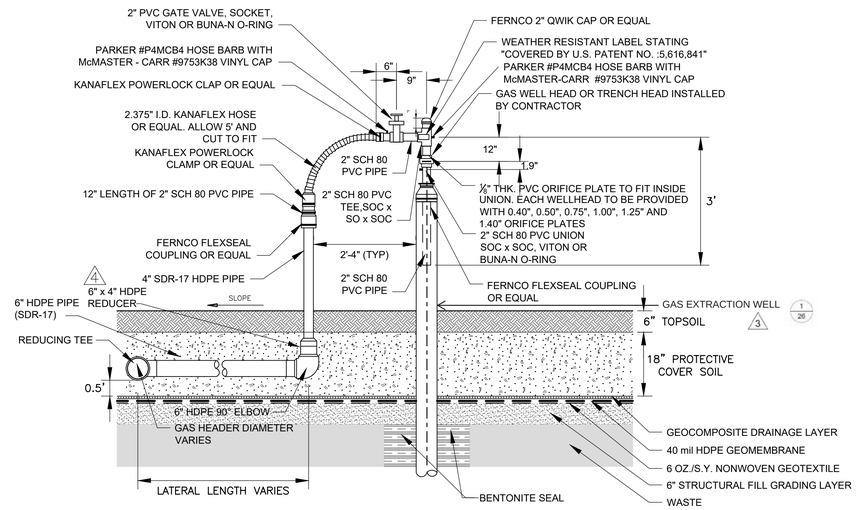

2/25 GAS EXTRACTION WELLHEAD ASSEMBLY
NOT TO SCALE

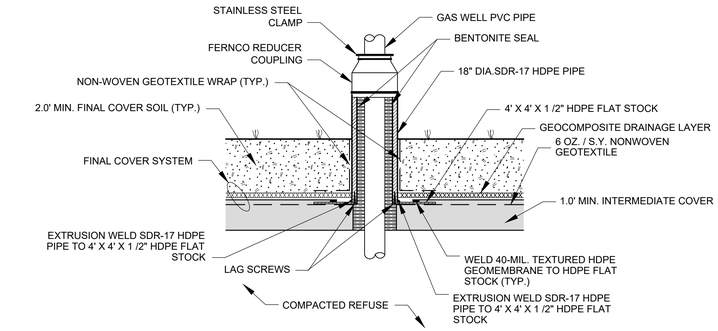

3/- GEOSYNTHETIC BOOT FOR GAS WELL DETAIL
NOT TO SCALE

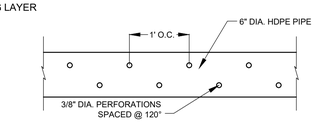

5/— HORIZONTAL GAS COLLECTOR PERFORATION DETAIL
NOT TO SCALE

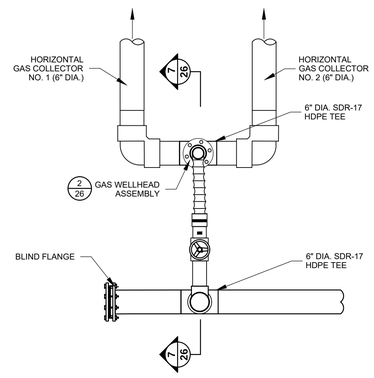

6/— TYPICAL HORIZONTAL GAS COLLECTOR CONNECTION TO GAS HEADER - PLAN
NOT TO SCALE

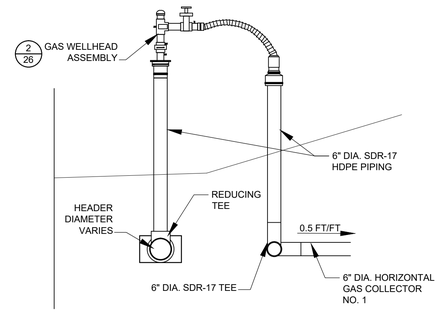

7/— TYPICAL HORIZONTAL GAS COLLECTOR CONNECTION TO GAS HEADER
NOT TO SCALE

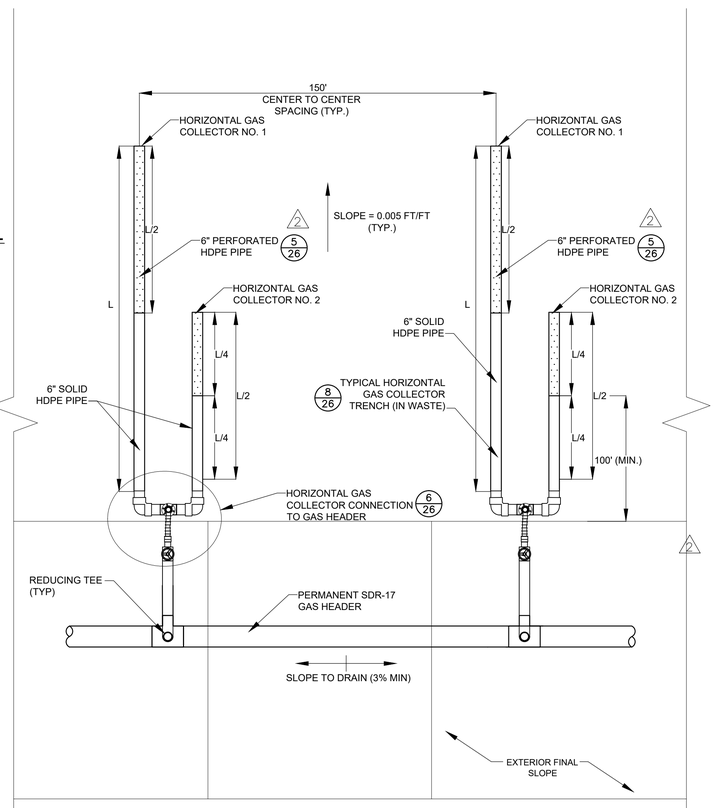

4/25 TYPICAL HORIZONTAL COLLECTION SYSTEM (IN WASTE)
NOT TO SCALE

NOTE

1.) LONGEST LENGTH OF PIPE "L" TO BE SET 50' OFF OF THE INTERMEDIATE SLOPE OR 100' OFF OF EXTERIOR FINAL SLOPE. BEGIN PERFORATED PIPING AT 100' (MIN.) FROM EXTERIOR SLOPE.
2.) SEE SCHEDULE THIS SHEET FOR PIPE LENGTHS.

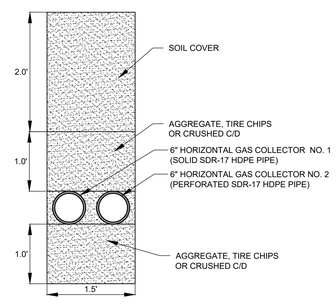

8/— TYPICAL HORIZONTAL GAS COLLECTOR TRENCH (IN WASTE)
NOT TO SCALE

HORIZONTAL GAS COLLECTION SYSTEM SCHEDULE

Horizontal Gas Collector	Collection Pipe	Solid Length (ft)	Slotted Length (ft)	Total Length (ft)
EW-2-H1	1	547	547	1094
	2	273	274	547
EW-2-H2	1	714	714	1428
	2	357	357	714
EW-2-H3	1	679	679	1358
	2	339	340	679
EW-3-H1	1	644	644	1288
	2	322	322	644

NOTES:

1. THE HORIZONTAL GAS COLLECTOR TRENCH WILL CONSIST OF TWO (2) PIPES WITH A SOLID SECTION AND PERFORATED SECTION, DELINEATED AS THE SPECIFIC TRENCH NUMBER AND SUB-PIPE NUMBER. REFER TO THE PIPING SCHEDULE ON THIS DRAWING FOR THE APPROPRIATE PIPE LENGTHS ASSOCIATED WITH EACH TRENCH.
2. THE PIPE EMBEDMENT MATERIAL WILL BE A GRANULAR MATERIAL WITH A MAXIMUM PARTICLE SIZE OF 1 INCH, COMPACTED IN 9 INCH LOOSE LIFTS IN ACCORDANCE WITH THE DETAILS.
3. THE COLLECTOR PIPE TRENCHES ARE TO BE SPACED AT A MAXIMUM OF 150 FEET. THE EXACT LOCATION MAYBE ADJUSTED TO MEET FIELD CONDITIONS. THE PERFORATED SECTION SHOULD BE INSTALLED NO CLOSER THAN 100 FEET FROM THE EXTERIOR SLOPES AND 50 FEET FROM THE INTERIOR SLOPES. THE PIPES SHOULD BE INSTALLED AT A MINIMUM GRADIENT OF 0.5% AWAY FROM THE EXTERIOR LANDFILL SLOPES.
4. THE GAS HEADER SHOULD BE INSTALLED AT A MINIMUM OF 3% WITHIN THE WASTE MASS.
5. ALL HORIZONTAL COLLECTORS ARE TO BE CAPPED AT THEIR TEMPORARY OR PERMANENT TERMINATION.

NOTE:
1. ORIGINAL DRAWING TAKEN FROM GEOSYNTEC CONSULTANTS FILE 0319-426, DATED SEPTEMBER 2004.

REV	DATE	DES	REVISION DESCRIPTION	CADD	CHK	RVW
4	3/15/19	KSS	(GEOSYNTEC) MOVED ARROW LEADER PER DNREC COMMENTS	JK	KSS	CHP
3	2/11/19	KSS	(GEOSYNTEC) ADDED DETAIL CALLOUT	TSJ	KSS	CHP
2	3/18/15	CHC	REVISED DETAIL CALLOUTS PER DNREC COMMENTS	CHC	JB	PAW
1	10/27/14	JB	ALL GAS DETAILS WERE REVISED PER CURRENT DESIGN	GLS	JB	PAW

PROJECT
Waste Management
DELAWARE RECYCLABLE PRODUCTS, INC.
PERMIT RENEWAL FOR CELL 6 EXPANSION
NEW CASTLE, DELAWARE

PAUL A. WHITLOCK LICENSE No. 13809 DELAWARE PROFESSIONAL ENGINEER
SIGNATURE
03/18/15
DATE

TITLE
LANDFILL GAS MANAGEMENT SYSTEM DETAILS I

Golder Associates
Bristol, Pennsylvania

PROJECT No.		14-00742	FILE No.	1400742B025
DESIGN	JB	10/21/14	SCALE AS SHOWN	REV. 0
CADD	GLS	10/21/14		
CHECK	JB	10/21/14	DRAWING 26	
REVIEW	PAW	10/21/14		

Drawing file: 1400742B025-rev 2.dwg Mar 18, 2015 - 8:16am