S.I. STOREY LUMBER CO., INC.
285 SIKE STOREY RD NW
P.O. BOX 99
ARMUCHEE, GA 30105-0099
TOLL FREE: (888) 934-1605
PHONE: (706) 234-1605
FAX: (706) 235-8132
www.timbarrier.com

S.I. Storey
LUMBER COMPANY, INC.

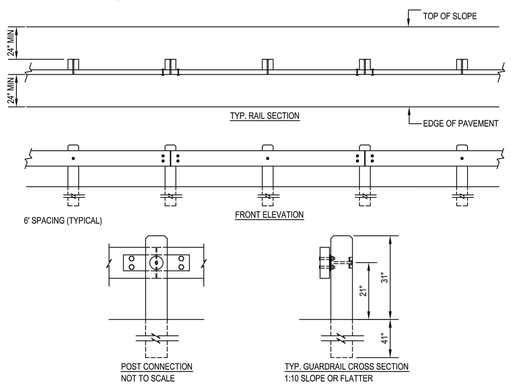

NOTES:
1. INSTALLATION TO BE COMPLETED IN ACCORDANCE WITH MANUFACTURER'S SPECIFICATIONS.
2. DO NOT SCALE DRAWINGS.
3. IF TOP OF SLOPE IS CLOSER THAN 24" INCREASE POST LENGTH TO 7'.
4. DRIVE POSTS OR AUGER, BACKFILL WITH NATIVE SOIL AND COMPACT EVERY 12".
5. ALL TIMBER #1 S4S SOUTHERN PINE, PRESSURE TREATED: AWPA-C14, WOOD FOR USE IN HWY. CONSTR.
6. TYP. POST: 8" X 8" X 6' - TYP. RAIL: 4" X 12" X 11' 11 1/2"
7. FASTENERS: ASTM A307; A242; F436 TYPE 3; A563 DH3.
8. TIMBARRIER™ SPLICE PLATE & PLATE WASHER ASTM-A588.
9. UNDER EACH BOLT HEAD ON FACE OF RAIL INSTALL ONE 7/8" WASHER.
10. REFER TO DRAWINGS 651-003b OR 651-003c FOR TERMINAL DETAILS
11. CONTRACTORS NOTE: FOR PRODUCT AND COMPANY INFORMATION VISIT www.CADdetails.com/info REFERENCE NUMBER 651-003.

TIMBARRIER™
STREETGUARD™ ROADWAY AND STREET APPLICATIONS (25 MPH MAX.)

651-003

PROTECTED BY COPYRIGHT - 10/28/03 www.CADdetails.com

1 / C6.2 TIMBER GUARDRAIL DETAIL
SCALE: AS SHOWN

S.I. STOREY LUMBER CO., INC.
285 SIKE STOREY RD NW
P.O. BOX 99
ARMUCHEE, GA 30105-0099
TOLL FREE: (888) 934-1605
PHONE: (706) 234-1605
FAX: (706) 235-8132
www.timbarrier.com

S.I. Storey
LUMBER COMPANY, INC.

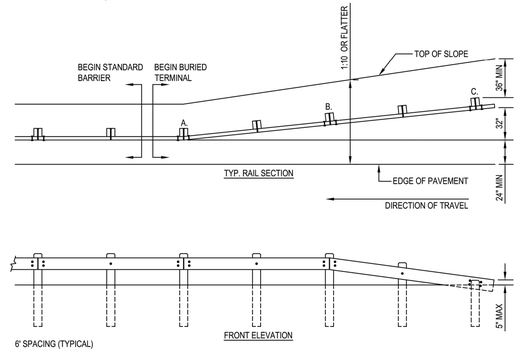

NOTES:
1. INSTALLATION TO BE COMPLETED IN ACCORDANCE WITH MANUFACTURER'S SPECIFICATIONS.
2. DO NOT SCALE DRAWINGS.
3. REFER TO DRAWING 651-003 FOR MATERIAL SPECIFICATIONS AND CONNECTION DETAIL.
4. A. SPICE PLATE T1 (PRE-BENT);
   B. SPLICE PLATE T2 (SLOTTED);
   C. ALL HARDWARE FOR THIS CONNECTION HOT DIP GALVANIZED
5. CONTRACTORS NOTE: FOR PRODUCT AND COMPANY INFORMATION VISIT www.CADdetails.com/info REFERENCE NUMBER 651-003b.

TIMBARRIER™
STREETGUARD™ BURIED-END-TERMINAL

651-003b

PROTECTED BY COPYRIGHT - 10/28/03 www.CADdetails.com

2 / C6.2 TIMBER GUARDRAIL DETAIL
SCALE: AS SHOWN

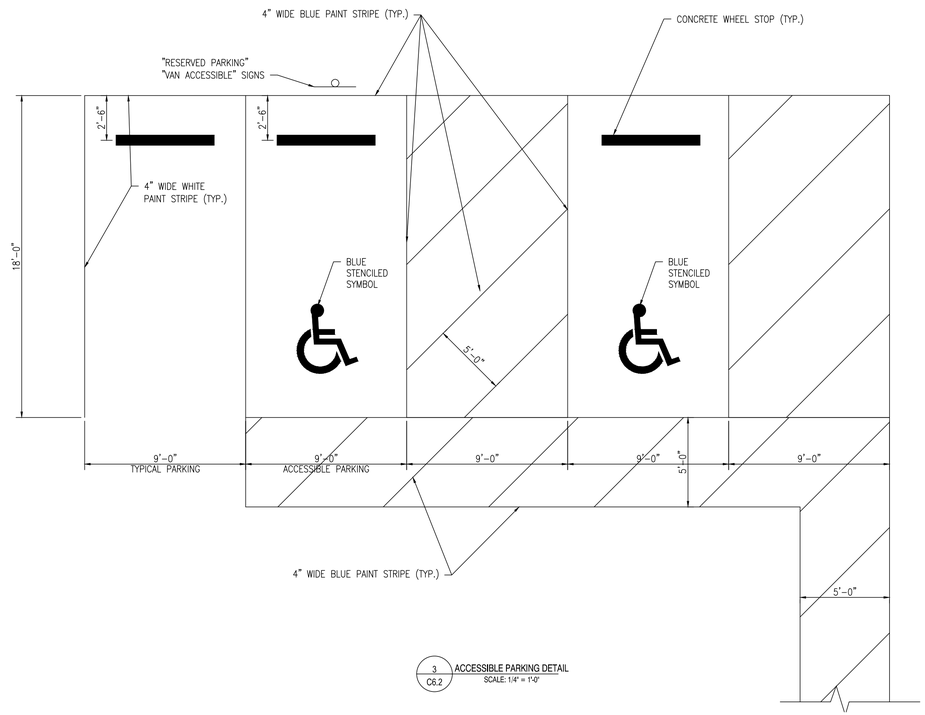

3 / C6.2 ACCESSIBLE PARKING DETAIL
SCALE: 1/4" = 1'-0"

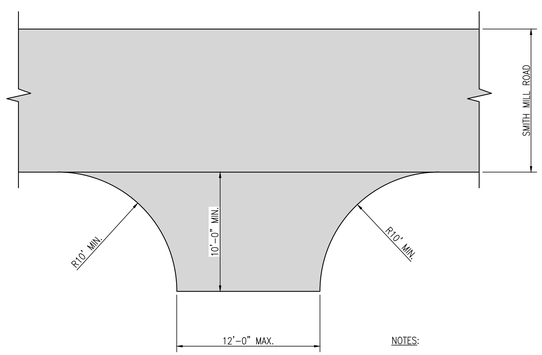

NOTES:

1. CONSTRUCT DRIVEWAY APRONS AT THE FOLLOWING LOCATIONS ON SMITH MILL ROAD:
   1.1. 518+87 RT.
   1.2. 526+30 RT.
   1.3. 529+55 RT.

2. PAVEMENT SECTION TO MATCH ADJACENT SMITH MILL ROAD SECTION.

4 / C6.2 DRIVEWAY APRON DETAIL
SCALE: NONE

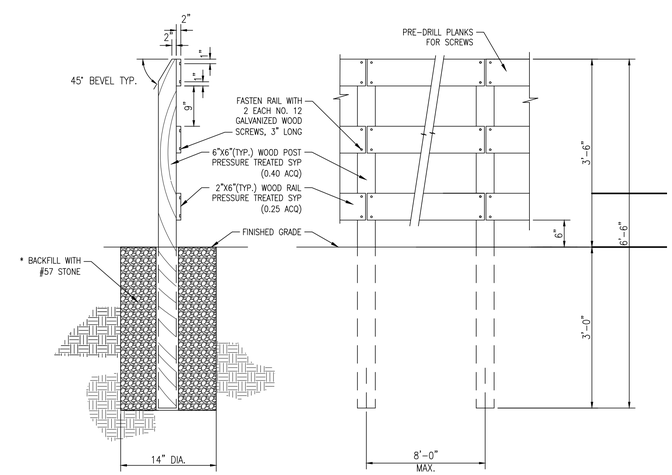

* EVERY 5TH POST SHALL BE ENCASED IN CONCRETE FOR STABILIZATION. BEGINNING POST AND END POST OF EACH RUN SHALL BE ENCASED IN CONCRETE FOR STABILIZATION.

5 / C6.2 TIMBER FENCE DETAIL
SCALE: NONE

REVISIONS:
DATE: DESCRIPTION: BY:

WCCSP TRI-VALLEY TRAIL CONSTRUCTION PLANS

TYPICAL CONSTRUCTION DETAILS

SEAL:
WALTER J. HOEY, III
REGISTERED
NO. 11204
DELAWARE
PROFESSIONAL ENGINEER

CIVIL ENGINEER:
CENTURY ENGINEERING
CONSULTING ENGINEERS, SURVEYORS
4134 N. DUPONT HWY.
DOVER, DELAWARE 19901

CEI CONTRACT NO.: 125002.17

DELAWARE DEPARTMENT OF NATURAL RESOURCES AND ENVIRONMENTAL CONTROL

DESIGNED BY: WJH
DRAWN BY: DLD
CHECKED BY: SLR
DATE: NOVEMBER 14, 2016
SCALE: AS NOTED
SHEET NO.: C6.2
CONTRACT NO.: 2016-WCCSP-100

G:\PROJECTS\125002.02 (DNREC Civil Engineering Services - 2017)\125002.02_(Tri-Valley Trail Concept Plan)\CADD FILES\Sheets\FinalConstructionSet\C6-2_ConstructionDetails.dwg, 11/14/2016 4:58 PM

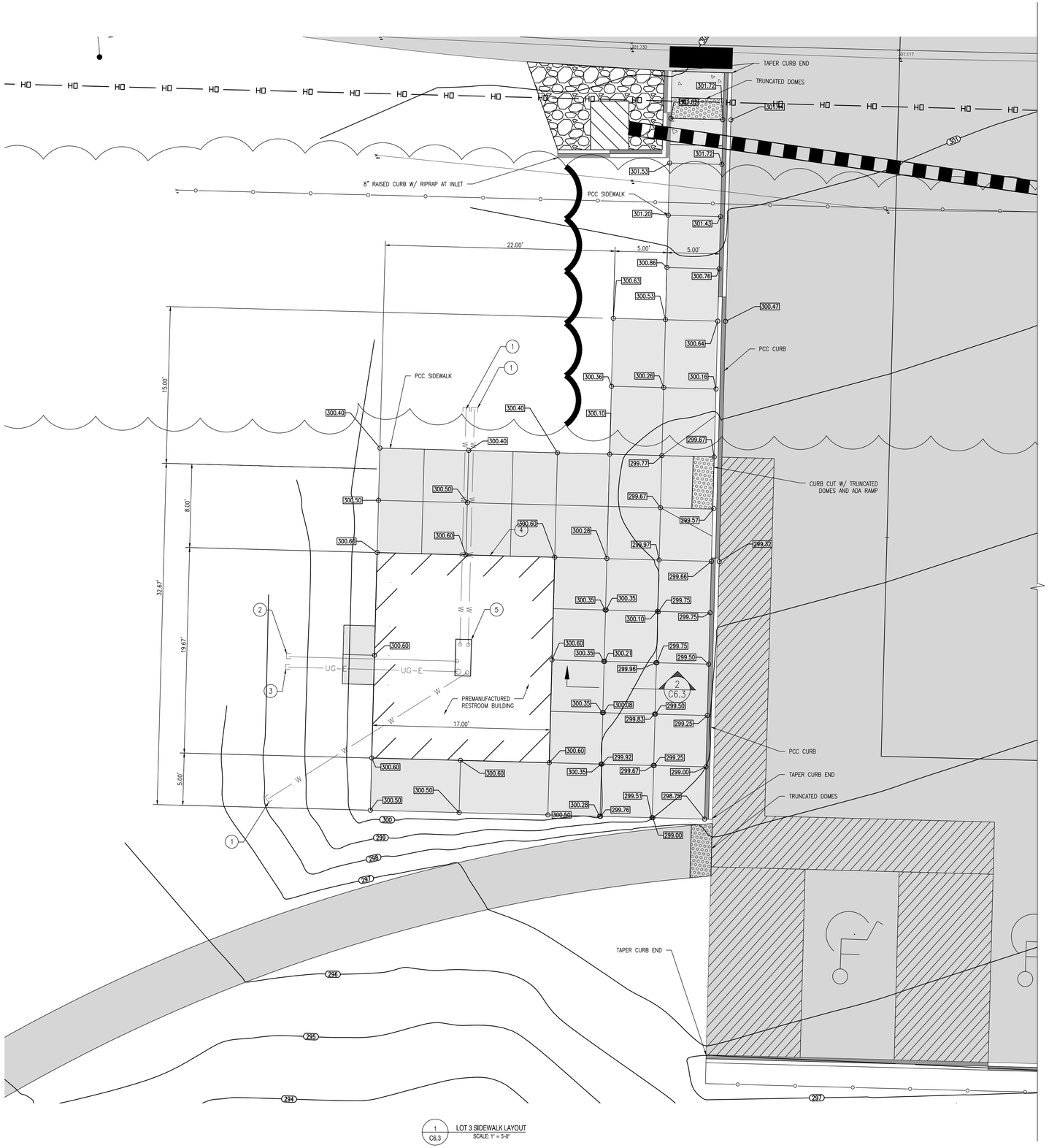

1 C6.3 LOT 3 SIDEWALK LAYOUT
SCALE: 1" = 5'-0"

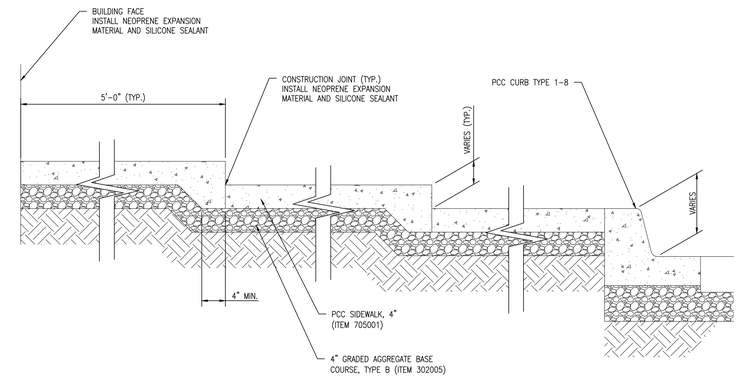

2 C6.3 LOT 3 SIDEWALK SECTION
SCALE: 1" = 1'-0"

NOTES: (X)

1. 2" HDPE WATER STUB W/ CAPPED END.
2. 6" PVC SANITARY STUB W/ CAPPED END.
3. 3" PVC ELECTRIC STUB W/ CAPPED END.
4. 17'-0"x 19'-8" PREMANUFACTURED RESTROOM.
5. UTILITY CUT-OUT IN BUILDING CONCRETE SLAB.

ADDITIONAL NOTES:

1. CONTRACTOR SHALL REFER TO PLAN SHEETS C8.1 THROUGH C8.6 FOR ADDITIONAL RESTROOM INFORMATION.
2. ALL PROPOSED SANITARY SEWER LATERAL PIPING SHALL BE PVC (POLYVINYL CHLORIDE) SCHEDULE 35 PIPING UNLESS OTHERWISE REQUIRED BY THE NEW CASTLE COUNTY DEPARTMENT OF SPECIAL SERVICES.
3. ALL WATER PIPING SHALL BE HDPE SDR9, UNLESS NOTED OTHERWISE.
4. CONDUIT FOR UNDERGROUND ELECTRICAL SHALL BE PVC SCHEDULE 80.
6. EXTEND ALL UTILITY STUBS 5 FEET BEYOND EDGE OF SIDEWALK, CAP, AND SET WITNESS POSTS.
7. PCC CURB SHALL TAPER AT EACH END.

0' 5' 10' 20'
SCALE: 1" = 5'

REVISIONS:

DATE:	DESCRIPTION:	BY:

WCCSP TRI-VALLEY TRAIL CONSTRUCTION PLANS

TYPICAL CONSTRUCTION DETAILS

SEAL:
WALTER J. HOEY, III
REGISTERED
NO. 11204
DELAWARE
PROFESSIONAL ENGINEER

CIVIL ENGINEER:
CENTURY ENGINEERING
CONSULTING ENGINEERS, SURVEYORS
4134 N. DUPONT HWY.
DOVER, DELAWARE 19901

CEI CONTRACT NO.: 125002.17

DELAWARE DEPARTMENT OF NATURAL RESOURCES AND ENVIRONMENTAL CONTROL

DESIGNED BY: WJH
DRAWN BY: DLD
CHECKED BY: SLR
DATE: NOVEMBER 14, 2016
SCALE: AS SHOWN
SHEET NO.: C6.3
CONTRACT NO.: 2016-WCCSP-100

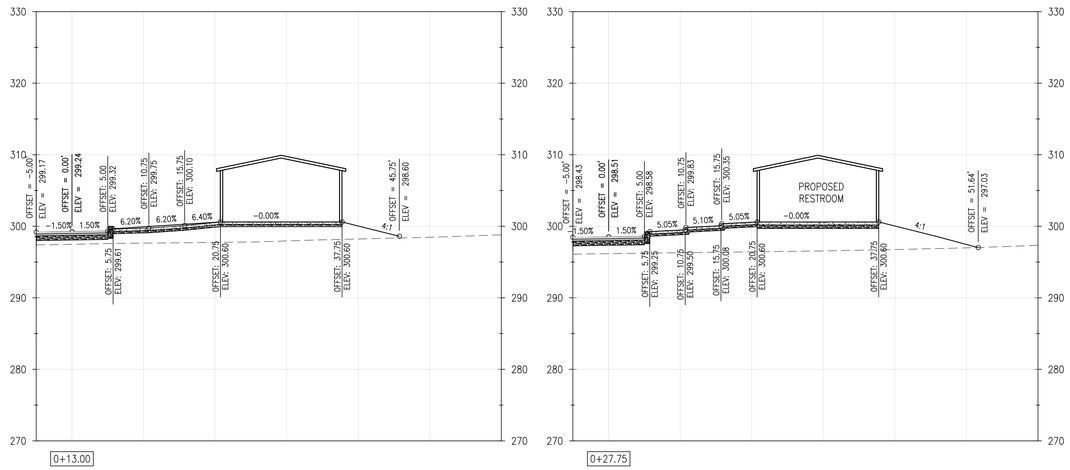

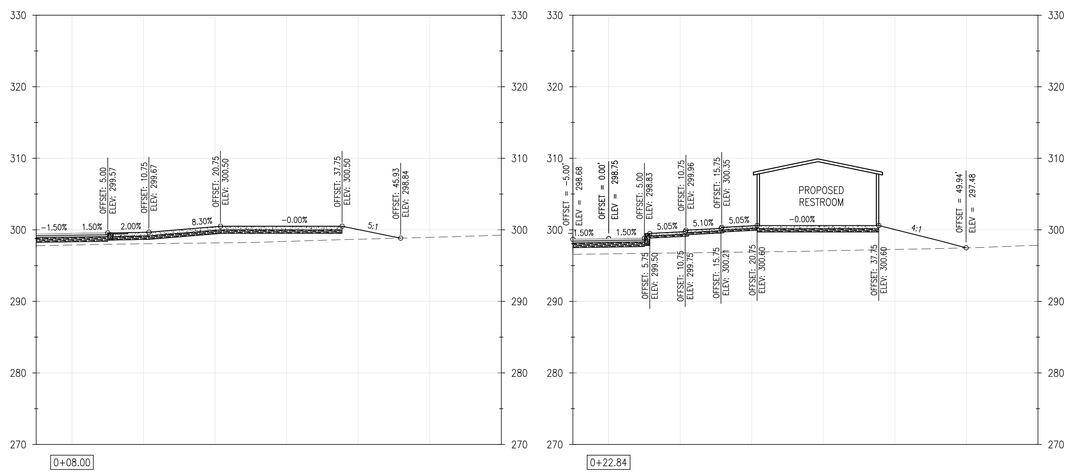

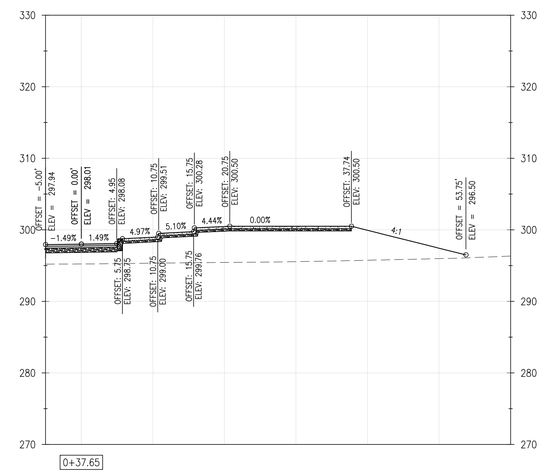

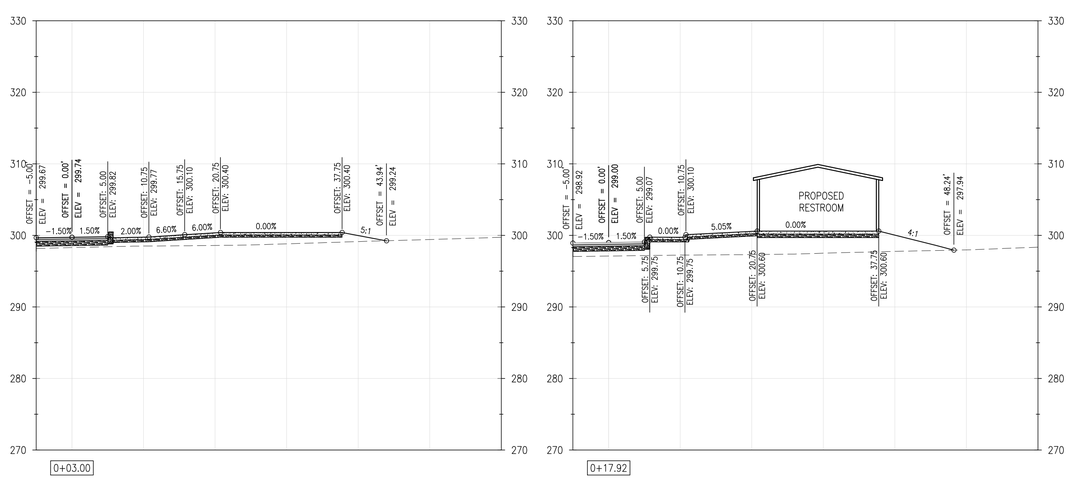

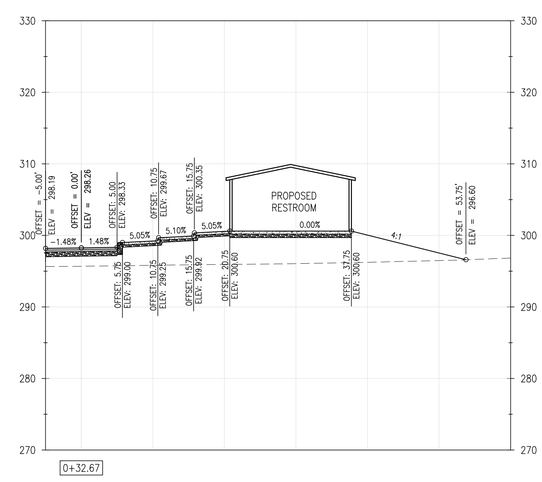

0' 10' 20' 30'
SCALE: 1" = 10'

REVISIONS:

DATE:	DESCRIPTION:	BY:

WCCSP TRI-VALLEY TRAIL CONSTRUCTION PLANS

TYPICAL CONSTRUCTION DETAILS

SEAL:

WALTER J. HOLLOWELL REGISTERED NO. 11204 DELAWARE PROFESSIONAL ENGINEER

CIVIL ENGINEER:

CENTURY ENGINEERING
CONSULTING ENGINEERS, SURVEYORS
4134 N. DUPONT HWY.
DOVER, DELAWARE 19901

CEI CONTRACT NO.: 125002.17

DELAWARE DEPARTMENT OF NATURAL RESOURCES AND ENVIRONMENTAL CONTROL

DESIGNED BY: WJH

DRAWN BY: DLD

CHECKED BY: SLR

DATE: NOVEMBER 14, 2016

SCALE: AS SHOWN

SHEET NO.: C6.4

CONTRACT NO.: 2016-WCCSP-100

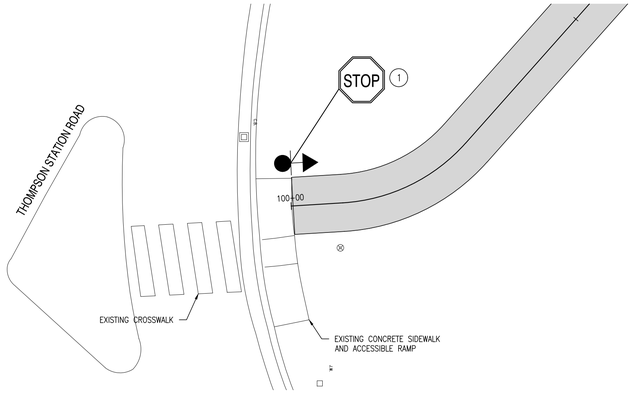

1 / C7.1 SIGNING AND STRIPING - THOMPSON STATION ROAD
SCALE: 1" = 10'

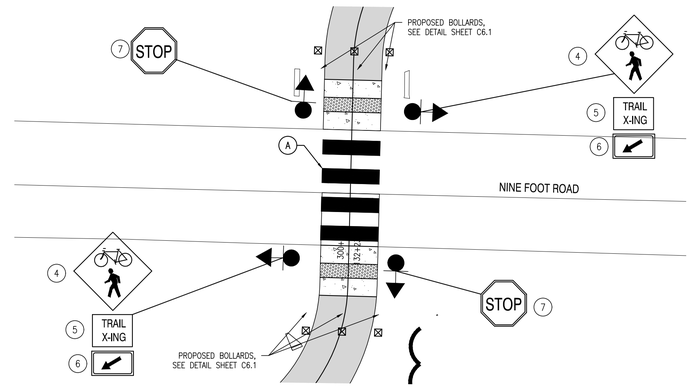

2 / C7.1 SIGNING AND STRIPING - NINE FOOT ROAD
SCALE: 1" = 10'

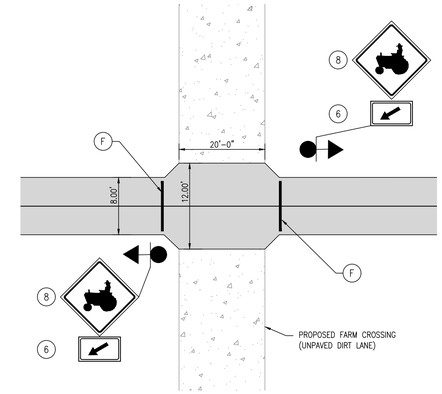

5 / C7.1 FARM CROSSING SIGNING AND STRIPING
SCALE: 1" = 10'

PAVEMENT MARKING S LEGEND	
SYMBOL	ITEM
A	24" SOLID WHITE LATEX PAINT PAVEMENT STRIPING
B	16" SOLID WHITE ALKYD THERMOPLASTIC PAVEMENT STRIPING
C	BLUE LATEX PAINT SYMBOL/LEGEND
D	4" WHITE LATEX PAINT PAVEMENT STRIPING
E	5" BLUE LATEX PAINT PAVEMENT STRIPING
F	4" WHITE EPOXY PAVEMENT STRIPING

NOTE: NOT ALL SYMBOLS USED ON THIS DRAWING.

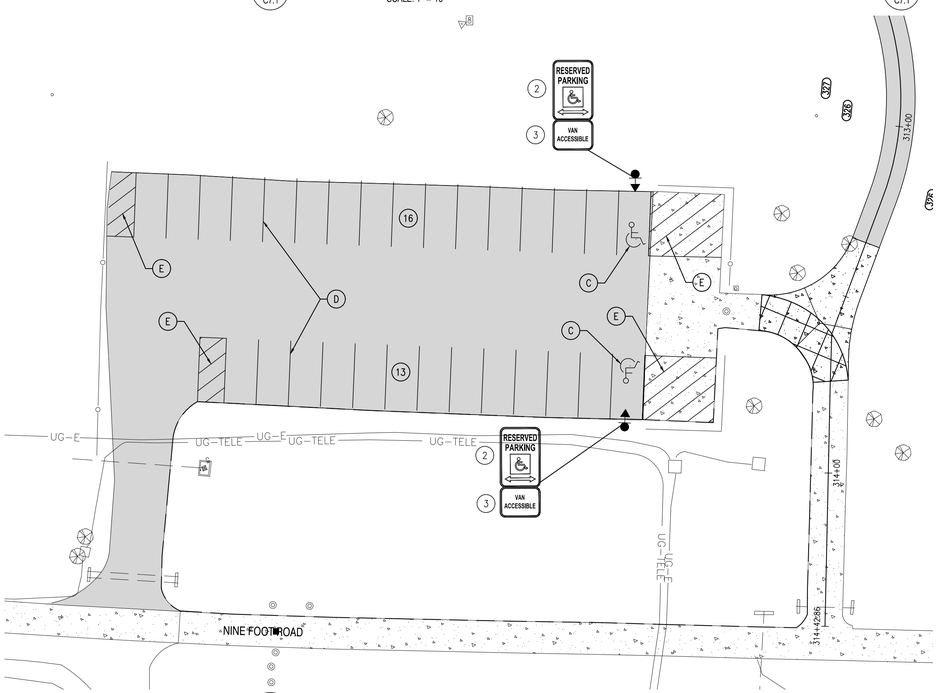

3 / C7.1 SIGNING AND STRIPING - PARKING LOT 1
SCALE: 1" = 20'

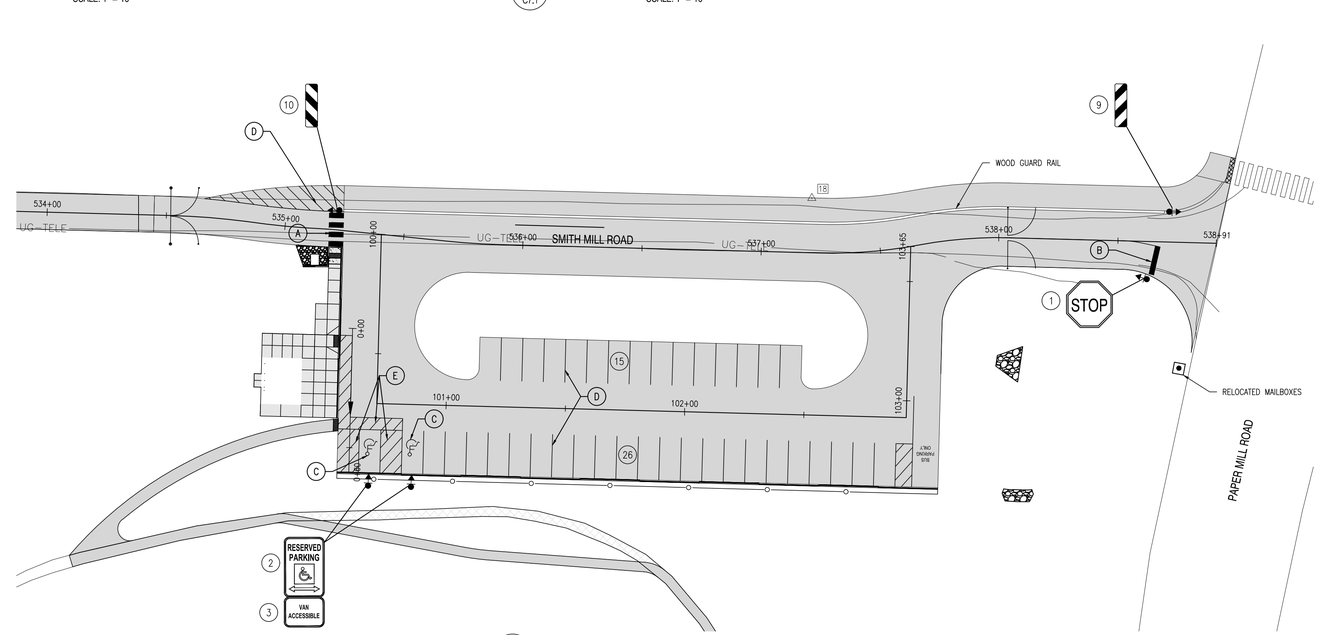

4 / C7.1 SIGNING AND STRIPING - PARKING LOT 3
SCALE: 1" = 30'

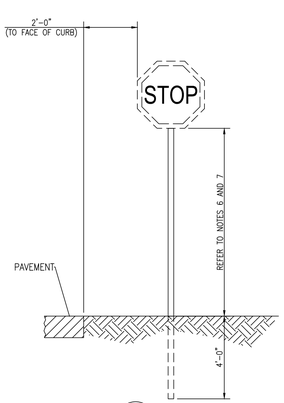

5 / C7.1 SIGN POST DETAILS
SCALE: 3/4" = 1'-0"

NOTES:

1. DESIGN, FABRICATION AND INSTALLATION OF ALL PERMANENT SIGNING SHALL BE AS OUTLINED IN THE "GUIDE FOR FABRICATION AND INSTALLATION OF TRAFFIC CONTROL DEVICES" LATEST EDITION.
2. SIGNS TO BE INSTALLED WOODEN, 4"x4" SOUTHERN YELLOW PINE PRESSURE TREATED POST, ACQ 0.4 PCF.
3. SIGNS GREATER THAN 36 INCHES IN WIDTH SHALL BE INSTALLED ON TWO (2) POSTS.
4. IF NO CURB, PLACE SIGN 6'-0" FROM EDGE OF PAVEMENT, OR AS DIRECTED BY OWNER.
5. ALL SIGNS SHALL BE INSTALLED ON TIMBER POSTS USING A MINIMUM OF TWO (2) 5/16" GALVANIZED BOLTS WITH TWO (2) GALVANIZED WASHERS AND LOCK NUTS.
6. WARNING AND REGULATORY SIGN PANELS SHALL BE POSITIONED NOT LESS THAN 7'-0" FROM FINISHED GRADE TO BOTTOM OF SIGN.
7. ACCESSIBLE PARKING SIGNS SHALL BE POSITIONED 5'-0" FROM FINISHED GRADE UNLESS LOCATED IN WALKWAY, AT WHICH TIME THEY SHALL BE POSITIONED 7'-0" FROM FINISHED GRADE.

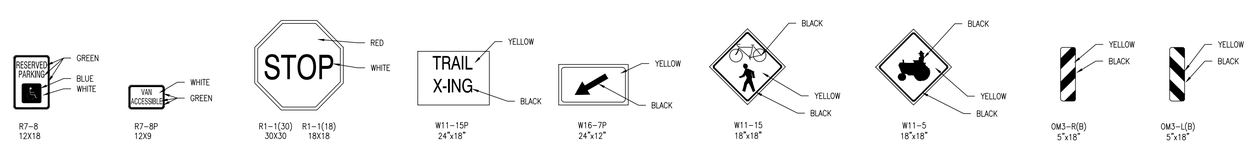

6 / C7.1 SIGN DETAILS
SCALE: N.T.S.

NOTE:
REFER TO SHEET C6.2 FOR STRIPING DETAILS AT ACCESSIBLE PARKING.

0' 30' 60' 90'
SCALE: 1" = 30'

#	SHEET NO.	PLAN INDICATOR	CODE	QTY.	DESCRIPTION	ASSEMBLY NO.	SIGN WIDTH (IN)	SIGN HEIGHT (IN)	SIGN AREA (SF)	ITEM 749687 SINGLE POST (EACH)			ITEM 749690 MULTI POST (POST NEEDED)			POST INSTALLATION TYPE	Code X11 12' Post (W/ Basepost)	ITEM 749688 4" HOLE, 0-6" (EACH)	ITEM 749689 4" HOLE, >6" (EACH)	REMARKS
										SIGN DISPOSTION	REMOVE	INSTALL	SIGN DISPOSTION	REMOVE	INSTALL					
3	C7.1	1	R1-1(30)	1	STOP		30"	30"	6.25	NEW		1				SOIL	1	0	0	
428	C7.1	2	R7-8	4	RESERVED PARKING (Disabilities - symbols)		12"	18"	1.5	NEW		4				SOIL	4	0	0	
429	C7.1	3	R7-8P	4	VAN ACCESSIBLE (plaque)		18"	9"	1.125	ADD TO EXIST.		4					0	0	0	
1226	C7.1	4	W11-15(18)	2	BIKE - PEDESTRIAN (Symbol) - 18x18		18"	18"	2.25	NEW		2				SOIL	2	0	0	
1235	C7.1	5	W11-15P(18)	2	TRAIL X-ING (plaque) - 18x12		18"	12"	1.5	ADD TO EXIST.		2					0	0	0	
1357	C7.1	6	W16-7P_R(24)	2	RIGHT DOWNWARD DIAGONAL ARROW (plaque) - 24x12		24"	12"	2	ADD TO EXIST.		2					0	0	0	
1	C7.1	7	R1-1(18)	2	STOP		18"	18"	2.25	NEW		2				SOIL	2	0	0	
	C7.1	8	W11-5a(18)	6	FARM MACHINERY (Symbol)		18"	18"	2.25	NEW		6				SOIL	6	0	0	
1962	C7.1	9	OM3-R(B)	1	TYPE 3 OBJECT MARKER (Bike path)		5"	18"	0.63	NEW		1					1	0	0	
1958	SC7.1	10	OM3-L(B)	1	TYPE 3 OBJECT MARKER (Bike path)		5"	18"	0.63	NEW		1					1	0	0	

REVISIONS:
DATE: DESCRIPTION: BY:

WCCSP TRI-VALLEY TRAIL CONSTRUCTION PLANS

SIGNING AND STRIPING PLAN

SEAL:
WALTER J. HOEY III
REGISTERED
NO. 11204
DELAWARE
PROFESSIONAL ENGINEER

CIVIL ENGINEER:
CENTURY ENGINEERING
CONSULTING ENGINEERS, SURVEYORS
4134 N. DUPONT HWY.
DOVER, DELAWARE 19901
CEI CONTRACT NO.: 125002.17

DELAWARE DEPARTMENT OF NATURAL RESOURCES AND ENVIRONMENTAL CONTROL

DESIGNED BY: WJH
DRAWN BY: DLD
CHECKED BY: SLR
DATE: NOVEMBER 14, 2016
SCALE: 1" = 30'
SHEET NO.: C7.1
CONTRACT NO.: 2016-WCCSP-100

G:\PROJECTS\125002.00 DNREC Civil Engineering Services - - 2012\\125002.02_Tri-Valley Trail Concept Plan\CADD FILES\Sheets\FinalConstructionSet\C7-1_SigningStriping.dwg, 11/29/2016 10:23 AM

CORTEZ SECTIONAL

NOTES

1. BUILDING IS DESIGNED TO COMPLY WITH THE 2013 CALIFORNIA BUILDING STANDARDS CODE (CBSC).
2. DESIGN COMPLIES WITH THE PROVISIONS OF THE 2013 CBSC CODE FOR THE FOLLOWING LOADS:
   ROOF SNOW LOAD = 250 PSF
   FLOOR LOAD = 400 PSF
   IBC DESIGN SPECTRAL RESPONSE S_S = 2.165, S_1 = 1.389
   SITE CLASS D
   SEISMIC USE GROUP: II
   SEISMIC DESIGN CATEGORY: E
   BEARING WALL SYSTEM R = 4.0
   BASIC WIND SPEED = 150 MPH (3-SECOND GUST)
   WIND EXPOSURE C, I = 1.0
3. BUILDING TYPE: IBC TYPE V-B
   OCCUPANCY: U
   EXTERIOR WALLS: 1-HR RATED PER IBC TABLE 721.1(2), ITEM 4-1.1
4. CONCRETE STRENGTH f'ci = 2500 PSI INITIAL f'c = 5000 PSI
   FINAL AIR ENTRAINMENT 5 1/2% ± 1% IN PLASTIC CONCRETE.
   REINFORCING STEEL: GRADE 60 Fy = 60 KSI
   MINIMUM LAP 18" AT SPLICES. TIE BARS WITH DOUBLE ANNEALED 16 GA IRON WIRE. REINFORCING TO BE PLACED IN CENTER OF PANEL UNO. ALL BENDS IN REINFORCING SHALL HAVE A MINIMUM RADIUS OF 6x THE BAR DIAMETER.
   WELDED WIRE FABRIC(W.W.F.): 4x4xW8xW8, Fy=65 KSI (OR EQUIVAL). COMPLY WITH ASTM A82, SMOOTH WIRE, MIN. LAP 2 SQUARES.
5. EMBEDDED ITEMS IDENTIFIED ON DRAWINGS (i.e. PS-2, R301) REFER TO CXT STANDARD EMBEDMENT CATALOG.
6. BACK OF PANELS TO HAVE SMOOTH TROWEL FINISH UNO. ALL SURFACES TO BE TEXTURED ARE NOTED ON PANEL DWG'S
7. REFER TO SEPARATE CXT INCORPORATED SPECIFICATIONS COVERING DESIGN, MATERIALS, PRODUCTION, AND INSTALLATION CRITERIA FOR SPECIFIC STYLE OF BUILDING.
8. ALL REBAR BENDS ARE TO HAVE A MINIMUM RADIUS OF 6x THE BAR DIAMETER
9. INSTALLATION TO MEET APPLICABLE LOCAL, STATE & FEDERAL CODES, BY OTHERS.
10. ADEQUATE PLUMBING FACILITIES MUST BE PROVIDED IN ACCORDANCE WITH 2012 IBC (NOT BY CXT)

PANEL MARK NO. KEY PLAN

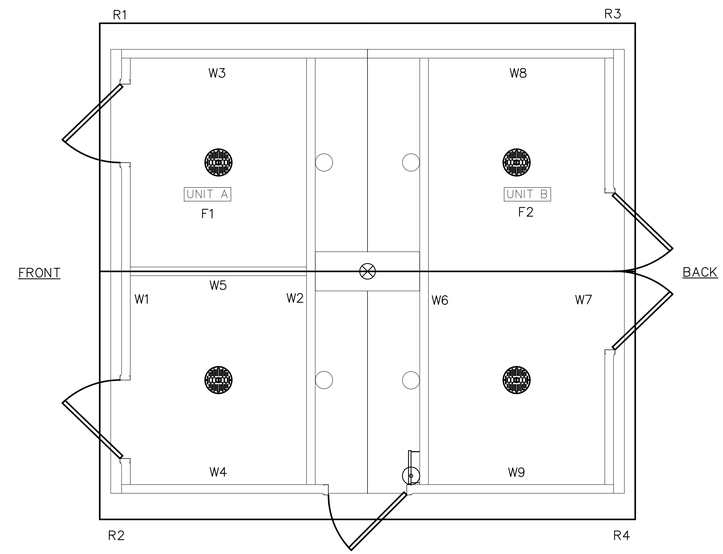

APPLICABLE CODES

2013 CALIFORNIA BUILDING STANDARDS CODE
CALIFORNIA CODE OF REGULATIONS, TITLE 24

INDEX OF DRAWINGS

NO.	TITLE
CRS-01	COVER SHEET
CRS-02	HANDLING INSTRUCTIONS
CRS-03	FLOOR PLAN
CRS-04	BUILDING ELEVATIONS
CRS-05	INTERIOR ELEVATIONS
CRS-06	DETAILS
CRS-07	WALL PANEL W1
CRS-08	WALL PANEL W2
CRS-09	WALL PANEL W3
CRS-10	WALL PANEL W4
CRS-11	WALL PANEL W5
CRS-12	WALL PANEL W6
CRS-13	WALL PANEL W7
CRS-14	WALL PANEL W8
CRS-15	WALL PANEL W9
CR-16	FLOOR SLAB F1
CR-17	FLOOR SLAB F2
CRS-18	ROOF SLAB R1
CRS-19	ROOF SLAB R2
CRS-20	ROOF SLAB R3
CRS-21	ROOF SLAB R4
CRS-22	FOUNDATION DETAIL
CRS-23	FLOOR DRAIN LOCATIONS & BELOW FLOOR PIPING
CRS-24	WATER, WASTE & VENT PIPING PLANS & NOTES
CRS-25	PLUMBING SCHEDULE, DIAGRAMS & NOTES
CRS-26	ELECTRICAL NOTES & SCHEDULES
CRS-27	ELECTRICAL PLAN, LEGEND & NOTES
CRS-28	MATERIAL LIST

NOTES:

1. THE CONTRACTOR SHALL REFER TO SECTION 132800 – RESTROOM BUILDING, OF THE SPECIFICATION PACKET FOR MODIFICATIONS TO THE STANDARD CXT RESTROOM BUILDING THAT SHALL BE INCORPORATED INTO THIS PROJECT.
2. SHEETS C8.1 THROUGH C8.6 PROVIDED FOR BIDDING PURPOSES ONLY BY CXT PRECAST PRODUCTS. THESE PLANS MAY BE INCOMPLETE.

CASTING TOLERANCES:

OVERALL LENGTH OR WIDTH
10 FT OR UNDER = ± 1/8"
10 TO 20 FT = +1/8", -3/16"
20 TO 40 FT = ±1/4"

TOTAL THICKNESS = -1/8, +1/4

VARIATION FROM SQUARE = ±1/8 PER 6 FT OF DIAGONAL

LOCAL SMOOTHNESS = 1/4" IN 10 FT

SWEEP = ±1/4"

POSITION OF TENDONS = ±1/4"

POSITION OF BLOCKOUTS = ±1/4"

SIZE OF BLOCKOUTS = ±1/4"

POSITION OF EMBEDS = ±1/4"

TIPPING AND FLUSHNESS OF PLATES = +1/16, -1/4

BOWING = LENGTH/360

END SQUARENESS = ±1/8"

CALIFORNIA STATE TAG, APPROVAL, & PE DRAWINGS REQUIRED

WALL TEXTURE: BARNWOOD
WALL PAINT: WESTERN WHEAT

ROOF TEXTURE: CEDAR SHAKE
ROOF COLOR: CAPPUCCINO CREAM

TRIM PAINT: BROWN

CXT INCORPORATED
CONTROLLED COPY
IF THIS STATEMENT IS NOT PRINTED IN RED, DOCUMENT MAY NOT BE CURRENT
ISSUED FOR PRODUCTION BY:Robert D. Walker

3808 N. Sullivan Bldg. #7 Spokane, WA 99216
CXT Precast Products
901 N. Highway 77 Hillsboro, TX 76645

PROJECT TITLE
CORTEZ SECTIONAL
BUILDING NUMBER CRS-016

NOTICE
The information contained herein is proprietary and the exclusive property of CXT Incorporated. The information may only be used by the original recipient for the purpose intended. Reproduction or distribution of this information is strictly prohibited without the prior written consent of CXT Incorporated. By allowing use of this information, CXT Incorporated grants no warranty, express or implied, including a warranty of merchantability or of fitness for a particular purpose.
CXT Incorporated

REV.	DESCRIPTION	APPROVAL	DATE

SCALE	3/16"=1'-0"	DATE	06-22-16
DRAWN	ROB D WALKER	FILE NO.	CRS-016
CHECKED	RDW	PLOT	64

COVER SHEET

DWG NO.	SHEET	REV.
CRS-01	1 / 28	

REVISIONS:
DATE: DESCRIPTION: BY:

WCCSP TRI-VALLEY TRAIL
CONSTRUCTION PLANS

RESTROOM CONSTRUCTION DETAILS

SEAL:
WALTER J. HOEY, III
REGISTERED
NO. 11204
DELAWARE
PROFESSIONAL ENGINEER

CIVIL ENGINEER:
CENTURY ENGINEERING
CONSULTING ENGINEERS, SURVEYORS
4134 N. DUPONT HWY.
DOVER, DELAWARE 19901
CEI CONTRACT NO.: 125002.17

DELAWARE DEPARTMENT OF NATURAL RESOURCES AND ENVIRONMENTAL CONTROL

DESIGNED BY: WJH
DRAWN BY: DLD
CHECKED BY: SLR
DATE: NOVEMBER 14, 2016
SCALE: 1" = 40'
SHEET NO.: C8.1
CONTRACT NO.: 2016-WCCSP-100

C:\PROJECTS\125002.02 (DWREC Civil Engineering Services - 2012)\125002.02_Tri-Valley Trail Concept Plan\CADD FILES\Sheets\FinalConstructionSet\C8-1_RestroomConstructionDetails.dwg, 11/14/2016 5:02 PM

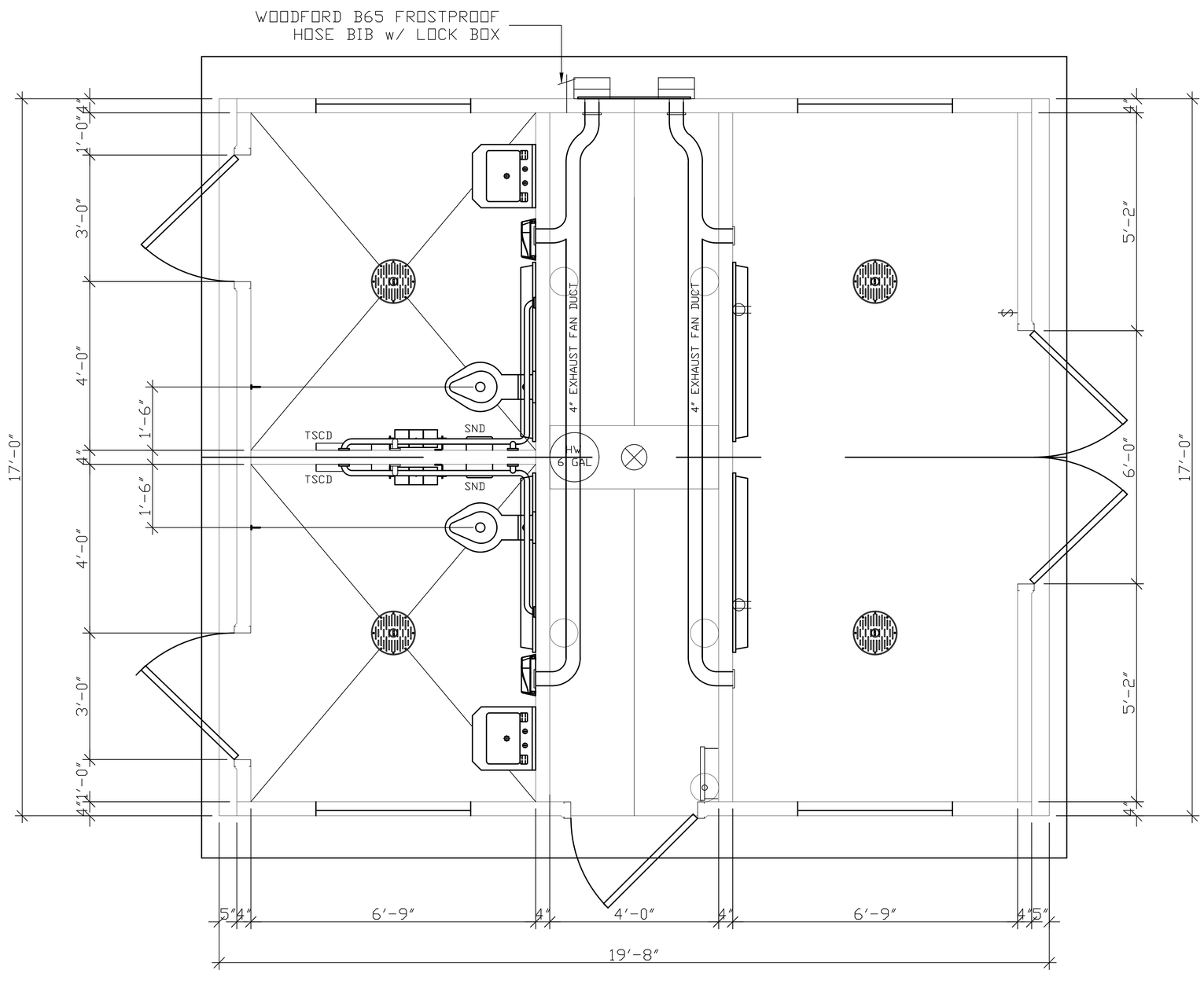

CXT INCORPORATED
CONTROLLED COPY
IF THIS STATEMENT IS NOT PRINTED
IN RED, DOCUMENT MAY NOT BE CURRENT
ISSUED FOR PRODUCTION BY:Robert D. Walker

3808 N. Sullivan Bldg. #7 Spokane, WA 99216

Precast Products

901 N. Highway 77 Hillsboro, TX 76645

PROJECT TITLE

CORTEZ SECTIONAL
BUILDING NUMBER CRS-016

NOTICE

The information contained herein is proprietary and the exclusive property of CXT Incorporated. The information may only be used by the original recipient for the purpose intended. Reproduction or distribution of this information is strictly prohibited without the prior written consent of CXT Incorporated. By allowing use of this information, CXT Incorporated grants no warranty, express or implied, including a warranty of merchantability or of fitness for a particular purpose.

CXT Incorporated

REV.	DESCRIPTION	APPROVAL	DATE

SCALE	3/8"=1'-0"	DATE	06-22-16
DRAWN	ROB D WALKER	FILE NO.	CRS-016
CHECKED	RDW	PLOT	32

FLOOR PLAN

DWG NO. CRS-03

SHEET 3 / 28

REV.

REVISIONS:

DATE:	DESCRIPTION:	BY:

WCCSP TRI-VALLEY TRAIL CONSTRUCTION PLANS

RESTROOM CONSTRUCTION DETAILS

SEAL:

CIVIL ENGINEER:

CENTURY ENGINEERING
CONSULTING ENGINEERS, SURVEYORS
4134 N. DUPONT HWY.
DOVER, DELAWARE 19901

CEI CONTRACT NO.: 125002.17

DELAWARE DEPARTMENT OF NATURAL RESOURCES AND ENVIRONMENTAL CONTROL

DESIGNED BY: WJH

DRAWN BY: DLD

CHECKED BY: SLR

DATE: NOVEMBER 14, 2016

SCALE:

SHEET NO.: C8.2

CONTRACT NO.: 2016-WCCSP-100

G:\PROJECTS\125002.0E (DNREC Cell Engineering Services - 2012)\125002.02_(Tri-Valley Trail Concept Plan)\CADD FILES\Sheets\FinalConstructionSet\C8-2_RestroomConstructionDetails.dwg, 11/14/2016 5:03 PM

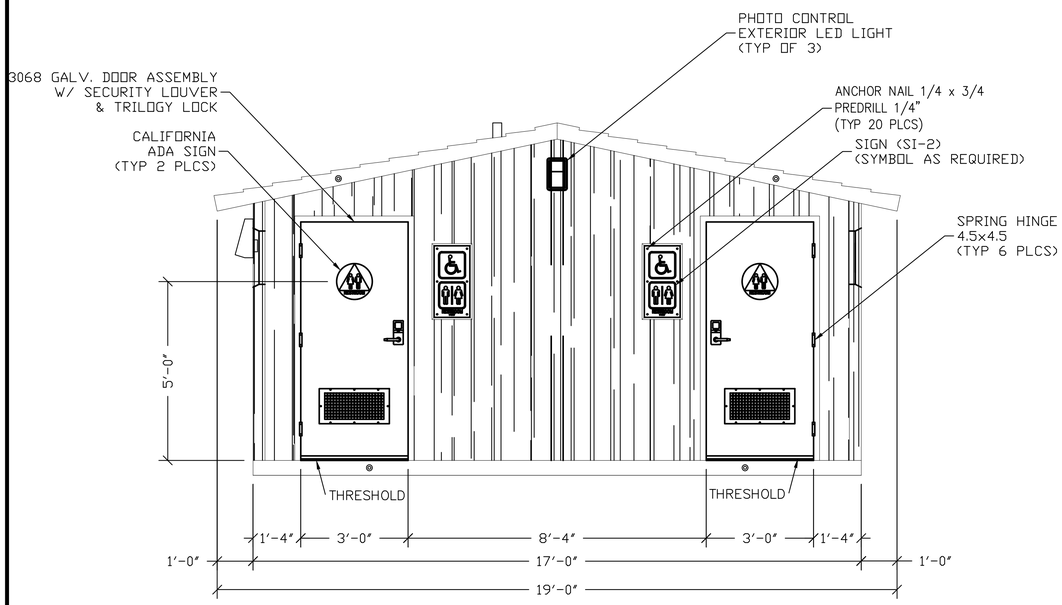

FRONT ELEVATION

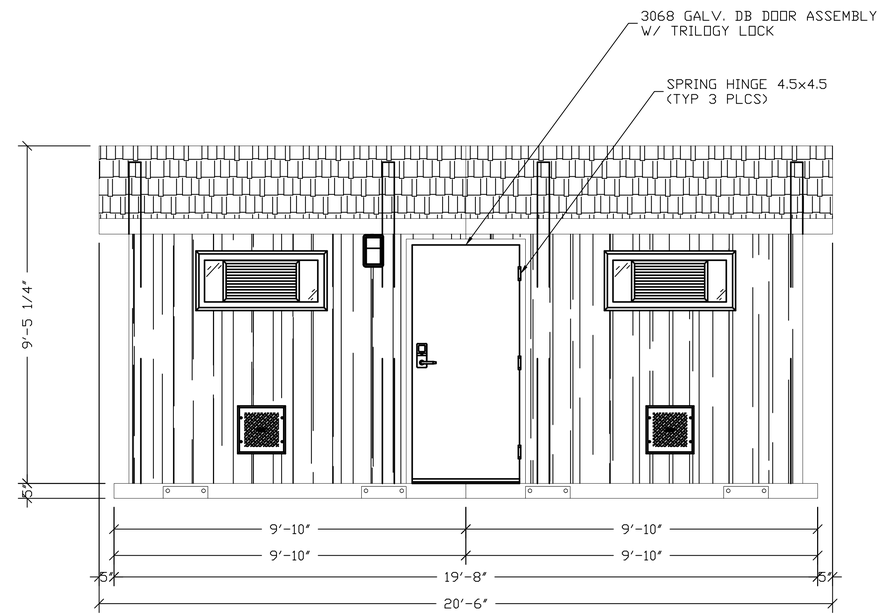

RH SIDE ELEVATION

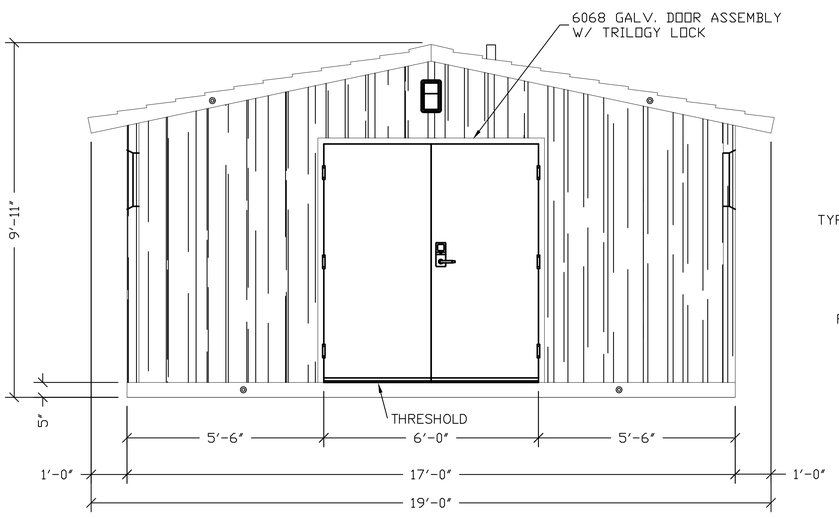

REAR ELEVATION

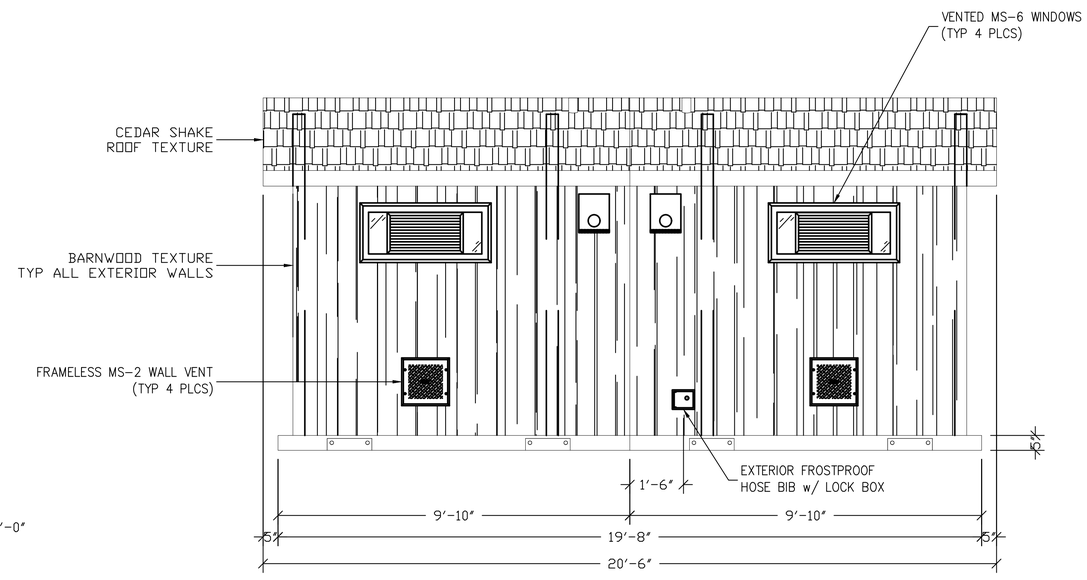

LH SIDE ELEVATION

EMBEDDED MATERIALS	
ITEM	QTY
3068 DOOR ASSEMBLY	3
SPRING HINGE 4.5x4.5	15
CALIFORNIA ADA SIGN	2
ADA DRINKING FOUNTAIN	1
FROST-PROOF HOSE BIB	1
6068 DOOR ASSEMBLY	1
SI-2	2
RM31215 SECUITY LOUVER	2

CU. FT. CONC.	SQ. FT. W.W.F.
APPROXIMATE WEIGHT	

CXT INCORPORATED CONTROLLED COPY
IF THIS STATEMENT IS NOT PRINTED IN RED, DOCUMENT MAY NOT BE CURRENT
ISSUED FOR PRODUCTION BY:Robert D. Walker

3808 N. Sullivan Bldg. #7 Spokane, WA 99216

CXT Precast Products

901 N. Highway 77 Hillsboro, TX 76645

PROJECT TITLE
CORTEZ SECTIONAL
BUILDING NUMBER CRS-016

NOTICE

The information contained herein is proprietary and the exclusive property of CXT Incorporated. The information may only be used by the original recipient for the purpose intended. Reproduction or distribution of this information is strictly prohibited without the prior written consent of CXT Incorporated. By allowing use of this information, CXT Incorporated grants no warranty, express or implied, including a warranty of merchantability or of fitness for a particular purpose.

CXT Incorporated

REV.	DESCRIPTION	APPROVAL	DATE
SCALE	1/4"=1'-0"	DATE	06-22-16
DRAWN	ROB D WALKER	FILE NO.	CRS-016
CHECKED	RDW	PLOT	48

BUILDING ELEVATIONS

DWG NO.	SHEET	REV.
CRS-04	4 / 28	

REVISIONS:

DATE:	DESCRIPTION:	BY:

WCCSP TRI-VALLEY TRAIL CONSTRUCTION PLANS

RESTROOM CONSTRUCTION DETAILS

SEAL:

WALTER J. HOEY, III REGISTERED NO. 11204 DELAWARE PROFESSIONAL ENGINEER

CIVIL ENGINEER:

CENTURY ENGINEERING
CONSULTING ENGINEERS, SURVEYORS
4134 N. DUPONT HWY.
DOVER, DELAWARE 19901

CEI CONTRACT NO.: 125002.17

DELAWARE DEPARTMENT OF NATURAL RESOURCES AND ENVIRONMENTAL CONTROL

DESIGNED BY: WJH

DRAWN BY: DLD

CHECKED BY: SLR

DATE: NOVEMBER 14, 2016

SCALE: 1" = 40'

SHEET NO.: C8.3

CONTRACT NO.: 2016-WCCSP-100

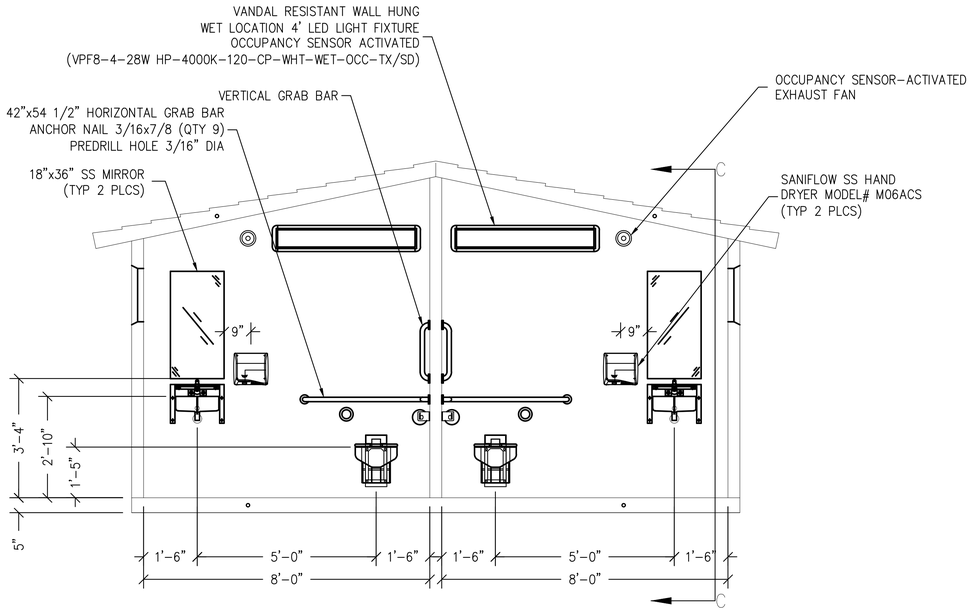

SECTION A – A

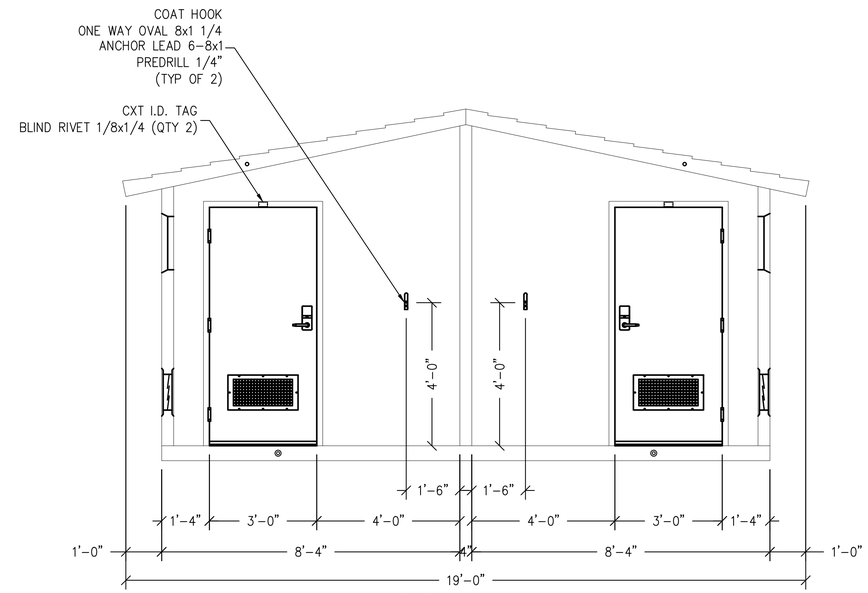

SECTION B – B

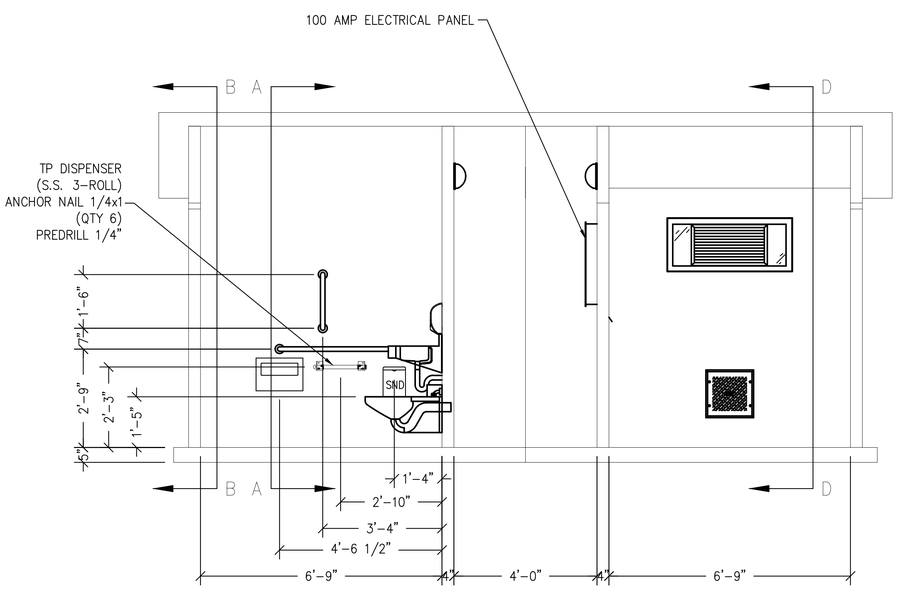

SECTION C – C

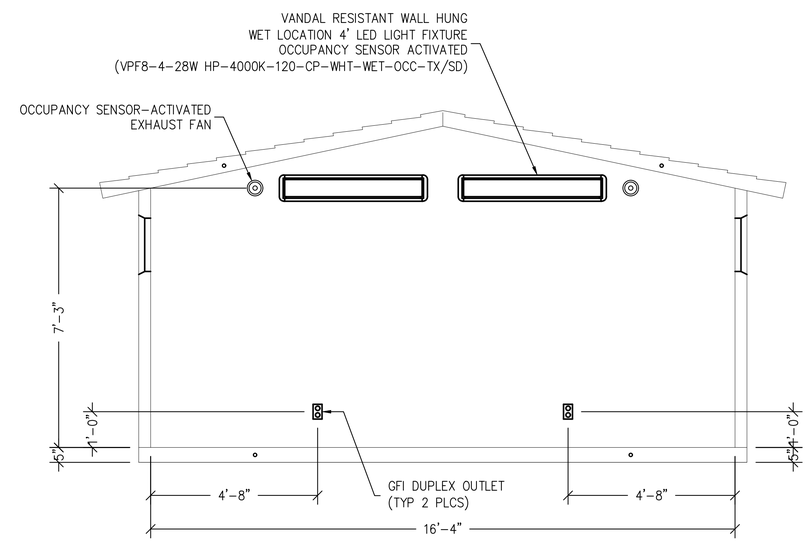

SECTION D – D

EMBEDDED MATERIALS	
ITEM	QTY
BLIND RIVET 1/8x1/4	4
GRAB BAR	2
TP DISPENSER	2
TOILET PAPER ROLL	6
COAT HOOK	2
DOOR STOP	2
ONE WAY OVAL 8x1 1/4	4
ANCHOR LEAD 6-8x1	4
CXT I.D. TAG	2
ANCHOR NAIL 1/4x1	12
ANCHOR NAIL 1/4x3/4	8
ANCHOR NAIL 3/16x7/8	30
VERT GRAB BAR	2
SND	2
TOILET SEAT COVER DISPENSER	2

CU. FT. CONC.	SQ. FT. W.W.F.
APPROXIMATE WEIGHT	

CXT INCORPORATED
CONTROLLED COPY
IF THIS STATEMENT IS NOT PRINTED
IN RED, DOCUMENT MAY NOT BE CURRENT
ISSUED FOR PRODUCTION BY: Robert D. Walker

3808 N. Sullivan Bldg. #7 Spokane, WA 99216
CXT Precast Products
901 N. Highway 77 Hillsboro, TX 76645

PROJECT TITLE
CORTEZ SECTIONAL
BUILDING NUMBER CRS-016

NOTICE

The information contained herein is proprietary and the exclusive property of CXT Incorporated. The information may only be used by the original recipient for the purpose intended. Reproduction or distribution of this information is strictly prohibited without the prior written consent of CXT Incorporated. By allowing use of this information, CXT Incorporated grants no warranty, express or implied, including a warranty of merchantability or of fitness for a particular purpose.
CXT Incorporated

REV.	DESCRIPTION	APPROVAL	DATE

SCALE	1/2"=1'-0"	DATE	06-22-16
DRAWN	ROB D WALKER	FILE NO.	CRS-016
CHECKED	RDW	PLOT	48

BUILDING INTERIOR
ELEVATIONS

DWG NO. CRS-05 | SHEET 5 / 28 | REV.

REVISIONS:
DATE: DESCRIPTION: BY:

WCCSP TRI-VALLEY TRAIL
CONSTRUCTION PLANS

RESTROOM CONSTRUCTION DETAILS

SEAL:
WALTER J. HOEY, II
REGISTERED
NO. 11204
DELAWARE
PROFESSIONAL ENGINEER

CIVIL ENGINEER:
CENTURY ENGINEERING
CONSULTING ENGINEERS, SURVEYORS
4134 N. DUPONT HWY.
DOVER, DELAWARE 19901
CEI CONTRACT NO.: 125002.17

DELAWARE DEPARTMENT OF NATURAL RESOURCES AND ENVIRONMENTAL CONTROL

DESIGNED BY: WJH
DRAWN BY: DLD
CHECKED BY: SLR
DATE: NOVEMBER 14, 2016
SCALE:
SHEET NO.: C8.4
CONTRACT NO.: 2016-WCCSP-100

O:\PROJECTS\125002.00 (DNREC Civil Engineering Services - 2012)\125002.02_Tri-Valley Trail Concept Plan\CADD FILES\Sheets\FinalConstructionSet\04-4_RestroomConstructionDetails.dwg, 11/14/2016 5:03 PM

NOTE:

THIS FACTORY ASSEMBLED BUILDING AS CONSTRUCTED PROVIDES A RIGID BOX TYPE STRUCTURAL SYSTEM. VERTICAL LOADS ARE TRANSFERRED PRIMARILY THROUGH BEARING WALLS TO A PREPARED GRANULAR SUB-BASE WHICH DISSIPATES VERTICAL LOADS UNIFORMLY TO THE NATIVE SUBGRADE AND ALSO ACTS AS A FROST BARRIER. DUE TO THE INHERENT STIFFNESS OF THE BUILDING, IT WILL REMAIN SAFE AND STRUCTURALLY SOUND IN THE UNLIKELY EVENT OF FREEZING ACTION BELOW THE BUILDING.

LATERAL LOADS ARE TRANSFERRED TO THE GROUND THROUGH FRICTIONAL RESISTANCE WITHOUT SLIDING OR SHIFTING BETWEEN THE BUILDING FLOOR SLAB AND THE PREPARED SOIL AND GRAVEL SUB-BASE ON WHICH THE BUILDING RESTS. SEISMIC ANALYSES ARE BASED ON LOADS DETERMINED IN ACCORDANCE WITH THE 2013 CALIFORNIA BUILDING STANDARDS CODE USING PARAMETERS WHICH MEET OR EXCEED THE CODE PRESCRIBED REQUIREMENTS FOR THIS INSTALLATION.

THIS BUILDING, AS DESIGNED, RESTING ON A PROPERLY PREPARED GRANULAR SUB-BASE WILL BE SAFE AND STRUCTURALLY SOUND FOR VERTICAL AND LATERAL LOADS AS DISCUSSED ABOVE. A FULL DEPTH FOUNDATION WALL AT THE BUILDING PERIMETER, TYPICAL FOR OTHER TYPES OF BUILDING CONSTRUCTION, IS NOT REQUIRED FOR THIS BUILDING.

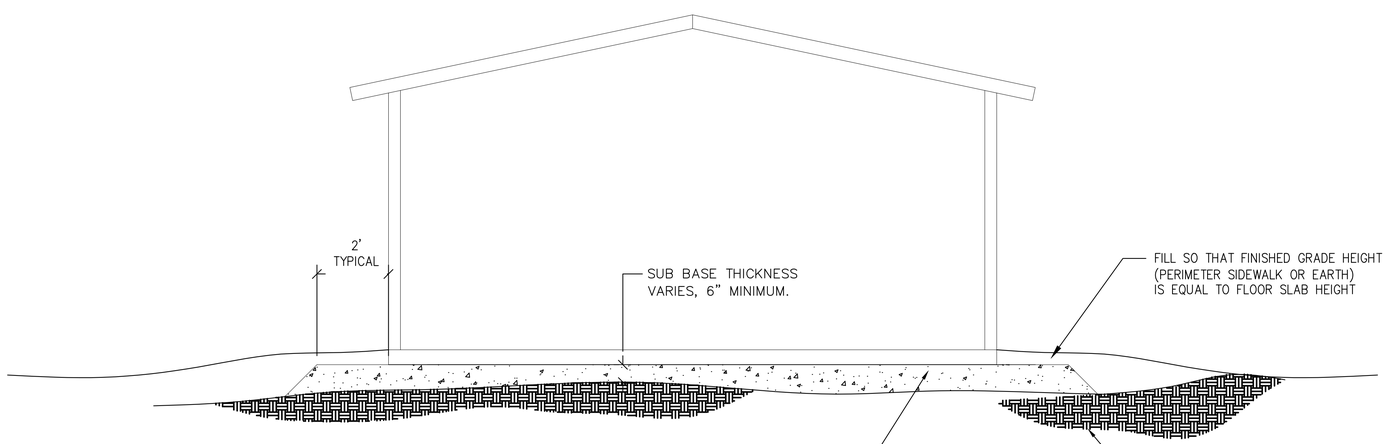

PRIOR TO PLACEMENT OF BUILDING A PROPERLY PREPARED SUB-BASE SHALL BE PROVIDED. SUB-BASE SHALL BE A MINIMUM OF 6" THICK AND CONSIST OF ¾" MINUS CRUSHED ROCK (ROAD BASE MATERIAL) COMPACTED TO 95% OF OPTIMUM DENSITY IN ACCORDANCE WITH ASTM D 1557. FINISHED SURFACE OF SUB-BASE SHALL BE FLAT AND LEVEL, WITH A MAXIMUM DEVIATION OF −½", +0" FROM A TRUE HORIZONTAL PLANE. REFER TO BUILDING HANDLING SHEET FOR SUB-BASE REQUIREMENTS DURING BUILDING PLACEMENT. (PREPARED SUB-BASE NOT BY CXT).

CXT INCORPORATED
CONTROLLED COPY
IF THIS STATEMENT IS NOT PRINTED
IN RED, DOCUMENT MAY NOT BE CURRENT
ISSUED FOR PRODUCTION BY: Robert D. Walker

3808 N. Sullivan Bldg. #7 Spokane, WA 99216

CXT
Precast Products

901 N. Highway 77 Hillsboro, TX 76645

PROJECT TITLE
CORTEZ SECTIONAL
BUILDING NUMBER CRS-016

NOTICE

The information contained herein is proprietary and the exclusive property of CXT Incorporated. The information may only be used by the original recipient for the purpose intended. Reproduction or distribution of this information is strictly prohibited without the prior written consent of CXT Incorporated. By allowing use of this information, CXT Incorporated grants no warranty, express or implied, including a warranty of merchantability or of fitness for a particular purpose.

CXT Incorporated

REV.	DESCRIPTION	APPROVAL	DATE

SCALE	1/2"=1'-0"	DATE	06-22-16
DRAWN	ROB D WALKER	FILE NO.	CRS-016
CHECKED	RDW	PLOT	48

FOUNDATION DETAIL

DWG NO.	SHEET	REV.
CRS-22	22 / 28	

REVISIONS:

DATE:	DESCRIPTION:	BY:

WCCSP TRI-VALLEY TRAIL
CONSTRUCTION PLANS

RESTROOM CONSTRUCTION DETAILS

SEAL:

CIVIL ENGINEER:

CENTURY ENGINEERING
CONSULTING ENGINEERS, SURVEYORS
4134 N. DUPONT HWY.
DOVER, DELAWARE 19901

CEI CONTRACT NO.: 125002.17

DELAWARE DEPARTMENT OF NATURAL RESOURCES AND ENVIRONMENTAL CONTROL

DESIGNED BY: WJH

DRAWN BY: DLD

CHECKED BY: SLR

DATE: NOVEMBER 14, 2016

SCALE:

SHEET NO.: C8.5

CONTRACT NO.: 2016-WCCSP-100

G:\PROJECTS\125002.DE (DNREC Civil Engineering Services - 2017)\125002.02_Tri-Valley Trail Concept Plan\CADD FILES\Sheets\FinalConstructionSet\C8-5_RestroomConstructionDetails.dwg, 11/14/2016 5:03 PM

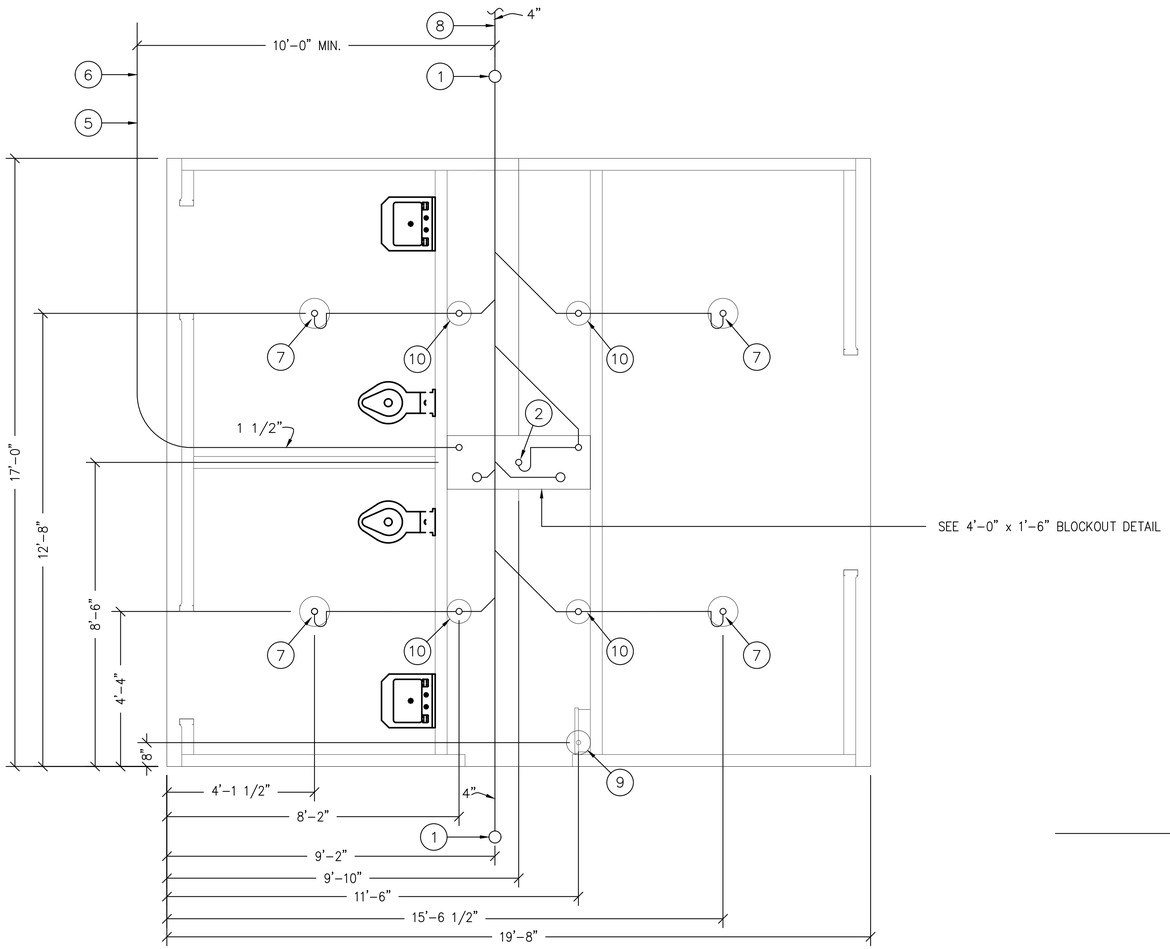

FLOOR DRAIN BLOCKOUTS & BELOW FLOOR PIPING

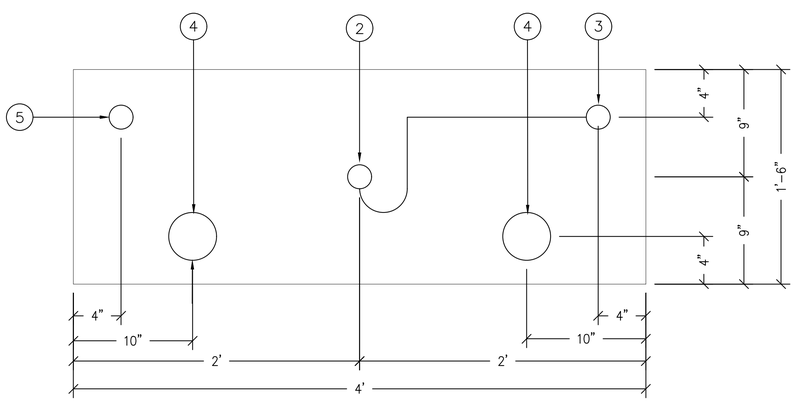

4'-0" x 1'-6" BLOCKOUT DETAIL

ALL PIPING INDICATED ON THIS SHEET IS NOT BY CXT

BELOW FLOOR PIPING – KEY NOTES

1. 4" CLEAN OUT TO GRADE.
2. 2" FLOOR DRAIN. FIELD INSTALLED TRAP PRIMER SYSTEM IF REQUIRED BY AUTHORITY HAVING JURISDICTION. (4'-0" x 1'-6" BLOCKOUT)
3. 2" VENT PIPES EXTENDED 12" ABOVE FINISHED FLOOR LEVEL, PROVIDE TEST PLUG. (4'-0" x 1'-6" BLOCKOUT)
4. 3" WASTE PIPE EXTENDED 12" ABOVE FINISHED FLOOR LEVEL, PROVIDE TEST PLUG. (4'-0" x 1'-6" BLOCKOUT)
5. 1 1/2" TYPE K ANNEALED "SOFT" COPPER WATER SERVICE EXTENDED 12" ABOVE FINISHED FLOOR LEVEL, PROVIDE CAP AT END. (4'-0" x 1'-6" BLOCKOUT)
6. MIN. BURY PER LOCAL REQUIREMENTS TO PROTECT 2" FLOOR DRAIN. FIELD INSTALLED TRAP PRIMER SYSTEM IF REQUIRED BY AUTHORITY HAVING JURISDICTION. (10" DIA BLOCKOUT)
7. 2" FLOOR DRAIN. FIELD INSTALLED TRAP PRIMER SYSTEM IF REQUIRED BY AUTHORITY HAVING JURISDICTION. BACKWATER VALVES ON DRAINS (NOT BY CXT) (10" DIA BLOCKOUT)
8. 30" MIN. BURY, PROVIDE TRACER TAPE.
9. ELECTRICAL STUB UP, (8" DIA BLOCKOUT)
10. 2" VENT PIPES EXTENDED 12" ABOVE FINISHED FLOOR LEVEL, PROVIDE TEST PLUG. (8" DIA BLOCKOUT)

PIPING LEGEND

BELOW FLOOR WASTE PIPING SCH 40 ABS TYPE DWV	BELOW FLOOR VENT PIPING SCH 40 ABS TYPE DWV	2" TYPE "K" ANNEALED "SOFT" COPPER WATER SERVICE

FLOOR DRAIN DETAIL NOTES

A. CAST-IN DRAIN HOUSING (10" INSIDE DIM – PROVIDED BY CXT)
B. FIELD INSTALLED GROUT, SLOPE TO DRAIN (CXT PROVIDED-INSTALLATION NOT BY CXT)
C. 2" WASTE PIPE – STUB UP 12" ABOVE GRADE (NOT BY CXT)
D. TAPPED P-TRAP ADAPTER (NOT BY CXT)
E. P-TRAP ASSEMBLY (NOT BY CXT)
F. 1/2" O.D. COPPER TRAP PRIMER LINE (NOT BY CXT)
G. 2" FLOOR DRAIN VENT RISER – STUB UP 12" ABOVE GRADE (NOT BY CXT)
H. TRAP PRIMER MANIFOLD (PRE-PLUMBED AND INSTALLED BY CXT)
I. 1/2" SHUT OFF VALVE (PRE-PLUMBED AND INSTALLED BY CXT)

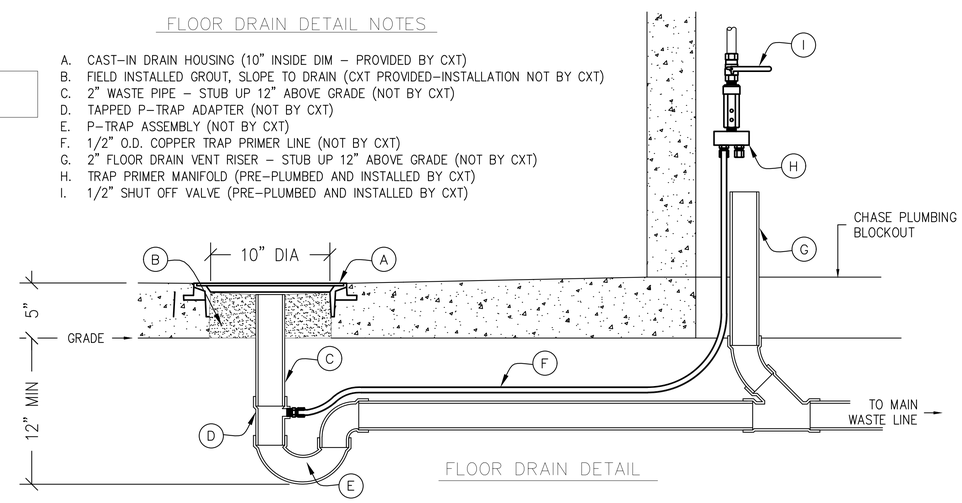

FLOOR DRAIN DETAIL

CXT INCORPORATED CONTROLLED COPY
IF THIS STATEMENT IS NOT PRINTED IN RED, DOCUMENT MAY NOT BE CURRENT
ISSUED FOR PRODUCTION BY: Robert D. Walker

3808 N. Sullivan Bldg. #7 Spokane, WA 99216
CXT Precast Products
901 N. Highway 77 Hillsboro, TX 76645

PROJECT TITLE
CORTEZ SECTIONAL
BUILDING NUMBER CRS-016

NOTICE

The information contained herein is proprietary and the exclusive property of CXT Incorporated. The information may only be used by the original recipient for the purpose intended. Reproduction or distribution of this information is strictly prohibited without the prior written consent of CXT Incorporated. By allowing use of this information, CXT Incorporated grants no warranty, express or implied, including a warranty of merchantability or of fitness for a particular purpose.

CXT Incorporated

REV.	DESCRIPTION	APPROVAL	DATE

SCALE	1/2"=1'-0"	DATE	06-22-16
DRAWN	ROB D WALKER	FILE NO.	CRS-016
CHECKED	RDW	PLOT	48

FIELD STUB UP LOCATIONS

DWG NO.	SHEET	REV.
CRS-23	23 / 28	

REVISIONS:

DATE:	DESCRIPTION:	BY:

WCCSP TRI-VALLEY TRAIL CONSTRUCTION PLANS

RESTROOM CONSTRUCTION DETAILS

SEAL:

CIVIL ENGINEER:
CENTURY ENGINEERING
CONSULTING ENGINEERS, SURVEYORS
4134 N. DUPONT HWY.
DOVER, DELAWARE 19901
CEI CONTRACT NO.: 125002.17

DELAWARE DEPARTMENT OF NATURAL RESOURCES AND ENVIRONMENTAL CONTROL

DESIGNED BY: WJH

DRAWN BY: DLD

CHECKED BY: SLR

DATE: NOVEMBER 14, 2016

SCALE:

SHEET NO.: C8.6

CONTRACT NO.: 2016-WCCSP-100

O:\PROJECTS\125002.00 (DMEC Civil Engineering Services - 2012)\125002.02_Tri-Valley Trail Concept Plan\CADD FILES\Sheets\FinalConstructionDetails.dwg, 11/14/2016 5:03 PM