DNREC Division of Watershed Stewardship
285 Beiser Boulevard, Suite 102
Dover, DE 19904
(302) 739-9921

APPLICATION FOR STANDARD PLAN APPROVAL

RESIDENTIAL CONSTRUCTION ≥ 1.0 Acre Disturbed

Definitions

1. "Forest" means a biological community dominated by trees and other woody plants covering a land area of one contiguous acre or greater, and that have at least 100 trees per acre with at least 50% of those trees having a 2 inch or greater diameter at 4.5 feet above the ground and larger. Forest does not include orchards or other stands of trees having a curve number equivalent to "woods-grass combination". To determine whether a site meets the definition of a forest at baseline condition of 2017, the Department or its authorized Delegated Agency may use data from various sources, including but not limited to Land Use/Land Cover data, historic and recent aerial photography, field collected data, etc.
2. "Residential Construction" means single family residence and auxiliary structures such as detached garages, sheds, pole barns, accessory dwelling units, and other structures that create additional imperviousness.

Applicability Criteria

1. The proposed construction is for residential construction that does not create common lands, common open space, or a public street.
2. The total land disturbance will not exceed 5.0 acres on any individual lot within the proposed project.
3. One of the following will be met on any individual lot:
    a. Clearing of forest areas will not exceed 1.0 acre, or
    b. Equivalent forest area will be retained on the parcel for the portion of the forest clearing that exceeds 1.0 acre.

Site Information

Site Location (911 Address or road name with distance to nearest intersection):_____

_____

Tax Parcel ID:_____ Disturbed Acres (nearest 0.1ac):_____

Parcel Total Acres (nearest 0.1ac):_____ Proposed Impervious Area (square feet):_____

Forested area to be cleared:_____

Applicant Information

Owner:_____ Builder:_____

Mailing Address:_____ Mailing Address:_____

_____ _____

Owner Phone:_____ Builder Phone:_____

Owner Email:_____ Builder Email:_____

Fees

The review fee is $80 per disturbed acre to the nearest 0.1 acre. Make checks payable to Division of Watershed Stewardship.

Approval Information (for office use only)

Approval #_____ **Fee Paid: $**_____

Approved by:_____ **Approval Date:**_____

Title:_____ **Expiration Date:**_____

Effective February 2019

Standard Conditions

1. Standard nutrient management plan recommendations will be followed for the project, during construction and throughout the life of the project.
    a. Application of lawn nutrients will be based upon the recommendations of a soil test.
    b. Nutrients will be applied only to turf areas, not impervious surfaces.
    c. Nutrients will not be applied directly before a runoff event.
2. Discharges from rooftops will be disconnected using a method approved by the Department or Delegated Agency. For example:
    a. Individual downspouts that discharge to lawn, landscape area, or preserved open space or forested area.
    b. Discharges from downspouts can be collected in rain barrels or cisterns for reuse.
3. Driveways, sidewalks, patios, and other impervious surfaces will be graded to sheet flow to lawn or other pervious areas to the maximum extent practicable.
4. Construction site stormwater management best management practices will be used. Standard Detail and Specification DE-ESC-3.7.1 ESC For Minor Development will be followed (see attachment).
5. Construction projects exceeding 1.0 acre of total disturbance require submittal of a Notice of Intent (NOI) for Stormwater Discharges Associated with Construction Activity. A plan fulfilling Stormwater Pollution Prevention Plan (SWPPP) requirements must be developed to obtain general permit coverage for Stormwater Discharges Associated with Construction Activity (see attachment).
6. Approval of this Standard Plan does not relieve the applicant from complying with any and all federal, state, county or municipal laws and regulations.

Stabilization Conditions

1. Following initial soil disturbance or redisturbance, temporary or permanent stabilization with seed and mulch shall be completed within 14 calendar days to the surface of all disturbed areas not actively under construction.
2. Specific stabilization recommendations may be found in the Delaware Erosion and Sediment Control Handbook, 3.4.3 Standard and Specifications for Vegetative Stabilization.

Applicant Certification

I, the undersigned, certify that the information supplied on this Application for Standard Plan Approval is accurate, the proposed land disturbing activity meets the criteria established, and all conditions of this Standard Plan Approval will be met by the applicant, builder, contractor, and owner during construction and post construction.

Applicant Signature:_____ Date:_____

Applicant Printed Name:_____ Title:_____

*****THIS STANDARD PLAN APPLICATION FORM MUST BE MAINTAINED ON THE SITE AT ALL TIMES DURING CONSTRUCTION*****

Standard Detail & Specifications

ESC for Minor Development

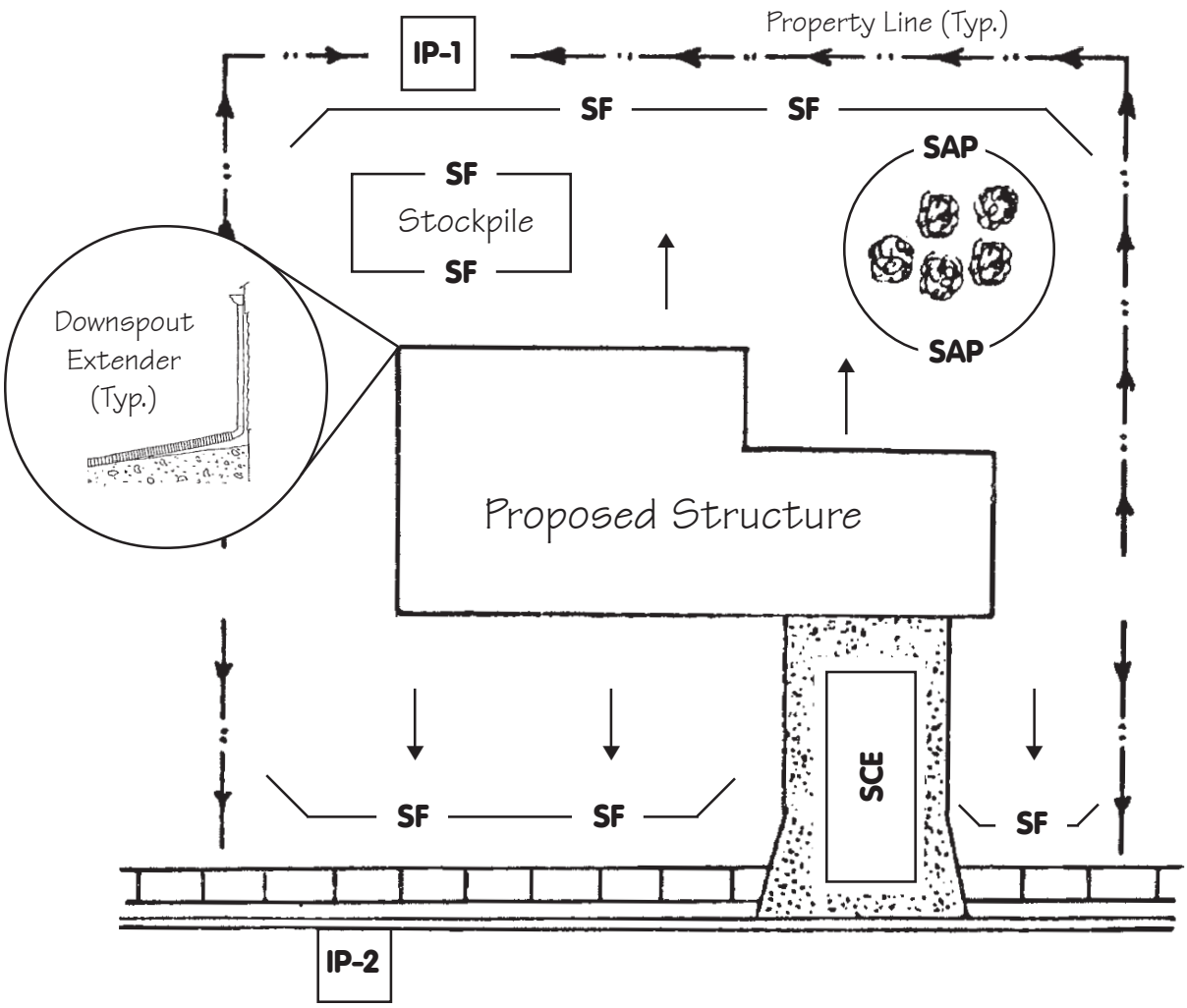

LEGEND

Flow	→	Inlet protection - Type 1	IP-1
Silt Fence	SF		
Sensitive Area Protection	SAP		
Stabilized Construction Entrance	SCE	Inlet Protection - Type 2	IP-2

Source:	Symbol:	Detail No.
Adapted from IN DNR, "Erosion Control for the Home Builder"		**DE-ESC-3.7.1** Sheet 1 of 2

Effective February 2019

ESC for Minor Development

Construction Notes:

1. Evaluate the Site.
   a. Identify Vegetation To Be Saved
   b. Protect Trees and Sensitive Areas
2. Install Perimeter Erosion And Sediment Controls.
   a. Protect down-slope areas with vegetative filter strips.
   b. Protect down-slope areas with silt fence.
   c. Restrict all lot access to stabilized construction entrance to prevent vehicles from tracking mud onto roadways.
   d. Install inlet protection on nearby storm drain inlets.
3. Prepare the Site for Construction.
4. Salvage and Stockpile the Topsoil/Subsoil
5. Build the Structure(s) and Install the Utilities.
6. Install Downspout Extenders
7. Maintain the Control Practices.
   a. Maintain all erosion and sediment control practices until construction is completed and the lot is stabilized.
   b. Inspect the control practices a minimum of twice a week and after each storm event, making any needed repairs immediately.
8. Revegetate the Building Site.
   a. Redistribute the stockpiled subsoil and topsoil.
   b. Seed or sod bare areas.
   c. Mulch newly seeded areas.
9. Remove Remaining Temporary Control Measures.

Source:	Symbol:	Detail No.
Adapted from IN DNR, "Erosion Control for the Home Builder"		**DE-ESC-3.7.1** Sheet 2 of 2

Standard Detail & Specifications

Construction Site Waste Mgt & Spill Control

DATA TO BE PROVIDED

Volume of Potential Pollution
Height of containment
Area of containment
Volume of containment

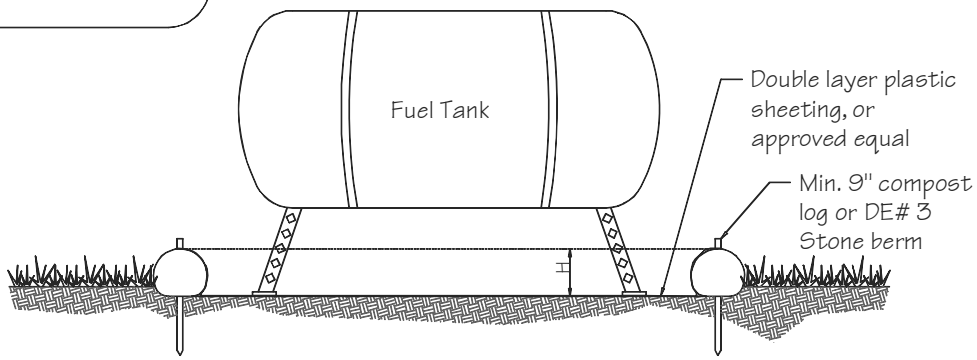

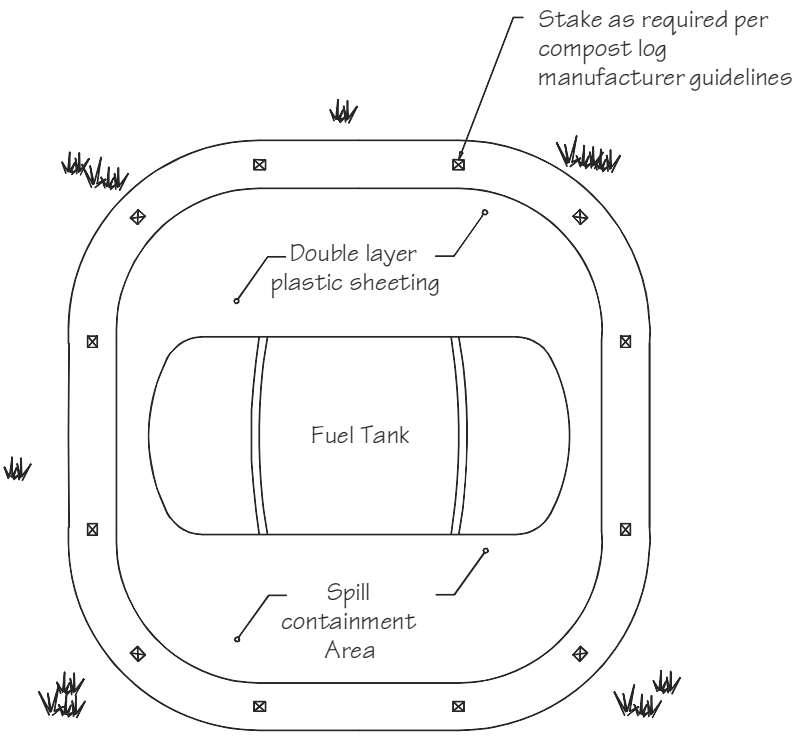

Source:	Symbol:	Detail No.
Delaware ESC Handbook		**DE-ESC-3.6.1** Sheet 1 of 5

Effective February 2019

Construction Site Waste Mgt & Spill Control

Pollution Prevention – Spill Prevention

1. Fueling should only take place in signed designated areas, away from downstream drainage facilities and watercourses.
2. Fueling must be with nozzles equipped with automatic shut-off to control drips. Do not top off.
3. Protect the areas where equipment or vehicles are being repaired, maintained, fueled or parked from storm water run-on and runoff.
4. Use barriers such as berms to prevent storm water run-on and runoff, and to contain spills.
5. Place a "Fueling Area" sign next to each fueling area.
6. Store hazardous materials such as fuel, solvents, oil and chemicals in secondary containment.
7. Inspect vehicles and equipment for leaks on each day of use. Repair fluid and oil leaks immediately.
8. Absorbent spill clean-up materials and spill kits must be available in fueling areas and on fuel trucks.
9. If fueling is to take place at night, make sure the fueling area is sufficiently illuminated.
10. Properly dispose of used oil, fluids, lubricants and spill clean-up materials.

CLEAN UP SPILLS

1. If it is safe to do so, immediately contain and clean up any chemical and/or hazardous material spills.
2. Properly dispose of used oil, fluids, lubricants and spill clean-up materials.
3. Do not bury spills or wash them down with water.

LEAKS AND DRIPS

1. Use drip pans or absorbent pads at all times. Place under and around leaky equipment.
2. Do not allow oil, grease, fuel or chemicals to drip onto the ground.
3. Have spill kits and clean up material on-site.
4. Repair leaky equipment promptly or remove problem vehicles and equipment from the site. Clean up contaminated soil immediately.
5. Store contaminated waste in sealed containers constructed of suitable material. Label these containers properly.
6. Clean up all spills and leaks. Promptly dispose of waste and spent clean up materials.

Source:	Symbol:	Detail No.
Delaware ESC Handbook		**DE-ESC-3.6.1** Sheet 2 of 5

Construction Site Waste Mgt & Spill Control

Notes:

The Construction Site Pollution Prevention Plan should include the following elements:

1. Material Inventory

Document the storage and use of the following materials:

a. Concrete
b. Detergents
c. Paints (enamel and latex)
d. Cleaning solvents
e. Pesticides
f. Wood scraps
g. Fertilizers
h. Petroleum based products

2. Good housekeeping practices

a. Store only enough product required to do the job.

b. All materials shall be stored in a neat, orderly manner in their original labeled containers and covered.

c. Substances shall not be mixed.

d. When possible, all of a product shall be used up prior to disposal of the container.

e. Manufacturers' instructions for disposal shall be strictly adhered to.

f. The site foreman shall designate someone to inspect all BMPs daily.

3. Waste management practices

a. All waste materials shall be collected and stored in securely lidded dumpsters in a location that does not drain to a waterbody.

b. Waste materials shall be salvaged and/or recycled whenever possible.

c. The dumpsters shall be emptied a minimum of twice per week, or more if necessary. The licensed trash hauler is responsible for cleaning out dumpsters.

Source:	Symbol:	Detail No.
Adapted from USEPA Pub. 840-B-92-002		**DE-ESC-3.6.1** Sheet 3 of 5

Construction Site Waste Mgt & Spill Control

Notes (cont.)

d. Trash shall be disposed of in accordance with all applicable Delaware laws.

e. Trash cans shall be placed at all lunch spots and littering is strictly prohibited. Recycle bins shall be placed near the construction trailer.

f. If fertilizer bags can not be stored in a weather-proof location, they shall be kept on a pallet and covered with plastic sheeting which is overlapped and anchored.

4. Equipment maintenance practices

a. If possible, equipment should be taken to off-site commercial facilities for washing and maintenance.

b. If performed on-site, vehicles shall be washed with high-pressure water spray without detergents in an area contained by an impervious berm.

c. Drip pans shall be used for all equipment maintenance.

d. Equipment shall be inspected for leaks on a daily basis.

e. Washout from concrete trucks shall be disposed of in a temporary pit for hardening and proper disposal.

f. Fuel nozzles shall be equipped with automatic shut-off valves.

g. All used products such as oil, antifreeze, solvents and tires shall be disposed of in accordance with manufacturers' recommendations and local, state and federal laws and regulations.

5. Spill prevention practices

a. Potential spill areas shall be identified and contained in covered areas with no connection to the storm drain system.

b. Warning signs shall be posted in hazardous material storage areas.

c. Preventive maintenance shall be performed on all tanks, valves, pumps, pipes and other equipment as necessary.

d. Low or non-toxic substances shall be prioritized for use.

Construction Site Waste Mgt & Spill Control

Notes (cont.)

e. Contact information for reporting spills through the DNREC 24-Hour Toll Free Number shall be prominently posted.

6. Education

a. Best management practices for construction site pollution control shall be a part of regular progress meetings.

b. Information regarding waste management, equipment maintenance and spill prevention shall be prominently posted in the construction trailer.

CONTACT INFORMATION

DNREC 24-Hour Toll Free Number	**800-662-8802**
DNREC Solid & Hazardous Waste Branch	**302-739-9403**

Source:	Symbol:	Detail No.
Adapted from USEPA Pub. 840-B-92-002		**DE-ESC-3.6.1** Sheet 5 of 5