DNREC Division of Watershed Stewardship
285 Beiser Boulevard, Suite 102
Dover, DE 19904
(302) 739-9921

APPLICATION FOR STANDARD PLAN APPROVAL

POULTRY HOUSE CONSTRUCTION

Applicability Criteria

1. Construction is for one or more poultry houses and associated structures including generator and pump structures, composter structures and manure storage structures. Other agricultural structures shall comply with the Standard Plan for Agricultural Structure Construction.
2. Poultry house layout, including the general dimensions of structures, roadways and loading areas, as well as spacing between structures will adhere to Department or Delegated Agency guidance for this Standard Plan.

Site Information

Site Location (911 Address or road name with distance to nearest intersection):_____

_____

Tax Parcel ID:_____

Parcel Total Acres (nearest 0.1ac):_____

Disturbed Acres (nearest 0.1ac):_____

Proposed Impervious Area (square feet):_____

Forested area to be cleared:_____

Applicant Information

Owner:_____

Mailing Address:_____

_____

Owner Phone:_____

Owner Email:_____

Builder:_____

Mailing Address:_____

_____

Builder Phone:_____

Builder Email:_____

Fees

The review fee is $80 per disturbed acre to the nearest 0.1 acre. Make checks payable to Division of Watershed Stewardship.

Approval Information (for office use only)

Approval #_____ **Fee Paid: $**_____

Approved by:_____ **Approval Date:**_____

Title:_____ **Expiration Date:**_____

Effective February 2019

Standard Conditions

1. Nutrient management plan recommendations will be followed for the project, during construction and throughout the life of the project. To the maximum extent practicable, runoff from impervious surfaces including roof, roadways, and loading areas will be conveyed to an ephemeral wetland forebay. Ephemeral wetland forebay volume calculations based on Department or Delegated Agency guidance for this Standard Plan will be submitted.
2. A detention basin will be provided to manage the runoff from the Conveyance (Cv) and Flooding (Fv) events. For poultry houses constructed where there is no forest clearing, the volume of the detention basin may be included in the ephemeral wetland forebay to make one detention structure. Detention basin volume calculations based on Department or Delegated Agency guidance for this Standard Plan will be submitted.
3. Vegetated stabilization will be completed in accordance with Department or Delegated Agency guidance for this Standard Plan.
4. Construction projects exceeding 1.0 acre of total disturbance require submittal of a Notice of Intent (NOI) for Stormwater Discharges Associated with Construction Activity. A plan fulfilling Stormwater Pollution Prevention Plan (SWPPP) requirements must be developed to obtain general permit coverage for Stormwater Discharges Associated with Construction Activity (see attachment).
5. Approval of this Standard Plan does not relieve the applicant from complying with any and all federal, state, county or municipal laws and regulations.

Stabilization Conditions

1. Following initial soil disturbance or redisturbance, temporary or permanent stabilization with seed and mulch shall be completed within 14 calendar days to the surface of all disturbed areas not actively under construction.
2. Specific stabilization recommendations may be found in the Delaware Erosion and Sediment Control Handbook, 3.4.3 Standard and Specifications for Vegetative Stabilization.

Applicant Certification

I, the undersigned, certify that the information supplied on this Application for Standard Plan Approval is accurate, the proposed land disturbing activity meets the criteria established, and all conditions of this Standard Plan Approval will be met by the applicant, builder, contractor, and owner during construction and post construction.

Applicant Signature:_____ Date:_____

Applicant Printed Name:_____ Title:_____

*****THIS STANDARD PLAN APPLICATION FORM MUST BE MAINTAINED ON THE SITE AT ALL TIMES DURING CONSTRUCTION*****

The plan fulfilling SWPPP requirements will include the following:

- ◻ A north arrow
- ◻ Parcel information, including the following:
  - ◻ Site address or location
  - ◻ Tax parcel ID
  - ◻ Parcel size in acres
  - ◻ Wetland delineation line, if applicable
  - ◻ Floodplain line, if applicable
  - ◻ Tax ditch rights-of-way, if applicable
  - ◻ Building setback line
  - ◻ NRCS description of site soils
- ◻ Project information, including the following:
  - ◻ Estimated disturbed area
  - ◻ Site discharge location and receiving waters
  - ◻ Estimated construction start and completion dates
  - ◻ Proposed grading
  - ◻ Construction sequence, including notification, pre-construction meeting, construction of perimeter controls, construction of forebay and detention basin, vegetative stabilization and submittal of Notice of Termination.
  - ◻ Construction site stormwater BMP standard details, including construction site waste management and spill control and concrete washout
  - ◻ Vegetated stabilization requirements
  - ◻ General construction notes
- ◻ Owner contact information
- ◻ Signed owner certification, including certification that a responsible person (Blue Card Holder) shall implement the Plan fully through daily oversight of the construction while land disturbing activity is taking place
- ◻ Signature and seal of licensed design professional
- ◻ Plan view of project at a maximum scale of 1”=50’ to include:
  - ◻ Layout with dimensions of poultry houses and associated structures, roadways, loading areas
  - ◻ A 2-foot wide gravel diaphragm to be constructed along both sides of each individual poultry house to stabilize the dripline from the roof
  - ◻ Conveyance swales having a flat bottom width of 8 feet
  - ◻ Ephemeral wetland forebay with dimensions and elevations. Volume computations may be submitted separately.
  - ◻ If applicable, detention basin with dimensions and elevations. Volume computations may be submitted separately.
- ◻ Cross section through poultry houses, roadways, and conveyance swales between houses.
- ◻ Profile through ephemeral wetland forebay and detention basin including forebay inlet, overflow weir and site discharge location. When the site discharges via a closed pipe, the minimum diameter will be 18 inches. The invert elevations of the discharge pipe will be provided on the plan.

NEW CASTLE COUNTY

STORMWATER STORAGE REQUIREMENTS - HSG A SOILS

	Cropland Disturbance	Forest Disturbance	
Layout	***Forebay/Detention Combo (cf)***	***Forebay (cf)***	***Detention Basin (cf)***
1-House	8500	8350	35875
2-House	17000	16675	71750
3-House	25500	25025	107625
4-House	34000	33350	143500
Per 1000 SF Impervious*	200	205	410

* Area to be captured by Ephemeral Wetland Forebay.

STORMWATER STORAGE REQUIREMENTS - HSG B SOILS

	Cropland Disturbance	Forest Disturbance	
Layout	***Forebay/Detention Combo (cf)***	***Forebay (cf)***	***Detention Basin (cf)***
1-House	7500	9575	21900
2-House	15000	19125	43800
3-House	22500	28700	65700
4-House	30000	38250	87575
Per 1000 SF Impervious*	150	195	220

* Area to be captured by Ephemeral Wetland Forebay.

STORMWATER STORAGE REQUIREMENTS - HSG C SOILS

	Cropland Disturbance	Forest Disturbance	
Layout	***Forebay/Detention Combo (cf)***	***Forebay (cf)***	***Detention Basin (cf)***
1-House	5250	9575	9050
2-House	10500	19125	18075
3-House	15750	28700	27125
4-House	21000	38250	36150
Per 1000 SF Impervious*	120	160	115

* Area to be captured by Ephemeral Wetland Forebay.

STORMWATER STORAGE REQUIREMENTS - HSG D SOILS

	Cropland Disturbance	Forest Disturbance	
Layout	***Forebay/Detention Combo (cf)***	***Forebay (cf)***	***Detention Basin (cf)***
1-House	3875	8775	5250
2-House	7750	17550	10500
3-House	11625	26325	15750
4-House	15500	35075	21000
Per 1000 SF Impervious*	100	135	75

* Area to be captured by Ephemeral Wetland Forebay.

Table 1

Effective February 2019

KENT COUNTY

STORMWATER STORAGE REQUIREMENTS - HSG A SOILS

	Cropland Disturbance	Forest Disturbance	
Layout	***Forebay/Detention Combo (cf)***	***Forebay (cf)***	***Detention Basin (cf)***
1-House	9125	8350	41825
2-House	18250	16675	83650
3-House	27375	25025	125475
4-House	36500	33350	167300
Per 1000 SF Impervious*	200	205	465

* Area to be captured by Ephemeral Wetland Forebay.

STORMWATER STORAGE REQUIREMENTS - HSG B SOILS

	Cropland Disturbance	Forest Disturbance	
Layout	***Forebay/Detention Combo (cf)***	***Forebay (cf)***	***Detention Basin (cf)***
1-House	6500	9575	22850
2-House	13000	19125	45700
3-House	19500	28700	68550
4-House	26000	38250	91400
Per 1000 SF Impervious*	150	195	245

* Area to be captured by Ephemeral Wetland Forebay.

STORMWATER STORAGE REQUIREMENTS - HSG C SOILS

	Cropland Disturbance	Forest Disturbance	
Layout	***Forebay/Detention Combo (cf)***	***Forebay (cf)***	***Detention Basin (cf)***
1-House	5250	9575	9900
2-House	10500	19125	19775
3-House	15750	28700	29675
4-House	21000	38250	39550
Per 1000 SF Impervious*	120	160	125

* Area to be captured by Ephemeral Wetland Forebay.

STORMWATER STORAGE REQUIREMENTS - HSG D SOILS

	Cropland Disturbance	Forest Disturbance	
Layout	***Forebay/Detention Combo (cf)***	***Forebay (cf)***	***Detention Basin (cf)***
1-House	4000	8775	5475
2-House	8000	17550	10950
3-House	12000	26325	16425
4-House	16000	35075	21900
Per 1000 SF Impervious*	100	135	80

* Area to be captured by Ephemeral Wetland Forebay.

Table 2

SUSSEX COUNTY

STORMWATER STORAGE REQUIREMENTS - HSG A SOILS

	Cropland Disturbance	Forest Disturbance	
Layout	***Forebay/Detention Combo (cf)***	***Forebay (cf)***	***Detention Basin (cf)***
1-House	9375	8350	43750
2-House	18750	16675	87500
3-House	28125	25025	131250
4-House	37500	33350	175000
Per 1000 SF Impervious*	200	205	480

* Area to be captured by Ephemeral Wetland Forebay.

STORMWATER STORAGE REQUIREMENTS - HSG B SOILS

	Cropland Disturbance	Forest Disturbance	
Layout	***Forebay/Detention Combo (cf)***	***Forebay (cf)***	***Detention Basin (cf)***
1-House	6625	9575	23700
2-House	13250	19125	47400
3-House	19875	28700	71100
4-House	26500	38250	94800
Per 1000 SF Impervious*	150	195	250

* Area to be captured by Ephemeral Wetland Forebay.

STORMWATER STORAGE REQUIREMENTS - HSG C SOILS

	Cropland Disturbance	Forest Disturbance	
Layout	***Forebay/Detention Combo (cf)***	***Forebay (cf)***	***Detention Basin (cf)***
1-House	5250	9575	10300
2-House	10500	19125	20625
3-House	15750	28700	30925
4-House	21000	38250	41250
Per 1000 SF Impervious*	120	160	130

* Area to be captured by Ephemeral Wetland Forebay.

STORMWATER STORAGE REQUIREMENTS - HSG D SOILS

	Cropland Disturbance	Forest Disturbance	
Layout	***Forebay/Detention Combo (cf)***	***Forebay (cf)***	***Detention Basin (cf)***
1-House	3875	8775	5580
2-House	7750	17550	11160
3-House	11625	26325	16740
4-House	15500	35075	22320
Per 1000 SF Impervious*	100	135	80

* Area to be captured by Ephemeral Wetland Forebay.

Table 3

Standard Detail & Specifications

Construction Site Waste Mgt & Spill Control

DATA TO BE PROVIDED

Volume of Potential Pollution
Height of containment
Area of containment
Volume of containment

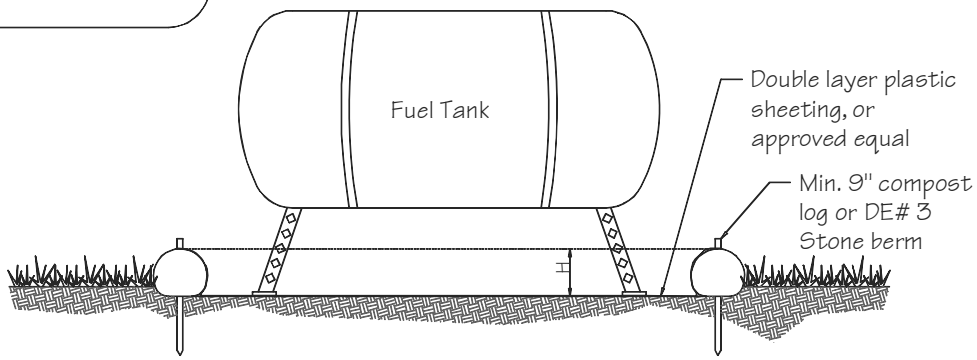

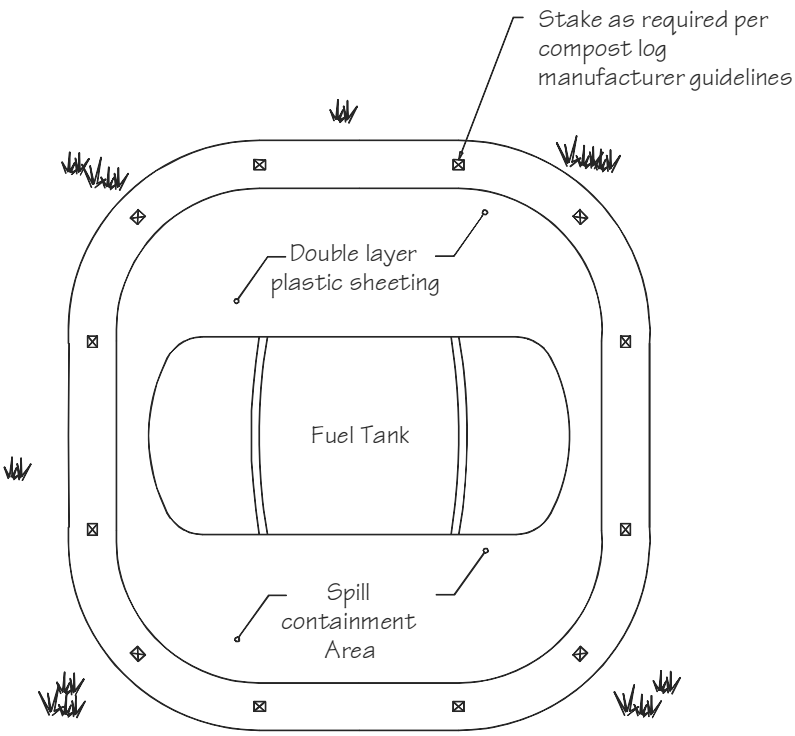

Source:	Symbol:	Detail No.
Delaware ESC Handbook		**DE-ESC-3.6.1** Sheet 1 of 5

Effective February 2019

Construction Site Waste Mgt & Spill Control

Pollution Prevention – Spill Prevention

1. Fueling should only take place in signed designated areas, away from downstream drainage facilities and watercourses.
2. Fueling must be with nozzles equipped with automatic shut-off to control drips. Do not top off.
3. Protect the areas where equipment or vehicles are being repaired, maintained, fueled or parked from storm water run-on and runoff.
4. Use barriers such as berms to prevent storm water run-on and runoff, and to contain spills.
5. Place a "Fueling Area" sign next to each fueling area.
6. Store hazardous materials such as fuel, solvents, oil and chemicals in secondary containment.
7. Inspect vehicles and equipment for leaks on each day of use. Repair fluid and oil leaks immediately.
8. Absorbent spill clean-up materials and spill kits must be available in fueling areas and on fuel trucks.
9. If fueling is to take place at night, make sure the fueling area is sufficiently illuminated.
10. Properly dispose of used oil, fluids, lubricants and spill clean-up materials.

CLEAN UP SPILLS

1. If it is safe to do so, immediately contain and clean up any chemical and/or hazardous material spills.
2. Properly dispose of used oil, fluids, lubricants and spill clean-up materials.
3. Do not bury spills or wash them down with water.

LEAKS AND DRIPS

1. Use drip pans or absorbent pads at all times. Place under and around leaky equipment.
2. Do not allow oil, grease, fuel or chemicals to drip onto the ground.
3. Have spill kits and clean up material on-site.
4. Repair leaky equipment promptly or remove problem vehicles and equipment from the site. Clean up contaminated soil immediately.
5. Store contaminated waste in sealed containers constructed of suitable material. Label these containers properly.
6. Clean up all spills and leaks. Promptly dispose of waste and spent clean up materials.

Source:	Symbol:	Detail No.
Delaware ESC Handbook		**DE-ESC-3.6.1** Sheet 2 of 5

Construction Site Waste Mgt & Spill Control

Notes:

The Construction Site Pollution Prevention Plan should include the following elements:

1. Material Inventory

Document the storage and use of the following materials:

a. Concrete
b. Detergents
c. Paints (enamel and latex)
d. Cleaning solvents
e. Pesticides
f. Wood scraps
g. Fertilizers
h. Petroleum based products

2. Good housekeeping practices

a. Store only enough product required to do the job.

b. All materials shall be stored in a neat, orderly manner in their original labeled containers and covered.

c. Substances shall not be mixed.

d. When possible, all of a product shall be used up prior to disposal of the container.

e. Manufacturers' instructions for disposal shall be strictly adhered to.

f. The site foreman shall designate someone to inspect all BMPs daily.

3. Waste management practices

a. All waste materials shall be collected and stored in securely lidded dumpsters in a location that does not drain to a waterbody.

b. Waste materials shall be salvaged and/or recycled whenever possible.

c. The dumpsters shall be emptied a minimum of twice per week, or more if necessary. The licensed trash hauler is responsible for cleaning out dumpsters.

Source:	Symbol:	Detail No.
Adapted from USEPA Pub. 840-B-92-002		**DE-ESC-3.6.1** Sheet 3 of 5

Construction Site Waste Mgt & Spill Control

Notes (cont.)

d. Trash shall be disposed of in accordance with all applicable Delaware laws.

e. Trash cans shall be placed at all lunch spots and littering is strictly prohibited. Recycle bins shall be placed near the construction trailer.

f. If fertilizer bags can not be stored in a weather-proof location, they shall be kept on a pallet and covered with plastic sheeting which is overlapped and anchored.

4. Equipment maintenance practices

a. If possible, equipment should be taken to off-site commercial facilities for washing and maintenance.

b. If performed on-site, vehicles shall be washed with high-pressure water spray without detergents in an area contained by an impervious berm.

c. Drip pans shall be used for all equipment maintenance.

d. Equipment shall be inspected for leaks on a daily basis.

e. Washout from concrete trucks shall be disposed of in a temporary pit for hardening and proper disposal.

f. Fuel nozzles shall be equipped with automatic shut-off valves.

g. All used products such as oil, antifreeze, solvents and tires shall be disposed of in accordance with manufacturers' recommendations and local, state and federal laws and regulations.

5. Spill prevention practices

a. Potential spill areas shall be identified and contained in covered areas with no connection to the storm drain system.

b. Warning signs shall be posted in hazardous material storage areas.

c. Preventive maintenance shall be performed on all tanks, valves, pumps, pipes and other equipment as necessary.

d. Low or non-toxic substances shall be prioritized for use.

Construction Site Waste Mgt & Spill Control

Notes (cont.)

e. Contact information for reporting spills through the DNREC 24-Hour Toll Free Number shall be prominently posted.

6. Education

a. Best management practices for construction site pollution control shall be a part of regular progress meetings.

b. Information regarding waste management, equipment maintenance and spill prevention shall be prominently posted in the construction trailer.

CONTACT INFORMATION

DNREC 24-Hour Toll Free Number	**800-662-8802**
DNREC Solid & Hazardous Waste Branch	**302-739-9403**

Source:	Symbol:	Detail No.
Adapted from USEPA Pub. 840-B-92-002		**DE-ESC-3.6.1** Sheet 5 of 5

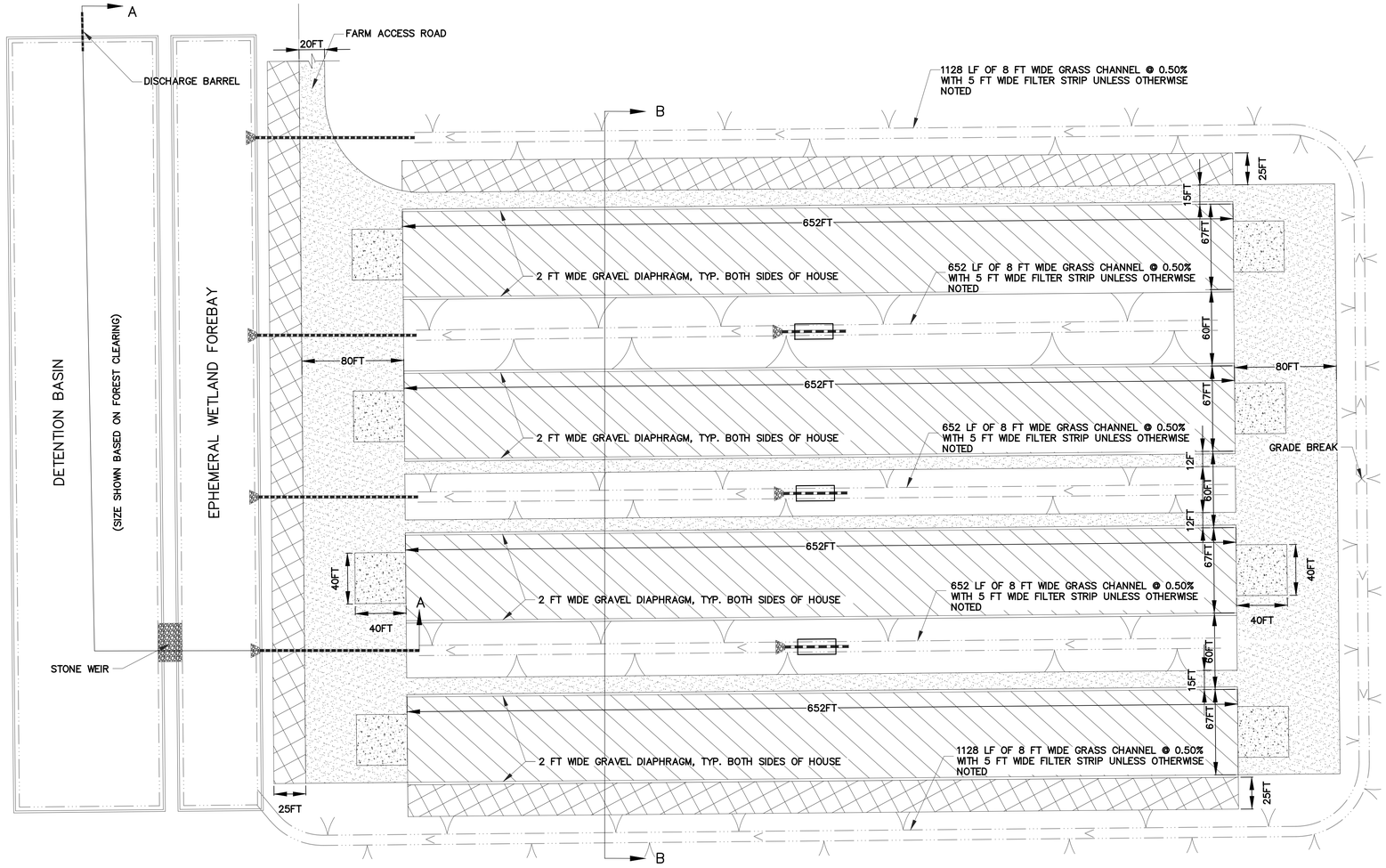

SITE PLAN - 60 FT SPACING

1" = 50'

0 50 100 150 FEET

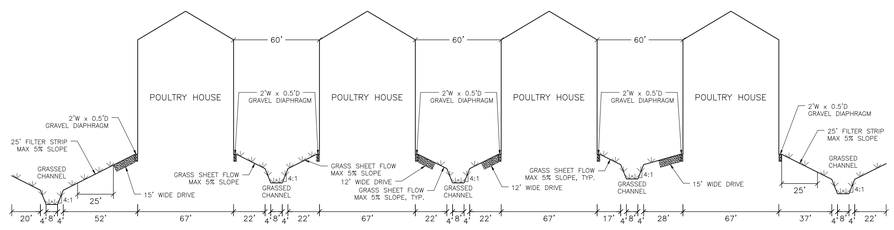

CROSS SECTION: SECTION B-B

HORZ: 1" = 50' VERT: 1" = 5'

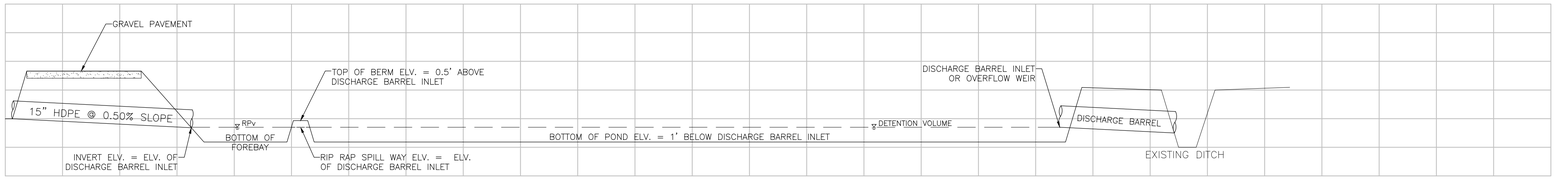

PROFILE: SECTION A-A

HORZ: 1" = 50' VERT: 1" = 5'

LEGEND

- SLOPE GREATER THAN 2%
- BUILDING
- GRAVEL PAVE
- BOTTOM OF BANK
- CONCRETE
- 25FT WIDE FILTER STRIP
- CULVERT

NOTES:

1. THE INVERT OF THE FOREBAY SHOULD BE LOCATED ABOVE THE AVERAGE GROUNDWATER ELEVATION.
2. FOREBAYS LOCATED IN HSG A/B SOILS SHOULD BE NO DEEPER THAN 2' AS MEASURED FROM THE INVERT OF THE OVERFLOW WEIR TO THE BOTTOM OF THE FOREBAY. FOREBAYS LOCATED IN HSG C/D SOILS SHOULD BE NO DEEPER THAN 1' AS MEASURED FROM THE INVERT OF THE OVERFLOW WEIR TO THE BOTTOM OF THE FOREBAY.
3. FOREBAYS LOCATED IN HSG A/B SOILS SHOULD BE PLANTED WITH A MIX OF NATIVE WARM SEASON GRASSES (EX., ERNST MIX-894) . FOREBAYS LOCATED IN HSG C/D SOILS SHOULD BE PLANTED WITH A MIX OF NATIVE PLANTS THAT CAN WITHSTAND PROLONGED PERIODS OF SATURATION (EX., ERSNT MIX-126).
4. THE FOREBAY SHOULD BE CONSTRUCTED AS A SEPARATE FACILITY. IF ADDITIONAL DETENTION STORAGE OR BORROW MATERIAL IS REQUIRED, THE EXCAVATED AREA SHOULD BE SEPARATED FROM THE FOREBAY BY AN EARTHEN BERM WITH MINIMUM TOPWIDTH OF 6'.
5. WHEN THE SITE DISCHARGES VIA A CLOSED PIPE, THE MINIMUM DIAMETER WILL BE 18 INCHES. THE INVERT ELEVATIONS OF THE DISCHARGE PIPE WILL BE PROVIDED ON THE PLAN.

Seal:

Revision:	By:	Date:

POULTRY HOUSE STORMWATER STANDARD PLAN

60 FT SPACING

Date:	AUG. 23, 2016
Scale:	1" = 50'
Dwn.By:	
Proj.No.:	

Dwg.:

EXHIBIT 1

F:\sediment\Regulation Revisions SAN 2015-10\08-Legislative Updates\Ag Structures Standard Plan\SB 253 Poultry House Standard Plan\SB 253 - CAD\SB 253 - Exhibit #1.dwg Jan 10 , 2017 - 10:35am, (michael.falkowski)

Effective February 2019