APPLICATION NO. 2015-0556-S
INDEX PLAN
FOR
THE COMMONS AT LITTLE FALLS
CHRISTIANA HUNDRED - NEW CASTLE COUNTY
DELAWARE

SITE DATA

1. TAX PARCEL NUMBERS: 07-031.00-007 (LOT 9B)
   07-031.00-019 (LOT 9A)
   07-031.00-020 (LOT 9C)
2. SOURCE OF TITLE: 20130730-0049638
3. GROSS AREA: 24.646± ACRES
4. EXISTING ZONING: OR (OFFICE REGIONAL)

   BULK AREA RESTRICTIONS:

BLDG. STREET YARD SETBACK:	40'
BLDG. SIDE YARD:	15'
BLDG. REAR YARD:	15'
MIN. LOT AREA:	1 ACRE
MIN. LOT WIDTH:	100'
MAX. BUILDING HEIGHT:	50'/140'
PARKING SETBACK (STREET/OTHER):	40'/10'
MIN. LANDSCAPE SURFACE RATIO	0.20
MAX. NET FLOOR AREA RATIO	0.47
MAX. GROSS FLOOR AREA RATIO	0.37

5. TOPOGRAPHIC SURVEY:
   A. TOPOGRAPHIC INFORMATION IS BASED ON AERIAL SURVEY FLOWN BY AXIS GEOSPATIAL, L.L.C. ON SEPTEMBER 4, 2013.
   B. HORIZONTAL DATUM: NAD 83/2011
      VERTICAL DATUM: NAVD 88
      BENCHMARK: TOP OF CONCRETE MONUMENT AT THE SOUTHEAST INTERSECTION OF CENTERVILLE ROAD AND LANCASTER PIKE.
      ELEVATION: 219.72
   C. PERIMETER PROPERTY CORNER MARKERS:
      ● ■ EXISTING (7)
      ○ □ PROPOSED (0)
6. WATER SUPPLY: ARTESIAN WATER COMPANY
   WATER SUPPLY IS SUBJECT TO THE APPROVAL OF THE DELAWARE STATE DEPARTMENT OF NATURAL RESOURCES AND ENVIRONMENTAL CONTROL AND THE DELAWARE DEPARTMENT OF PUBLIC HEALTH.
7. SANITARY SEWER: NEW CASTLE COUNTY – PRIVATE – GRAVITY
   SEWERAGE IS SUBJECT TO THE APPROVAL OF THE NEW CASTLE COUNTY DEPARTMENT OF SPECIAL SERVICES. AT THE TIME OF APPROVAL OF THIS PLAN, SEWER CAPACITY EXISTED TO ACCOMMODATE THE ANTICIPATED FLOWS GENERATED BY THIS ADDITIONAL DEVELOPMENT. NEW CASTLE COUNTY HAS COMMITTED TO PROVIDE SEWER IN ACCORDANCE WITH THE LAND DEVELOPMENT IMPROVEMENT AGREEMENT FOR THIS DEVELOPMENT. THE OWNER OF THIS PROPERTY, HIS SUCCESSOR OR ASSIGNS, SHALL BE RESPONSIBLE FOR EXTENDING SEWER SERVICE TO EACH LOT SHOWN ON OR CREATED BY THIS PLAN.
   NO ADDITIONAL SEWER FLOWS ARE GENERATED BY THIS PROJECT.
8. DEBRIS DISPOSAL: NO DEBRIS WILL BE BURIED OR DISPOSED OF ON THIS SITE.
9. WATER RESOURCE PROTECTION: NO PORTION OF THIS PROPERTY IS LOCATED WITHIN A WATER RESOURCE PROTECTION AREA (WRPA). SEE WRPA MAP FOR NEW CASTLE COUNTY, DE, SHEET 1 OF 3, DATED 1987, REVISED 1993, MAY 2001, FEBRUARY 2006 AND DECEMBER 2011.
10. NO 100-YEAR FLOOD PLAIN EXISTS ON THIS PARCEL, IN ACCORDANCE WITH FLOOD INSURANCE RATE MAPS, 10003C0045J AND 10003C0065J DATED JANUARY 17, 2007.
11. CRITICAL NATURAL AREAS: THE STATE INVENTORY OF CRITICAL NATURAL AREAS HAS BEEN EXAMINED AND NONE WERE FOUND TO EXIST ON THE SITE.
12. WETLANDS: THIS SITE WAS EVALUATED IN ACCORDANCE WITH THE PROCEDURES SET FORTH IN THE 1987 CORPS OF ENGINEERS WETLAND DELINEATION MANUAL (TECHNICAL REPORT Y-87-1), AND SUBSEQUENT PUBLIC NOTICES, TO IDENTIFY THE PRESENCE OF JURISDICTIONAL WETLANDS, AND NO WETLANDS WERE FOUND TO EXIST ON THE SITE.
13. SITE POSTAL ADDRESSES:
    T.P. 07-031.00-007 (LOT 9B) 251 LITTLE FALLS DRIVE, WILMINGTON, DE 19808
    T.P. 07-031.00-019 (LOT 9A) 301 LITTLE FALLS DRIVE, WILMINGTON, DE 19808
    T.P. 07-031.00-020 (LOT 9C) 201 LITTLE FALLS DRIVE, WILMINGTON, DE 19808
14. VARIANCES: NO VARIANCES ARE REQUESTED.
15. WAIVERS: A WAIVER TO PERMIT FLUSH CURBING ALONG THE HANDICAP PARKING BAY AND FIRE LANE ACCESS WAY WAS GRANTED ON AUGUST 12, 2015.
16. THE TOTAL LAND DISTURBANCE PROPOSED BY THIS PLAN IS 772,425 S.F. (17.9± ACRES).
17. THE NOTICE OF INTENT (NOI) FOR STORMWATER DICHARGES ASSOCIATED WITH CONSTRUCTION ACTIVITY UNDER A NPDES GENERAL PERMIT HAS BEEN FILED WITH THE STATE OF DELAWARE DEPARTMENT OF NATURAL RESOURCES AND ENVIRONMENTAL CONTROL FOR THIS PROJECT AND HAS BEEN ASSIGNED DATABASE I.D. #4944.
18. INSTRUMENT NUMBER _____

GENERAL CONSTRUCTION NOTES

1. ALL WORK AND MATERIALS WILL BE IN ACCORDANCE WITH THE NEW CASTLE COUNTY STANDARD SPECIFICATIONS AND DETAILS, THE DELAWARE DEPARTMENT OF TRANSPORTATION (DELDOT) STANDARD SPECIFICATIONS, DATED AUGUST 2001, AND/OR THE DELDOT STANDARD DETAILS, LATEST REVISION, OR AS MODIFIED BY THESE PLANS.
2. ALL EROSION AND SEDIMENT CONTROL MEASURES SHALL BE IN ACCORDANCE WITH THE DELAWARE EROSION AND SEDIMENT CONTROL HANDBOOK (2004).
3. MATCH PROPOSED PAVING AND CURBING ELEVATIONS TO EXISTING PAVING AND CURBING ELEVATIONS WHEREVER THEY ADJOIN.
4. SAW CUT AT THE JUNCTION FOR ALL EXISTING PAVEMENT AND FOR ALL PAVEMENT REMOVAL.
5. PLAN LOCATIONS AND DIMENSIONS SHALL BE STRICTLY ADHERED TO, UNLESS OTHERWISE DIRECTED BY THE ENGINEER.
6. ALL RADII AND DIMENSIONS ARE MEASURED TO THE (FACE/BACK) OF CURB, UNLESS OTHERWISE NOTED.
7. THE CONTRACTOR SHALL NOTIFY MISS UTILITY AT 1-800-282-8555 A MINIMUM OF 72 HOURS PRIOR TO EXCAVATION OR CONSTRUCTION.
8. LANDMARK ENGINEERING, INC. MAKES NO GUARANTEE AS TO THE EXISTENCE OR NON-EXISTENCE, LOCATION, DEPTH, SIZE, OR CONDITION OF ANY UNDERGROUND UTILITIES SHOWN ON THIS PLAN NOT ACCESSIBLE FROM THE SURFACE OF THE GROUND. EXISTING UTILITIES ARE SHOWN IN ACCORDANCE WITH INFORMATION PROVIDED BY THE RESPECTIVE UTILITY COMPANIES AT THE TIME THE PLAN WAS PREPARED. THE CONTRACTOR IS TO COORDINATE ALL WORK WITH THE UTILITY COMPANIES INVOLVED.
   IT IS THE RESPONSIBILITY OF THE OWNER, OR HIS CONTRACTOR, TO VERIFY AND ALLOW FOR THE LOCATION AND DEPTH OF THE UNDERGROUND UTILITIES WITHIN THE WORK AREA SHOWN ON THIS PLAN. THE CONTRACTOR SHALL NOT BEGIN ANY EXCAVATION OR OTHER CONSTRUCTION AROUND OR IMMEDIATELY ADJACENT TO EXISTING UTILITIES WITHOUT NOTIFYING THE UTILITY OWNER(S) AT LEAST SEVENTY-TWO (72) HOURS IN ADVANCE OF THE START OF EXCAVATION OR CONSTRUCTION. TEST PITS FOR UTILITY LOCATIONS MAY OR MAY NOT BE REQUIRED.
   PRIOR TO ANY CONSTRUCTION, IT IS RECOMMENDED THE CONTRACTOR EXCAVATE IN THE AREA OF ANY POTENTIAL UTILITY CROSSING TO VERIFY THAT THE UTILITY WILL NOT INTERFERE WITH CONSTRUCTION. IF, AFTER UNCOVERING THE UTILITY, THERE IS ANY QUESTION CONCERNING A POSSIBLE CONFLICT, THE CONTRACTOR SHALL IMMEDIATELY CONTACT THE ENGINEER. THE CONTRACTOR SHALL TAKE ALL NECESSARY PRECAUTIONS TO PROTECT ALL EXISTING UTILITIES AND MAINTAIN UNINTERRUPTED SERVICE. ANY DAMAGE DONE TO THEM DUE TO HIS NEGLIGENCE SHALL BE IMMEDIATELY AND COMPETENTLY REPAIRED AT HIS EXPENSE.
9. EXISTING AERIAL UTILITIES ARE NOT SHOWN.
10. ALL NECESSARY PERMITS, LICENSES, BONDS, INSURANCE POLICIES, ETC. REQUIRED BY LOCAL STATE AND/OR FEDERAL LAWS SHALL BE PROVIDED BY THE CONTRACTOR AT HIS OWN EXPENSE.
11. STORM DRAINAGE PIPE:
    A. ALL CORRUGATED PLASTIC DRAINAGE PIPE SHALL BE HIGH DENSITY CORRUGATED POLYETHYLENE HAVING A MANNING'S (N) VALUE OF 0.012 (HDPE, N-12) AS MANUFACTURED BY ADVANCED DRAINAGE SYSTEMS, INC. OR APPROVED EQUAL, UNLESS OTHERWISE NOTED. ALL CORRUGATED PLASTIC PIPE SHALL MEET H-20 LOADING SPECIFICATIONS. ALL PIPE LENGTHS INCLUDE FLARED END SECTION (FES) WHEN APPLICABLE.
    B. ALL REINFORCED CONCRETE PIPE (RCP) SHALL BE CLASS III, UNLESS OTHERWISE NOTED.
    C. CORRUGATED METAL PIPE (CMP) SHALL BE 14 GAUGE (0.079" THICK) WITH HELICAL CORRUGATED, UNLESS OTHERWISE NOTED. ALUMINIZED STEEL PIPE AND/OR ALUMINUM PIPE MEETING H-20 LOADING SPECIFICATIONS MAY BE USED AS ALTERNATIVE MATERIALS WHERE NOTED.
12. PIPE BEDDING USED FOR THE INSTALLATION OF SANITARY SEWER SHALL MEET THE REQUIREMENTS INCLUDED IN THE NEW CASTLE COUNTY STANDARD SPECIFICATIONS FOR CONSTRUCTION AND AMENDMENTS. OTHERWISE, ALL OTHER PIPE BEDDING SHALL MEET THE REQUIREMENTS OF CLASS "C".
13. IT SHALL BE THE CONTRACTOR'S RESPONSIBILITY TO ENSURE THERE IS SUFFICIENT COVER ON ALL PIPING DURING CONSTRUCTION TO PREVENT FAILURE OF PIPES.
14. ALL SIGNING, TRAFFIC CONTROL AND SAFETY SHALL BE THE RESPONSIBILITY OF THE DEVELOPER/CONTRACTOR AND SHALL BE SUBJECT TO THE APPROVAL OF THE DIVISION OF HIGHWAYS. ALL TRAFFIC CONTROL SIGNS SHALL BE IN ACCORDANCE WITH THE "MANUAL ON UNIFORM TRAFFIC CONTROL DEVICES."
15. PAINT STRIPING AND GRAPHICS FOR LONGITUDINAL STRIPING SHALL BE EPOXY RESIN PAINT. LATERAL STRIPING/SHAPES SHALL BE ALKYD THERMOPLASTIC TAPE/SYMBOL.
16. ALL FIRE LANES, FIRE HYDRANTS, AND FIRE DEPARTMENT CONNECTIONS SHALL BE MARKED IN ACCORDANCE WITH DELAWARE STATE FIRE PREVENTION REGULATIONS AND PER THE APPROVED FIRE MARSHAL RECORD TYPE PLAN.
17. ALL PROPOSED UNDERGROUND UTILITIES SHALL BE MARKED WITH 6-INCH WIDE (MIN.) METALLIC MARKING TAPE OF APPROPRIATE COLOR AND MESSAGE TO CONFORM TO UTILITY BURIED BENEATH IT AND SHALL BE INSTALLED PER THE MANUFACTURER'S RECOMMENDATIONS.
18. ALL UTILITY EXCAVATION SHALL BE KEPT DRY AT ALL TIMES.
19. 4" PVC PIPE SLEEVES TO BE PROVIDED FOR ALL SIGNS IN SIDEWALK AREAS.
20. ALL AREAS NOT COVERED BY PAVING OR BUILDING SHALL RECEIVE 4" MINIMUM OF TOPSOIL, SEED, AND MULCH AS SOON AS FINAL GRADING IS COMPLETE.
21. NO DEBRIS SHALL BE BURIED ON SITE.
22. DISPOSITION OF ANY EXCESS EXCAVATION AND TOPSOIL TO BE AT THE DISCRETION OF THE OWNER.
23. PROVIDE EROSION CONTROL MATTING ON ALL SLOPES 3:1 OR STEEPER AND IN ALL OPEN CHANNELS.
24. CONCRETE SIDEWALKS SHALL BE 3,000 PSI PORTLAND CEMENT CONCRETE, 4" THICK, ON 4" GRADED AGGREGATE BASE COURSE, UNLESS OTHERWISE NOTED.
25. MINIMUM COMPACTION AS DEFINED BY STANDARD PROCTOR MAXIMUM DRY DENSITY (ASTM-D698) SHALL BE:

BUILDING SUBGRADE:	95 PERCENT
PAVEMENT SUBGRADE:	95 PERCENT
SIDEWALK AND LAWN SUBGRADE:	90 PERCENT

26. P.C. CONCRETE BUTTRESSES (2500 PSI MIN.) SHALL BE PLACED AT ALL VERTICAL AND HORIZONTAL WATER MAIN BENDS. BUTTRESSES SHALL BE PLACED AGAINST UNDISTURBED EARTH AND SHALL BE OF ADEQUATE SIZE TO RESIST THE FORCES DEVELOPED IN THE WATER PIPING. ALL MATERIALS AND METHODS OF CONSTRUCTION SHALL BE IN ACCORDANCE WITH ARTESIAN WATER COMPANY STANDARDS.
27. ALL WATER MAINS SHALL HAVE A MINIMUM OF 42-INCHES OF COVER FROM PROPOSED FINISHED GRADE, EXCEPT AS NOTED.
28. ALL WATER MAINS SHALL BE CONSTRUCTED IN ACCORDANCE WITH ARTESIAN WATER COMPANY STANDARDS. IT SHALL BE THE CONTRACTOR'S RESPONSIBILITY TO OBTAIN ALL INSPECTIONS AND APPROVALS.
29. SANITARY SEWER SHALL BE CONSTRUCTED IN ACCORDANCE WITH NEW CASTLE COUNTY SPECIFICATIONS.
30. STORMWATER QUALITY MANAGEMENT FACILITIES, IN ORDER TO MEET STRINGENT TECHNICAL REQUIREMENTS FOR LONG-TERM DETENTION, ARE OFTEN DESIGNED WITH SMALLER THAN NORMAL OUTLET COMPONENTS. THESE OUTLET COMPONENTS WILL REQUIRE FREQUENT MAINTENANCE TO ENSURE CONTINUED FUNCTIONING OF THE STORMWATER QUALITY FACILITY, AS WELL AS THE STORMWATER QUANTITY COMPONENT IN THE CASE OF A COMBINED STRUCTURE.
31. IT IS THE RESPONSIBILITY OF THE CONTRACTOR TO REPAIR AND STABILIZE EROSION AND SEDIMENT CONTROLS AND STORMWATER MANAGEMENT PRACTICES DURING CONSTRUCTION, INCLUDING AREAS DISTURBED BY UTILITY COMPANIES.
32. CONCRETE BOLLARDS TO BE PLACED AROUND ALL ELECTRIC TRANSFORMERS AND GAS METERS. LOCATIONS OF BOLLARDS TO BE DETERMINED WHEN THE FINAL UTILITY LOCATIONS ARE IDENTIFIED.
33. A 10' STORMWATER MANAGEMENT MAINTENANCE EASEMENT AROUND EACH STORMWATER MANAGEMENT AREA SHOWN ON THIS PLAN IS PROVIDED TO ALLOW PEDESTRIAN, VEHICLE AND EQUIPMENT ACCESS TO THE STORMWATER MANAGEMENT AREAS FOR THE PURPOSES OF INSPECTION, EVALUATION AND MAINTENANCE. AN ACCESS EASEMENT IS ALSO PROVIDED TO ALLOW PEDESTRIAN, VEHICLE AND EQUIPMENT ACCESS FROM A PUBLIC RIGHT-OF-WAY TO EACH STORMWATER MANAGEMENT AREA. WHERE POSSIBLE, SUCH ACCESS SHALL BE TAKEN ACROSS A PRIVATE RIGHT-OF-WAY AND THROUGH DESIGNATED OPEN SPACE. IN SUCH CASES, THE EASEMENT SHALL ENCUMBER THE ENTIRE PRIVATE RIGHT-OF-WAY AND ALL OPEN SPACE AREAS. THE EASEMENTS PROVIDED HEREIN SHALL BE RUN IN FAVOR OF NEW CASTLE COUNTY, ITS AGENTS, AND ASSIGNS.
34. ALL RETAINING WALLS WITH A REVEAL HEIGHT HIGHER THAN FOUR (4) FEET SHALL REQUIRE A BUILDING PERMIT PRIOR TO START OF CONSTRUCTION. THE CONTRACTOR IS RESPONSIBLE FOR OBTAINING STRUCTURALLY ENGINEERED WALL PLANS FOR PERMITTING IN COORDINATION WITH THE OWNER/DEVELOPER AND ARCHITECT. RETAINING WALLS SHALL BE DESIGNED ACCORDING TO THE BOCA INTERNATIONAL BUILDING CODE AND APPROVED BY THE DEPARTMENT OF LAND USE PRIOR TO CONSTRUCTION.
35. LANDMARK SCIENCE & ENGINEERING (LSE) MAKES NO GUARANTEE AS TO SUBSURFACE CONDITIONS THAT MAY BE ENCOUNTERED DURING CONSTRUCTION. VARIATIONS IN CONDITIONS ARE THE RESPONSIBILITY OF THE OWNER, OR HIS CONTRACTOR, INCLUDING BUT NOT LIMITED TO GROUNDWATER, UNSUITABLE MATERIAL, ROCK, BURIED TANKS, ETC. LSE RECOMMENDS A GEOTECHNICAL CONSULTANT BE RETAINED TO EVALUATE AND MONITOR CONDITIONS BEFORE AND DURING CONSTRUCTION. SHOULD ADDITIONAL MEASURES BE NECESSARY, SUCH AS UNDERCUTTING, WELL-POINTING, STONE BEDDING UNDER PIPES, TANK REMOVAL, ETC. THE CONTRACTOR SHALL IMMEDIATELY CONTACT THE ENGINEER. THE CONTRACTOR SHALL TAKE ALL NECESSARY PRECAUTIONS AND FOLLOW THE RECOMMENDATIONS OF THE ENGINEER AND/OR THE GEOTECHNICAL ENGINEER AND COMPLY WITH ALL APPLICABLE LOCAL, STATE AND/OR FEDERAL LAWS.
36. DECOMPACTION OF SUBSOIL WITHIN PLANTING AREAS SHALL BE PERFORMED AS OUTLINED BELOW:
    A. PLANTING AND TURF AREAS: COMPACTED SUBSOIL SHALL BE RIPPED TO A MINIMUM DEPTH OF 18 INCHES.
    B. CLEARLY MARK ALL LOCATIONS OF UNDERGROUND UTILITIES, IRRIGATION LINES, TREE ROOTS OR OTHER OBSTRUCTIONS TO BE AVOIDED PRIOR TO BEGINNING.
    C. RIPPING SHALL OCCUR IN TWO PASSES (MINIMUM) AT 45 DEGREE ANGLES TO ONE ANOTHER. IN LINEAR AREAS TO NARROW TO ACHIEVE A 45 DEGREE PASS, THE SECOND PASS SHALL BE PERFORMED IN AN 'S' CURVE.
    D. WORK SHALL PROCEED AWAY FROM FINISHED AREAS IN ORDER TO PROTECT AGAINST FURTHER COMPACTION.
    E. SLOPES GREATER THAN 5:1 SHALL NOT BE DECOMPACTED.
    F. SOILS SHALL NOT BE RIPPED WHEN THE GROUND IS WET. SAMPLES TAKEN FROM A DEPTH OF 18" SHALL NOT BE IN A PLASTIC STATE AT THE TIME OF DECOMPACTION.

Know what's **below.**
Call before you dig.
MISS UTILITY PHONE 1-800-282-8555
PROTECT YOURSELF, GIVE THREE WORKING DAYS NOTICE

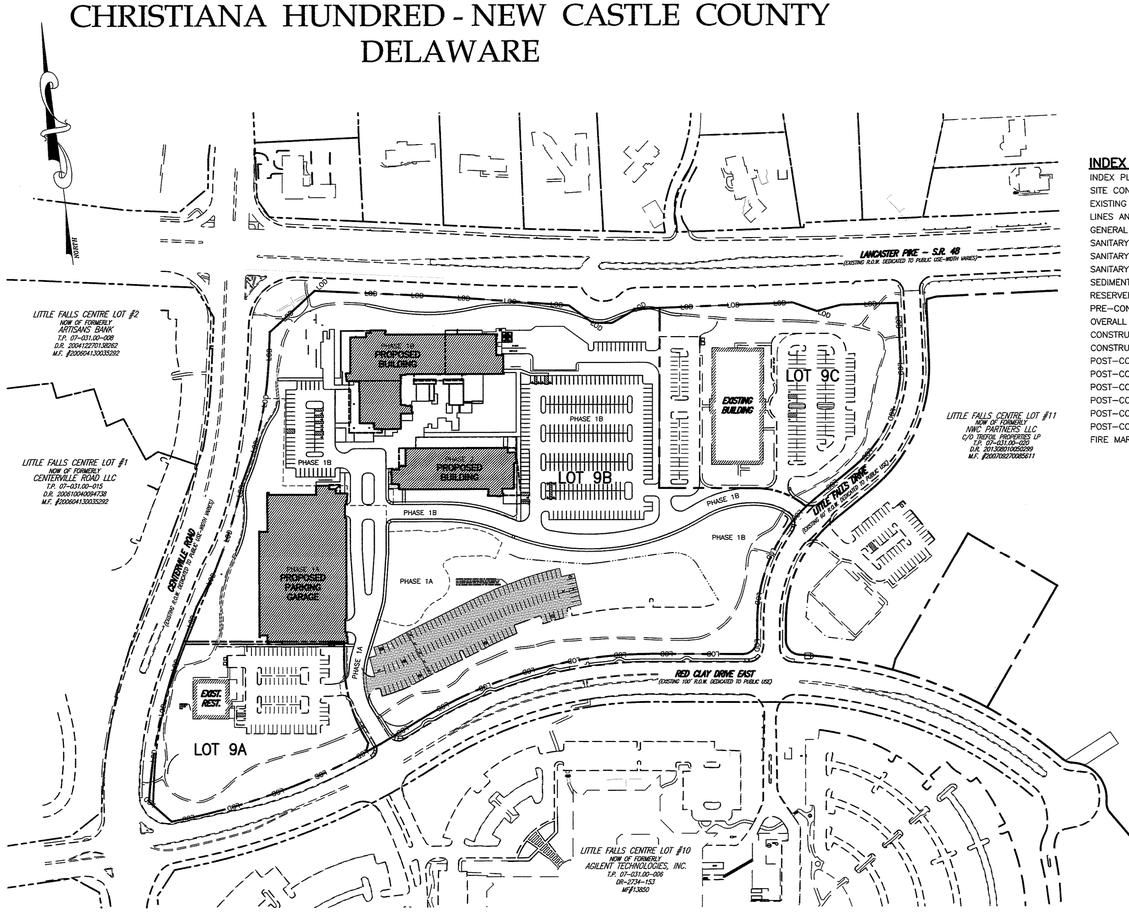

INDEX PLAN
SCALE: 1"=150'

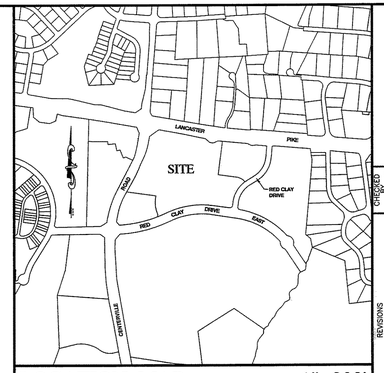

LOCATION MAP 1"=800'

INDEX OF SHEETS

INDEX PLAN	CC-01
SITE CONSTRUCTION DETAILS	CC-02 TO CC-03
EXISTING CONDITIONS AND DEMOLITION PLAN	CC-04 TO CC-07
LINES AND GRADES PLAN	CC-08 TO CC-11
GENERAL SITE LAYOUT AND UTILITY PLANS	CC-12 TO CC-15
SANITARY SEWER INDEX PLAN	CY-01
SANITARY SEWER PLAN AND PROFILE	CY-02
SANITARY SEWER DETAILS	CY-03
SEDIMENT AND STORMWATER COVER SHEET AND GENERAL NOTES	CE-01
RESERVED	CE-02
PRE-CONSTRUCTION SITE STORMWATER MANAGEMENT PLANS	CE-03 TO CE-06
OVERALL CONSTRUCTION SITE STORMWATER MANAGEMENT PLAN	CE-07
CONSTRUCTION SITE SITE STORMWATER MANAGEMENT PLANS	CE-08 TO CE-11
CONSTRUCTION SITE DETAILS AND NOTES	CE-12 TO CE-15
POST-CONSTRUCTION STORMWATER MANAGEMENT PLAN – FACILITY #1	CE-16
POST-CONSTRUCTION STORMWATER MANAGEMENT PLAN – FACILITY #2 & #4	CE-17
POST-CONSTRUCTION STORMWATER MANAGEMENT PLAN – FACILITY #3	CE-18
POST-CONSTRUCTION STORMWATER MANAGEMENT PLAN – FACILITY #8	CE-19
POST-CONSTRUCTION STORMWATER MANAGEMENT PLAN – FACILITY #9	CE-20
POST-CONSTRUCTION STORMWATER MANAGEMENT PLAN – FACILITY #10	CE-21
FIRE MARSHAL RECORD TYPE PLANS	CF-01 TO CF-05

LEGEND

EX. 8"W —8W—	EXISTING WATER MAIN AND WATER VALVE
—8"W—	PROPOSED WATER MAIN AND WATER VALVE
	PROPOSED DRAINAGE FLOW PATH
	EXISTING VERTICAL P.C.C. CURB
	PROPOSED VERTICAL P.C.C. CURB
	PROPOSED FLUSH P.C.C. CURB
	EXISTING P.C.C. SIDEWALK
	PROPOSED P.C.C. SIDEWALK (STANDARD BROOM FINISH)
	PROPOSED P.C.C. SIDEWALK (EXPOSED AGGREGATE)
	PROPOSED ASPHALT SIDEWALK
	PROPOSED ASPHALT PAVEMENT (LIGHT DUTY)
	PROPOSED ASPHALT PAVEMENT (HEAVY DUTY)
	PROPOSED MILL AND OVERLAY
	PROPOSED GRANITE PAVERS
	PROPOSED CONCRETE PAD
	EXISTING BUILDING
	PROPOSED BUILDING
130	EXISTING CONTOUR
130	PROPOSED CONTOUR
+ 130.0	EXISTING SPOT ELEVATION
+ 130.00	PROPOSED SPOT ELEVATION
SS	EXISTING SANITARY SEWER AND MANHOLE
	PROPOSED SANITARY SEWER AND MANHOLE
	EXISTING STORM DRAIN AND CATCH BASIN
	PROPOSED STORM DRAIN AND CATCH BASIN
GV	EXISTING GAS MAIN AND GAS VALVE
FH	EXISTING FIRE HYDRANT
FH	PROPOSED FIRE HYDRANT
FL	PROPOSED FIRE LANE SIGN

THE PURPOSES OF THIS PLAN ARE:

1. TO RECONFIGURE THE G.F.A. APPROVED UNDER INSTRUMENT NUMBER 20150814-0041262 FOR THESE THREE PARCELS TOTALING 235,500 S.F. G.F.A.
2. TO ELIMINATE A PORTION OF THE PREVIOUSLY APPROVED SURFACE PARKING (560 SPACES) AND THEIR ASSOCIATED STORMWATER FACILITIES.
3. TO CONSTRUCT A 4-LEVEL, 644 STALL, 218,945 S.F. PARKING GARAGE.
4. TO ADJUST THE COMMON PROPERTY LINE BETWEEN LOT 9A AND 9B SOUTH OF THE PROPOSED PARKING GARAGE.
5. TO RECONFIGURE THE PARKING AREA WEST OF THE PHASE 1 BUILDING.

CERTIFICATION OF PLAN ACCURACY

I, TED C. WILLIAMS, HEREBY CERTIFY THAT I AM A REGISTERED PROFESSIONAL ENGINEER IN THE STATE OF DELAWARE AND THAT ALL OF THE INFORMATION ON THIS PLAN IS TRUE AND CORRECT TO THE ACCURACY REQUIRED BY ACCEPTED SURVEYING STANDARDS AND PRACTICES AND BY THE NEW CASTLE COUNTY UNIFIED DEVELOPMENT CODE.

TED C. WILLIAMS, P.E.
DE P.E. #9461

1/22/16
DATE

CERTIFICATION OF OWNER

I, THE UNDERSIGNED, HEREBY CERTIFY THAT CSC SPECTRUM LITTLE FALLS, LLC & NWC-SPE LLC ARE THE OWNERS OF THE PROPERTIES WHICH ARE THE SUBJECT OF THIS PLAN AND THAT THE LAND USE ACTION PROPOSED BY THIS PLAN IS MADE AT MY DIRECTION AND THAT I AUTHORIZE THIS PLAN TO BE APPROVED PURSUANT TO THE RECORD PLAN (INST. NUMBER _____) IN ACCORDANCE WITH THE REGULATIONS OF THE NEW CASTLE COUNTY UNIFIED DEVELOPMENT CODE.

FURTHERMORE, I HEREBY CERTIFY THAT ALL LAND CLEARING, CONSTRUCTION, AND DEVELOPMENT SHALL BE DONE PURSUANT TO THE APPROVED PLAN AND THAT ALL RESPONSIBLE PERSONNEL (I.E. CLUE CARD HOLDER) INVOLVED IN THE LAND DISTURBANCE WILL HAVE A CERTIFICATE OF TRAINING PRIOR TO INITIATION OF THE PROJECT, AT A DNREC SPONSORED OR APPROVED TRAINING COURSE FOR THE CONTROL OF EROSION AND SEDIMENT DURING CONSTRUCTION. IN ADDITION, I GRANT THE DNREC SEDIMENT AND STORMWATER PROGRAM AND/OR THE RELEVANT DELEGATED AGENCY (NEW CASTLE COUNTY) THE RIGHT TO CONDUCT ON-SITE REVIEWS, AND I UNDERSTAND MY RESPONSIBILITES UNDER THE NPDES CONSTRUCTION GENERAL PERMIT, AS REFERENCED ON THIS COVER SHEET.

JAMES R. WRIGLEY, MANAGING MEMBER
CSC SPECTRUM LITTLE FALLS, LLC & NWC-SPE LLC
C/O TREFOIL PROPERTIES LP
1650 SUMNEYTOWN PIKE
LANSDALE, PA 19446
(215) 855-5100 (PHONE)
(215) 855-6583 (FAX)

1/26/16
DATE

ENGINEERING
APPROVAL
Jan 28, 2016
REVIEWED BY
Michael Clendaniel

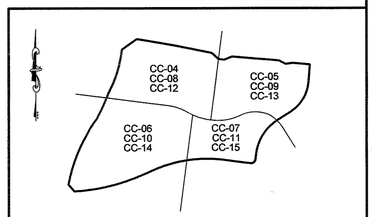

KEY MAP 1"=500'

REVISIONS		
1. REV. PER NCC ENGINEERING COMMENTS DATED 11-06-15	TCW	1-08-16
2. ISSUED FOR CONSTRUCTION 1-27-2016	JMW	1-27-16

APPLICATION NO. 2015-0556-S
INDEX PLAN
FOR
THE COMMONS AT LITTLE FALLS
CHRISTIANA HUNDRED – NEW CASTLE COUNTY, DELAWARE
CSC SPECTRUM LITTLE FALLS, LLC & NWC-SPE LLC
C/O TREFOIL PROPERTIES LP
1650 SUMNEYTOWN PIKE, SUITE 240
LANSDALE, PA 19446
(215) 855-5100

Landmark Science & Engineering
NEW CASTLE, DE (302) 323-9377
DOVER, DE (302) 734-9597
HAVRE DE GRACE, MD (410) 939-2144
100 WEST COMMONS BOULEVARD, SUITE 301
NEW CASTLE, DELAWARE 19720
PHONE: (302) 323-9377 • FAX: (302) 323-9461
INFO@LANDMARK-SE.COM • WWW.LANDMARK-SE.COM

GRAPHIC SCALE 0 75 150 300

THIS DRAWING AND THE DESIGN SHOWN ARE THE PROPERTY OF LANDMARK SCIENCE AND ENGINEERING AND SHALL NOT BE ALTERED OR COPIED WITHOUT WRITTEN PERMISSION.

ALL CONSTRUCTION MUST BE DONE IN ACCORDANCE WITH OSHA SAFETY AND HEALTH ACT OF 1970 AND THE RULES AND REGULATIONS THEREUNDER APPURTENANT

DRAWN BY: ALL	SCALE: 1"=150'		
DESIGNED BY: TCW/JMW	DATE: 8/26/15		
CHECKED BY: TCW	LAST MODIFIED 1/22/16		
COMM. NO. C1115-15	FILE NO.: XXX		
DRAWING NAME: INDEX.DWG			
CC-01	SHEET NO. CC-01 of 16		

© 2016 LANDMARK SCIENCE & ENGINEERING

P:\C1115-15 THE COMMONS AT LITTLE FALLS PARKING GARAGE\DWG\CNST\GENDEV\INDEX.DWG

CROSS-SLOPE OF CROSSWALKS CANNOT BE GREATER THAN 2%

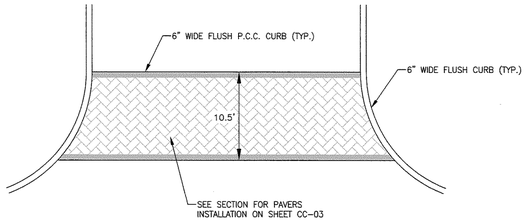

PAVER CROSSWALK DETAIL

N.T.S.

CROSS-SLOPE OF CROSSWALKS CANNOT BE GREATER THAN 2%

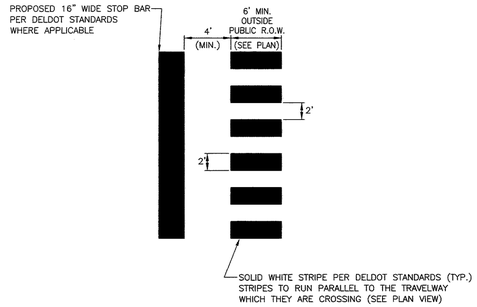

PAINTED CROSSWALK DETAIL

N.T.S.

SLOPE OF HANDICAP PARKING STALLS AND AISLES CANNOT BE GREATER THAN 2% IN ALL DIRECTIONS

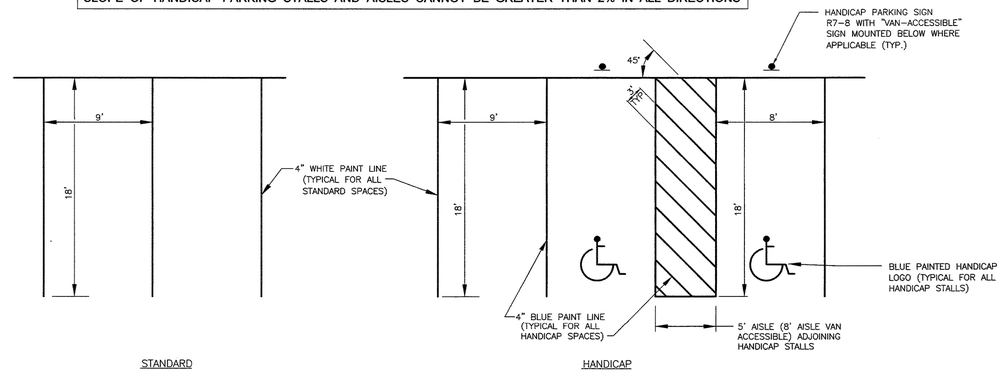

TYPICAL PARKING STALL LAYOUT

N.T.S.

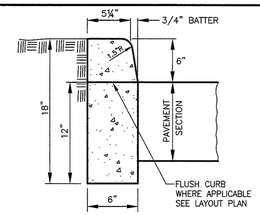

P.C.C. CURB TYPE 1-6 (MODIFIED) (ON-SITE ONLY)

NO SCALE

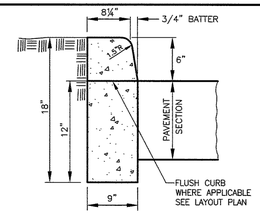

P.C.C. CURB TYPE 1-6 (ON MAIN ACCESS ROADS ONLY)

NO SCALE

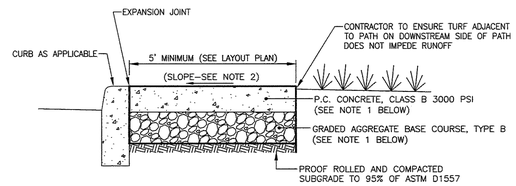

NOTES:

1. STANDARD SIDEWALK SHALL BE 4" THICK PLACED OVER 4" GABC-TYPE B. SIDEWALK FOR DEPRESSED AND TRANSITION AREAS SHALL BE 6" THICK PLACED OVER 6" GABC-TYPE B.
2. SIDEWALK TO BE CONSTRUCTED AT GRADE. CROSS-SLOPE OF SIDEWALK SHALL BE 1.5% (1% MIN. AND 2% MAX.) IN ORDER TO ASSURE POSITIVE DRAINAGE.
3. SIDEWALK SHALL BE MARKING INTO RECTANGULAR SLABS 5' LONG BY SCORING, 1/2" MINIMUM, WITH APPROVED EDGING TOOLS. THE SURFACE EDGES OF EACH SLAB SHALL BE ROUNDED TO 1/4" RADIUS.
4. EXPANSION JOINTS SHALL EXTEND FROM THE SURFACE TO THE FOUNDATION AND MUST BE AT RIGHT ANGLES TO THE SIDEWALK SURFACE. A 1/2" EXPANSION JOINT SHALL PLACED ACROSS THE WALK EVERY 20'. EXPANSION MATERIAL SHALL ALSO BE PLACED LONGITUDINALLY ALONG ONE SIDE WHEN SIDEWALK IS PLACED BETWEEN CURBS, PAVEMENTS, OR ANY FIXED STRUCTURES.
5. CONCRETE SIDEWALKS SHALL BE CONSTRUCTED IN CONFORMANCE WITH SECTION 705 OF THE STANDARD SPECIFICATIONS MANUAL.

SIDEWALK DETAIL

NO SCALE

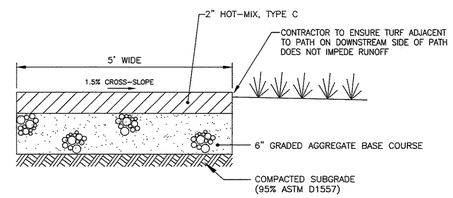

HOT-MIX PATH SECTION

N.T.S.

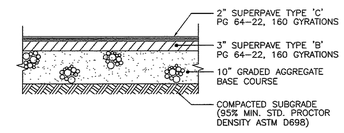

HEAVY DUTY PAVEMENT SECTION

N.T.S.

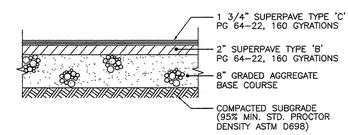

STANDARD PAVEMENT SECTION

N.T.S.

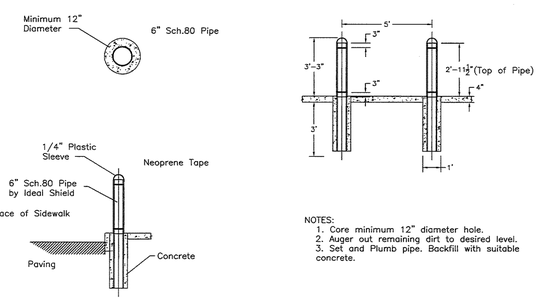

NOTES:
1. Core minimum 12" diameter hole.
2. Auger out remaining dirt to desired level.
3. Set and Plumb pipe. Backfill with suitable concrete.

DIRECT BURIED BOLLARD DETAIL

N.T.S.

Know what's below. Call before you dig.

MISS UTILITY PHONE 1-800-282-8555
PROTECT YOURSELF, GIVE THREE WORKING DAYS NOTICE

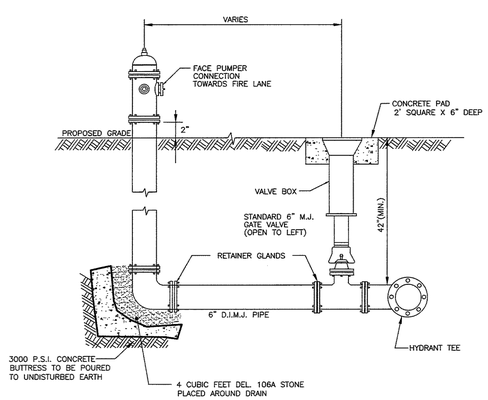

FIRE HYDRANT DETAIL

N.T.S.

(REFER TO ARTESIAN WATER COMPANY STANDARD DETAILS)

NOTES:

1. ALL MATERIAL AND INSTALLATION SHALL CONFORM TO ARTESIAN WATER COMPANY SPECIFICATIONS.
2. DEPTH OF THE PROPOSED WATER MAIN SHALL BE 42" FROM FINISH GRADE TO TOP OF PIPE, INCLUDING SERVICES.
3. DEPTH OF THE PROPOSED WATER MAIN MAY VARY DUE TO EXISTING FACILITIES.
4. EXISTING GRADES ARE NOT TO BE CHANGED.
5. ALL ROADWAY PATCHES SHALL BE STATE SPEC.
6. EXISTING UTILITIES ARE SHOWN IN ACCORDANCE WITH BEST AVAILABLE INFORMATION. IT SHALL BE THE CONTRACTOR'S RESPONSIBILITY TO VERIFY AND ALLOW FOR THEIR LOCATION.
7. THE CONTRACTOR SHALL TAKE ALL NECESSARY PRECAUTIONS TO PROTECT THE EXISTING UTILITIES AND MAINTAIN UNINTERRUPTED SERVICE AND ANY DAMAGE DONE TO THEM DUE TO HIS NEGLIGENCE SHALL BE IMMEDIATELY AND COMPLETELY REPAIRED AT HIS EXPENCE.

New Castle County 1673

ENGINEERING
APPROVAL
Jan 28, 2016
REVIEWED BY
Michael Clendaniel

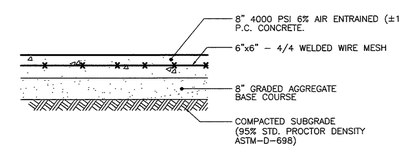

LOADING AREA SECTION

N.T.S.

P:\C1115-15 THE COMMONS AT LITTLE FALLS PARKING GARAGE\DWG\CNST\DETAILS\DETAILS.DWG

© 2016 LANDMARK SCIENCE & ENGINEERING

REVISIONS		CHECKED BY
1. REV. PER NCC ENGINEERING COMMENTS DATED 11-06-15	1-08-16	TCW
2. ISSUED FOR CONSTRUCTION 1-27-2016	1-27-16	

APPLICATION NO. 2015-0556-S
SITE CONSTRUCTION DETAILS
FOR

THE COMMONS AT LITTLE FALLS

CHRISTIANA HUNDRED - NEW CASTLE COUNTY, DELAWARE

OWNER/DEVELOPER
CSC: SPECTRUM LITTLE FALLS, LLC & NWC-SPE LLC
C/O TREFOIL PROPERTIES LP
1690 SUGARTOWN RD., SUITE 240
WAYNE, PA 19446
(215) 855-5100

NEW CASTLE, DE (302) 323-9377
DOVER, DE (302) 734-9597
HAVRE DE GRACE, MD (410) 939-2144

Landmark Science & Engineering
100 WEST COMMONS BOULEVARD, SUITE 301
NEW CASTLE, DELAWARE 19720
PHONE - (302) 323-9377 • FAX - (302) 323-9461
INFO@LANDMARK-SE.COM • WWW.LANDMARK-SE.COM

THIS DRAWING AND THE DESIGN SHOWN ARE THE PROPERTY OF LANDMARK SCIENCE & ENGINEERING AND SHALL NOT BE ALTERED OR COPIED WITHOUT WRITTEN PERMISSION.

THIS DRAWING DOES NOT INCLUDE NECESSARY COMPONENTS FOR CONSTRUCTION SAFETY.

ALL CONSTRUCTION MUST BE DONE IN ACCORDANCE WITH OSHA STANDARDS FOR SAFETY AND HEALTH ACT OF 1970 AND THE RULES AND REGULATIONS THEREUNDER APPURTENANT THERETO.

DRAWN BY: ALL	SCALE: AS NOTED		
DESIGNED BY: TCW/JAN	DATE: 8/26/15		
CHECKED BY: TCW	LAST MODIFIED 1/27/16		
COMM. NO. C1115-15	FILE NO.: XXX		
DRAWING NAME: DETAILS.DWG			

CC-02

SHEET NO. CC-02 of 16

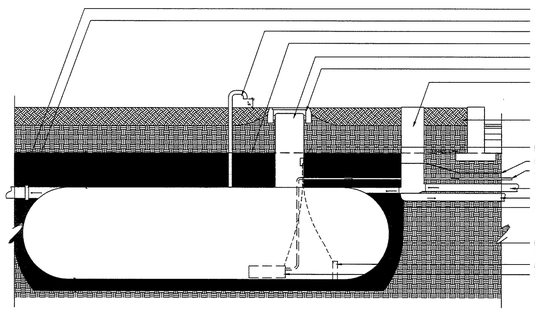

System to provide minimum 40GPM at 70PSI

*Asterisked items to be supplied by Single Source Cistern Manufacturer: Watertronics Skyharvester or approved equal:

Watertronics:
525 E. Industrial Drive
PO Box 530
Hartland, WI 53029

1-262-367-5000
1-800-356-6686

The following additional components will be provided by Single Source Cistern Manufacturer:
-CONTROL PANEL COMPONENTS
-ALARMS
-SENSORS and VALVES
-DISCONNECTS for safety

Wire Schedule
Level Sensor: 18AWG (2) Cond. Shielded
Level Float: 14AQG (2) Cond.
Flow Sensor: 18GAW (2) Cond. Shielded
Solenoid Valve: 14AWG (2) Cond.
Motor: 10AWG (3) Cond. w/Ground

All items shown are for pricing purposes only. Final selection and sizing of components to be confirmed and coordinated by Cistern Manufacturer, MEP and Civil Engineer.

Cistern Detail

Scale: N.T.S.

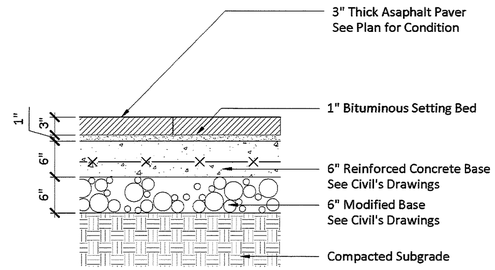

Vehicular Paver on Concrete Base

Scale: N.T.S.

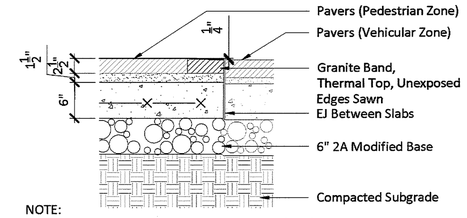

NOTE:
This condition only applies where Snowmelt (Slab) meets Vehicular Pavers, (ADD ALTERNATE) - in lieu of granite curbing.

Flush "Curb" Adjacent to Pavers

Scale: N.T.S.

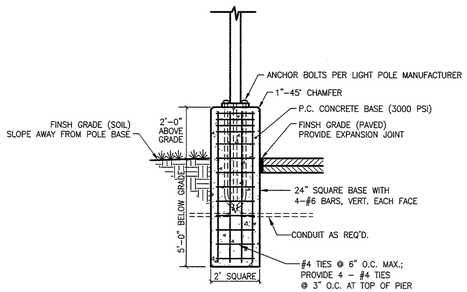

SQUARE LIGHT POLE BASE

N.T.S.

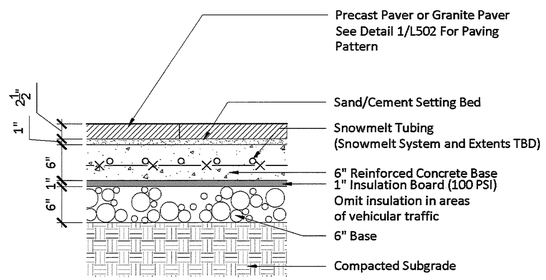

ADD ALTERNATE - In lieu of Dry Laid Pavers in locations indicated on sheet L210

Paver over Slab with Snowmelt

Scale: N.T.S.

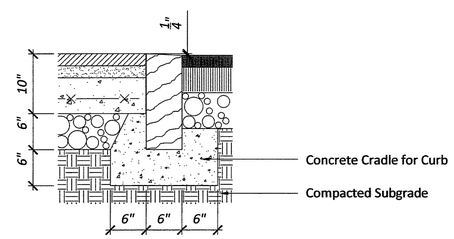

Flush Granite Curb Adjacent to Pavers and Asphalt

Scale: N.T.S.

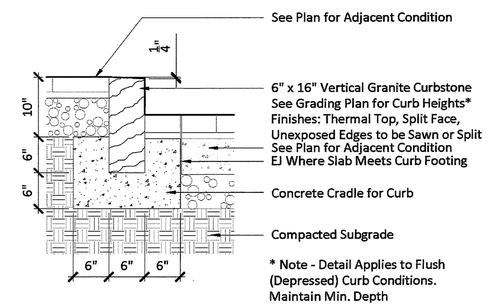

* Note - Detail Applies to Flush (Depressed) Curb Conditions. Maintain Min. Depth

Granite Curb

Scale: N.T.S.

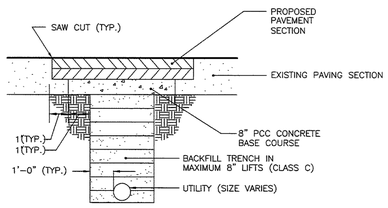

TRENCH PATCH DETAIL

N.T.S.

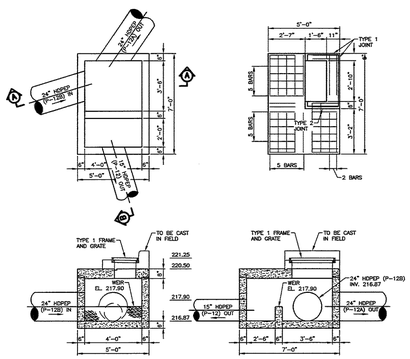

PROPOSED CB #12

SCALE: 1" = 5'

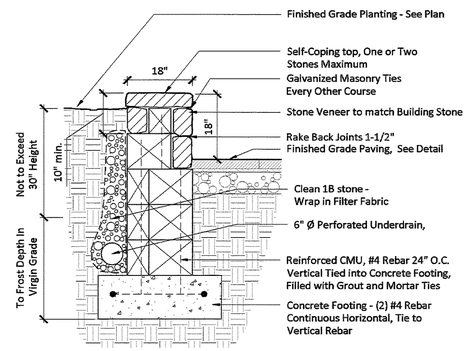

Stone Self-Coping Seat Wall

Scale: N.T.S.

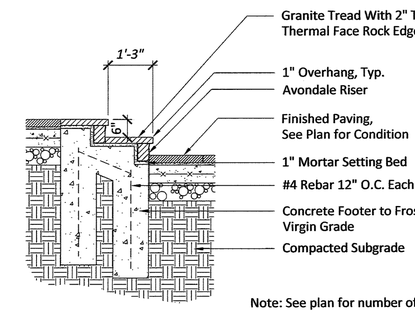

Note: See plan for number of steps

Granite Step And Riser Section

Scale: N.T.S.

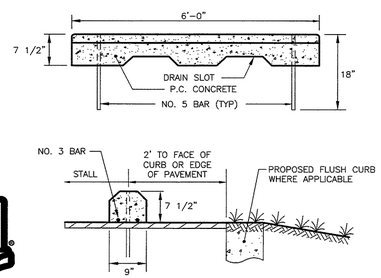

CONCRETE BUMPER BLOCK

N.T.S.

Know what's **below.**
Call before you dig.

MISS UTILITY PHONE 1-800-282-8555
PROTECT YOURSELF, GIVE THREE WORKING DAYS NOTICE

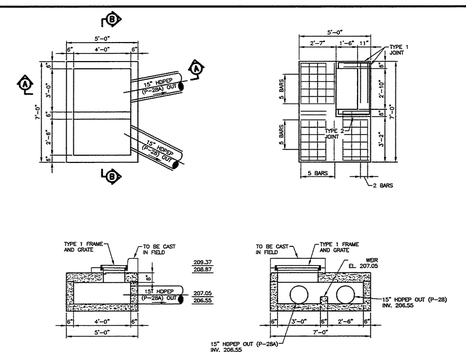

PROPOSED CB #28

SCALE: 1" = 5'

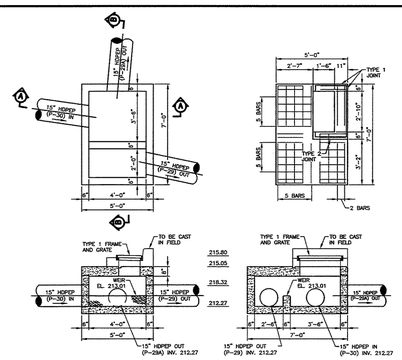

PROPOSED CB #29

SCALE: 1" = 5'

ENGINEERING
APPROVAL
Jan 28, 2016
REVIEWED BY
Michael Clendaniel

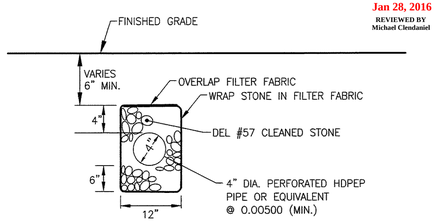

PROPOSED COURTYARD UNDERDRAIN

N.T.S.

REVISIONS		CHECKED
1. REV. PER NCC ENGINEERING COMMENTS DATED 11-06-15	TCW	TCW
2. ADDED LIGHT POLE BASE DETAIL	1-08-16	1-08-16
3. ISSUED FOR CONSTRUCTION 1-27-2016	1-26-16	1-26-16
	1-27-16	1-27-16

APPLICATION NO. 2015-0556-S
SITE CONSTRUCTION DETAILS
FOR
THE COMMONS AT LITTLE FALLS
CHRISTIANA HUNDRED – NEW CASTLE COUNTY, DELAWARE

CSC SPECTRUM LITTLE FALLS, LLC & NWC-SPE LLC
C/O TREFOIL PROPERTIES LP
1680 SUMMIT AVENUE, SUITE 240
LANSDALE, PA 19446
(215) 855-5100

Landmark Science & Engineering
NEW CASTLE, DE (302) 323-9377
DOVER, DE (302) 734-9997
HAVRE DE GRACE, MD (410) 939-2144
100 WEST COMMONS BOULEVARD, SUITE 301
NEW CASTLE, DELAWARE 19720
PHONE - (302) 323-9377 • FAX - (302) 323-9461
INFO@LANDMARK-SE.COM • WWW.LANDMARK-SE.COM

THIS DRAWING AND THE DESIGN SHOWN ARE THE PROPERTY OF LANDMARK SCIENCE AND ENGINEERING AND SHALL NOT BE REPRODUCED OR COPIED WITHOUT WRITTEN PERMISSION.

THIS DRAWING DOES NOT INCLUDE NECESSARY COMPONENTS FOR CONSTRUCTION SAFETY.

ALL CONSTRUCTION MUST BE DONE IN ACCORDANCE WITH OSHA STANDARDS FOR SAFETY AND HEALTH ACT OF 1970 AND THE RULES AND REGULATIONS THERETO APPURTENANT

DRAWN BY: ALL	SCALE: AS NOTED		
DESIGNED BY: TCW/JW	DATE: 8/26/15		
CHECKED BY: TCW	LAST MODIFIED: 1/27/16		
COMM. NO. C1115-15	FILE NO.: XXX		
DRAWING NAME: DETAILS.DWG		SHEET NO. CC-03 of 16	

CC-03

© 2016 LANDMARK SCIENCE & ENGINEERING

P:\C1115-15 THE COMMONS AT LITTLE FALLS PARKING GARAGE\DWG\CONST\DETAILS\DETAILS.DWG

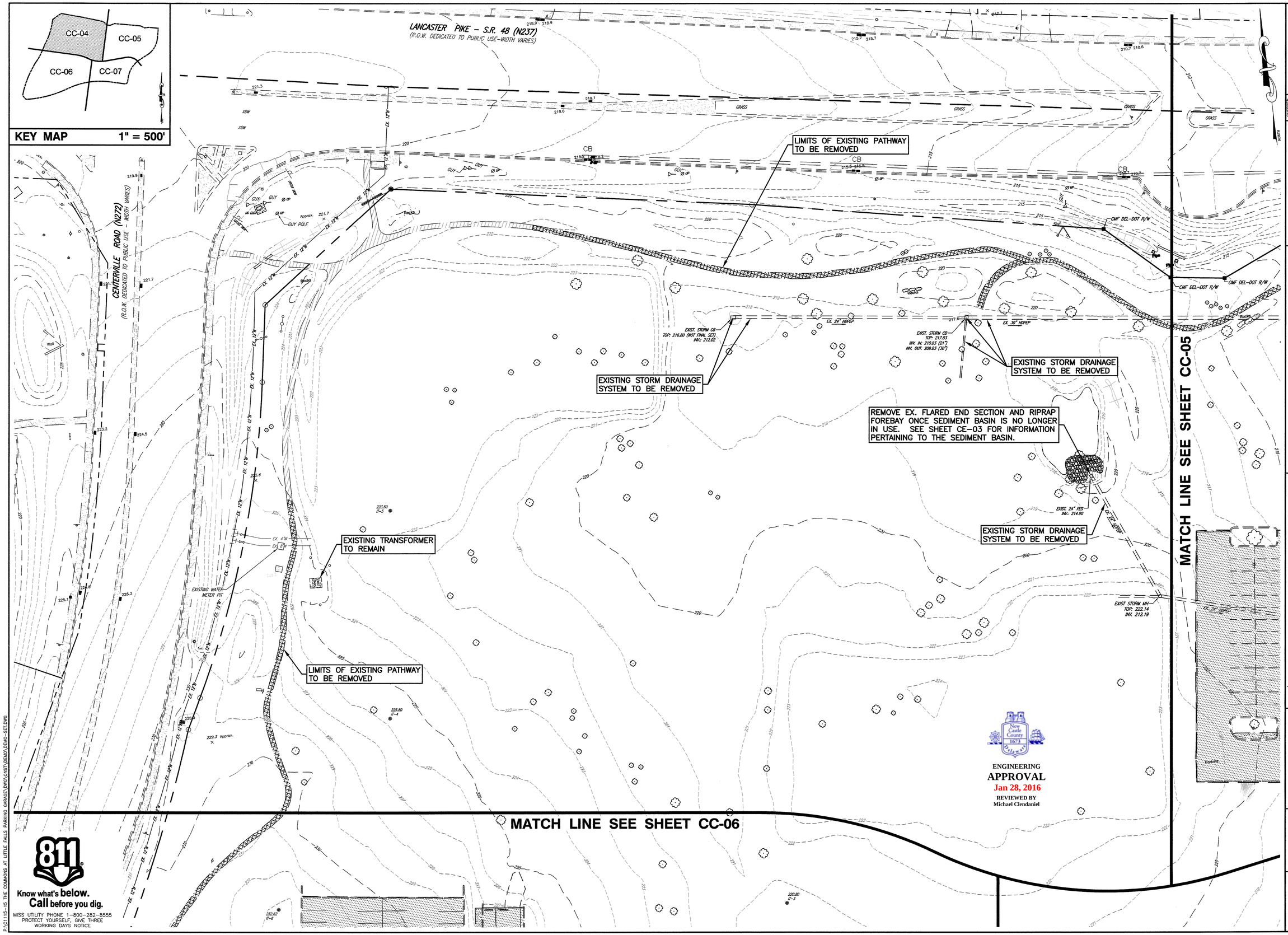

REVISIONS

1. REV. PER NCC ENGINEERING COMMENTS DATED 11-06-15	TCW	1-26-16
2. ISSUED FOR CONSTRUCTION 1-27-2016	TCW	1-27-16

CHECKED

APPLICATION NO. 2015-0556-S
EXISTING CONDITIONS AND DEMOLITION PLAN
FOR
THE COMMONS AT LITTLE FALLS
CHRISTIANA HUNDRED – NEW CASTLE COUNTY, DELAWARE

OWNER
CSC SPECTRUM LITTLE FALLS, LLC & NWC-SPE LLC
TRUSTEE OF THE PROPERTY OF LANDMARK
1690 SUMNEYTOWN PIKE, SUITE 240
LANSDALE, PA 19446
(215) 855-3100

Landmark Science & Engineering
100 WEST COMMONS BOULEVARD, SUITE 301
NEW CASTLE, DELAWARE 19720
PHONE - (302) 323-9077 • FAX - (302) 323-9461
INFO@LANDMARK-SE.COM • WWW.LANDMARK-SE.COM

NEW CASTLE, DE (302) 323-9077
DOVER, DE (302) 734-9597
HAVRE DE GRACE, MD (410) 939-2144

GRAPHIC SCALE 0 15 30 60

THIS DRAWING AND THE DESIGN SHOWN ARE THE EXCLUSIVE PROPERTY OF LANDMARK. THEY MAY NOT BE REPRODUCED AND SHALL NOT BE ALTERED OR REPURPOSED WITHOUT WRITTEN PERMISSION.

THIS DRAWING DOES NOT INCLUDE NECESSARY COMPONENTS FOR CONSTRUCTION SAFETY. CONTRACTOR IS SOLELY RESPONSIBLE FOR COMPLIANCE WITH THE OCCUPATIONAL SAFETY AND HEALTH ACT OF 1970 AND ALL OTHER LAWS AND REGULATIONS THEREUNDER APPLICABLE.

DRAWN BY:	ALL	SCALE:	1"=30'
DESIGNED BY:	TCW/JAV	DATE:	8/26/15
CHECKED BY:	TCW	LAST MODIFIED	1/27/16
COMM. NO.	C1115-15	FILE NO.:	XXX
DRAWING NAME:	DEMO-SET.DWG		

CC-04

SHEET NO. CC-04 of 16

© 2016 LANDMARK SCIENCE & ENGINEERING

P:\C1115-15 THE COMMONS AT LITTLE FALLS PARKING GARAGE\DWG\CONST\DEMO\DEMO-SET.DWG

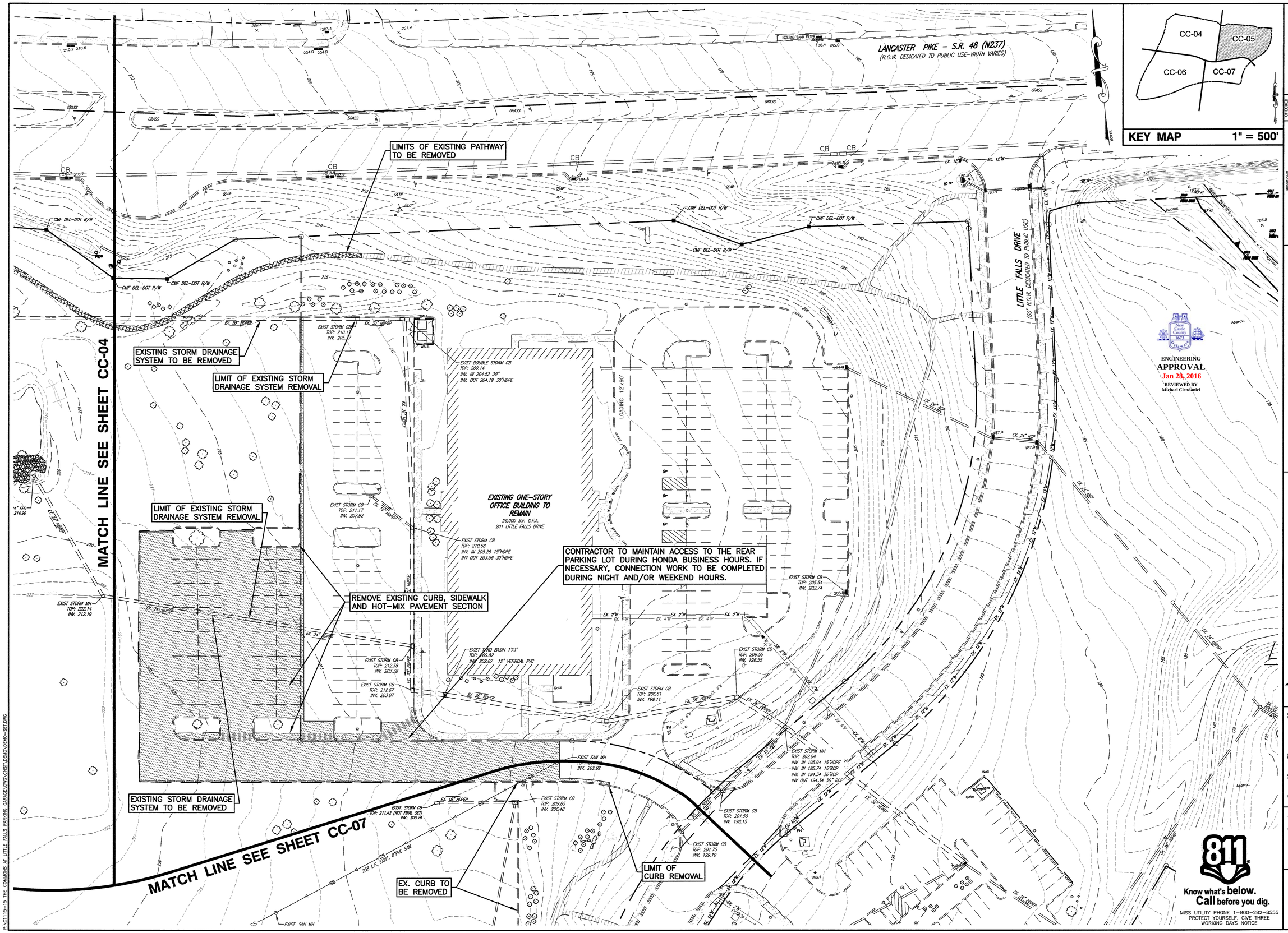

KEY MAP 1" = 500'

ENGINEERING APPROVAL
Jan 28, 2016
REVIEWED BY
Michael Clendaniel

REVISIONS		CHECKED
1. REV. PER NCC ENGINEERING COMMENTS DATED 11-06-15	TCW	11-06-15
2. ISSUED FOR CONSTRUCTION 1-27-2016	TCW	1-27-16

APPLICATION NO. 2015–0556–S
EXISTING CONDITIONS AND DEMOLITION PLAN
FOR
THE COMMONS AT LITTLE FALLS
CHRISTIANA HUNDRED – NEW CASTLE COUNTY, DELAWARE

CSC SPECTRUM LITTLE FALLS, LLC & NWC–SPE LLC
C/O TREFOIL PROPERTIES LP
1680 SUMNEYTOWN PIKE, SUITE 240
LANSDALE, PA 19446
(215) 855–5100

Landmark Science & Engineering
100 WEST COMMONS BOULEVARD, SUITE 301
NEW CASTLE, DELAWARE 19720
PHONE - (302) 323-9377 • FAX - (302) 323-9461
INFO@LANDMARK-SE.COM • WWW.LANDMARK-SE.COM

NEW CASTLE, DE (302) 323-9377
DOVER, DE (302) 734-9599
HAVRE DE GRACE, MD (410) 939-2144

GRAPHIC SCALE 0 15 30 60

THIS DRAWING AND THE DESIGN SHOWN ARE THE SOLE PROPERTY OF LANDMARK SCIENCE AND ENGINEERING AND SHALL NOT BE REPRODUCED, ASSIGNED OR COPIED WITHOUT WRITTEN PERMISSION.

THIS DRAWING DOES NOT INCLUDE NECESSARY COMPONENTS FOR CONSTRUCTION SAFETY.

ALL CONSTRUCTION MUST BE DONE IN ACCORDANCE WITH OSHA CONSTRUCTION SAFETY AND HEALTH ACT OF 1970 AND THE RULES AND REGULATIONS THERETO APPURTENANT

DRAWN BY: ALL	SCALE: 1"=30'		
DESIGNED BY: TCW/JAW	DATE: 8/26/15	LAST MODIFIED	1/27/16
CHECKED BY: TCW			
COMM. NO. C1115-15	FILE NO.: XXX		
DRAWING NAME: DEMO-SET.DWG			

CC-05 SHEET NO. CC-05 of 16

© 2016 LANDMARK SCIENCE & ENGINEERING

P:\C1115-15 THE COMMONS AT LITTLE FALLS PARKING GARAGE\DWG\CNST\DEMO\DEMO-SET.DWG

MATCH LINE SEE SHEET CC-04

ENGINEERING APPROVAL
Jan 28, 2016
REVIEWED BY
Michael Clendaniel

LIMITS OF EXISTING PATHWAY TO BE REMOVED

REMOVE EXISTING CURB, SIDEWALK AND HOT-MIX PAVEMENT SECTION

LIMIT OF EXISTING STORM DRAINAGE SYSTEM REMOVAL. EXISTING HOLE IN MANHOLE TO BE BRICKED UP AND SEALED, CONTRACTOR TO ENSURE WATER TIGHT SEAL.

EXISTING STORM DRAINAGE SYSTEM TO BE REMOVED

EXISTING CURB IN GRASS AREA TO REMAIN

EXISTING STORM DRAINAGE SYSTEM TO BE REMOVED

LIMIT OF EXISTING STORM DRAINAGE SYSTEM REMOVAL. REMOVE EXISTING PIPE TO BACK OF SIDEWALK AND CAP AND SEAL,CONTRACTOR TO ENSURE WATER TIGHT SEAL

LIMIT OF EX. CURB TO BE REMOVED, REMOVE TOP OF EX. CATCH BASINS AND CONVERT TO LAWN INLET

EXISTING CURB TO BE REMOVED UPON REMOVAL OF TEMPORARY PARKING AREA

EXISTING SIDEWALK TO BE REMOVED PRIOR TO GARAGE CONSTRUCTION AND REPLACED UPON GARAGE COMPLETION

LIMITS OF EXISTING PATHWAY TO BE REMOVED

EXISTING CURB IN GRASS AREA TO REMAIN

LIMIT OF EX. CURB TO BE REMOVED, REMOVE TOP OF EX. CATCH BASIN AND CONVERT TO LAWN INLET

EXISTING ONE-STORY RESTAURANT TO REMAIN
6,000 S.F. G.F.A.
301 LITTLE FALLS DRIVE

COVERED PATIO

FREEZER/COOLER PAD

EXISTING WATER METER PIT

RED CLAY DRIVE EAST
(100' R.O.W. DEDICATED TO PUBLIC USE)

EXIST. SAN MH TOP: 220.41 INV. 200.41

EXIST. STORM CB TOP: 219.30 INV. 206.83

273 L.F. EXIST. 8"PVC SAN.

EXIST. STORM MH TOP: 219.60 INV. 207.46

218 L.F. EXIST. 8"PVC SAN.

EXIST. SAN MH TOP: 218.57 INV. 199.38 PLUG STUBBED AT 207.40

EXIST. STORM CB TOP: 217.43 INV. 207.93

EXIST. STORM CB TOP: 217.47 INV. 207.90

190 L.F. EXIST. 8"PVC SAN.

EXIST. STORM CB TOP: 217.00 INV. 214.22

EXIST. SAN MH TOP: 214.65 INV. IN (INSIDE DROP) 205.47 INV. OUT 198.63

EXIST. SAN CO TOP: 215.09

EXIST. STORM CB TOP: 216.22 INV IN 211.15 15"HDPE INV. OUT 208.85 24"HDPE

EXIST. STORM CB TOP: 212.43 INV. 209.01

EXIST. STORM CB TOP: 216.81 INV. 213.87

EXIST. STORM CB TOP: 212.97 INV. 209.40

122 L.F. EXIST. 8"PVC SAN.

EXIST. SAN MH TOP: 207.64 INV. 197.25

MATCH LINE SEE SHEET CC-07

811 Know what's below. Call before you dig.
MISS UTILITY PHONE 1-800-282-8555
PROTECT YOURSELF, GIVE THREE WORKING DAYS NOTICE

KEY MAP 1" = 500'

CC-04 CC-05 CC-06 CC-07

REVISIONS

		CHECKED
1. REV. PER NCC ENGINEERING COMMENTS DATED 11-06-15	TCW	1-06-16
2. ISSUED FOR CONSTRUCTION 1-27-2016	TCW	1-27-16

APPLICATION NO. 2015-0556-S
EXISTING CONDITIONS AND DEMOLTION PLAN
FOR
THE COMMONS AT LITTLE FALLS
CHRISTIANA HUNDRED – NEW CASTLE COUNTY, DELAWARE
OWNER
CSC SPECTRUM LITTLE FALLS, LLC & NWC-SPE LLC
C/O TREFOIL PROPERTIES LP
1650 SUMNEYTOWN PIKE, SUITE 240
LANSDALE, PA 19446
(215) 855-3100

Landmark Science & Engineering
NEW CASTLE, DE (302) 323-9377
DOVER, DE (302) 734-0597
HAVRE DE GRACE, MD (410) 939-2454
100 WEST COMMONS BOULEVARD, SUITE 301
NEW CASTLE, DELAWARE 19720
PHONE - (302) 323-9377 • FAX - (302) 323-9461
INFO@LANDMARK-SE.COM • WWW.LANDMARK-SE.COM

0 15 30 60
GRAPHIC SCALE

THIS DRAWING AND THE DESIGN SHOWN ARE THE PROPERTY OF LANDMARK SCIENCE AND ENGINEERING, AND SHALL NOT BE REPRODUCED OR COPIED WITHOUT WRITTEN PERMISSION.

THIS DRAWING DOES NOT INCLUDE NECESSARY COMPONENTS FOR CONSTRUCTION SAFETY.

ALL CONSTRUCTION MUST BE DONE IN ACCORDANCE WITH OSHA STANDARDS FOR SAFETY AND HEALTH ACT OF 1970 AND THE RULES AND REGULATIONS THERE APPURTENANT.

DRAWN BY: ALL	SCALE: 1"=30'		
DESIGNED BY: TCW/JAV	DATE: 8/25/15		
CHECKED BY: TCW	LAST MODIFIED 1/27/16		
COMM. NO. C1115-15	FILE NO.: XXX		
DRAWING NAME: DEMO-SET.DWG			

CC-06

SHEET NO. CC-06 of 16

© 2016 LANDMARK SCIENCE & ENGINEERING

P:\C1115-15 THE COMMONS AT LITTLE FALLS PARKING GARAGE\DWG\CNST\DEMO\DEMO-SET.DWG

ENGINEERING
APPROVAL
Jan 28, 2016
REVIEWED BY
Michael Clendaniel

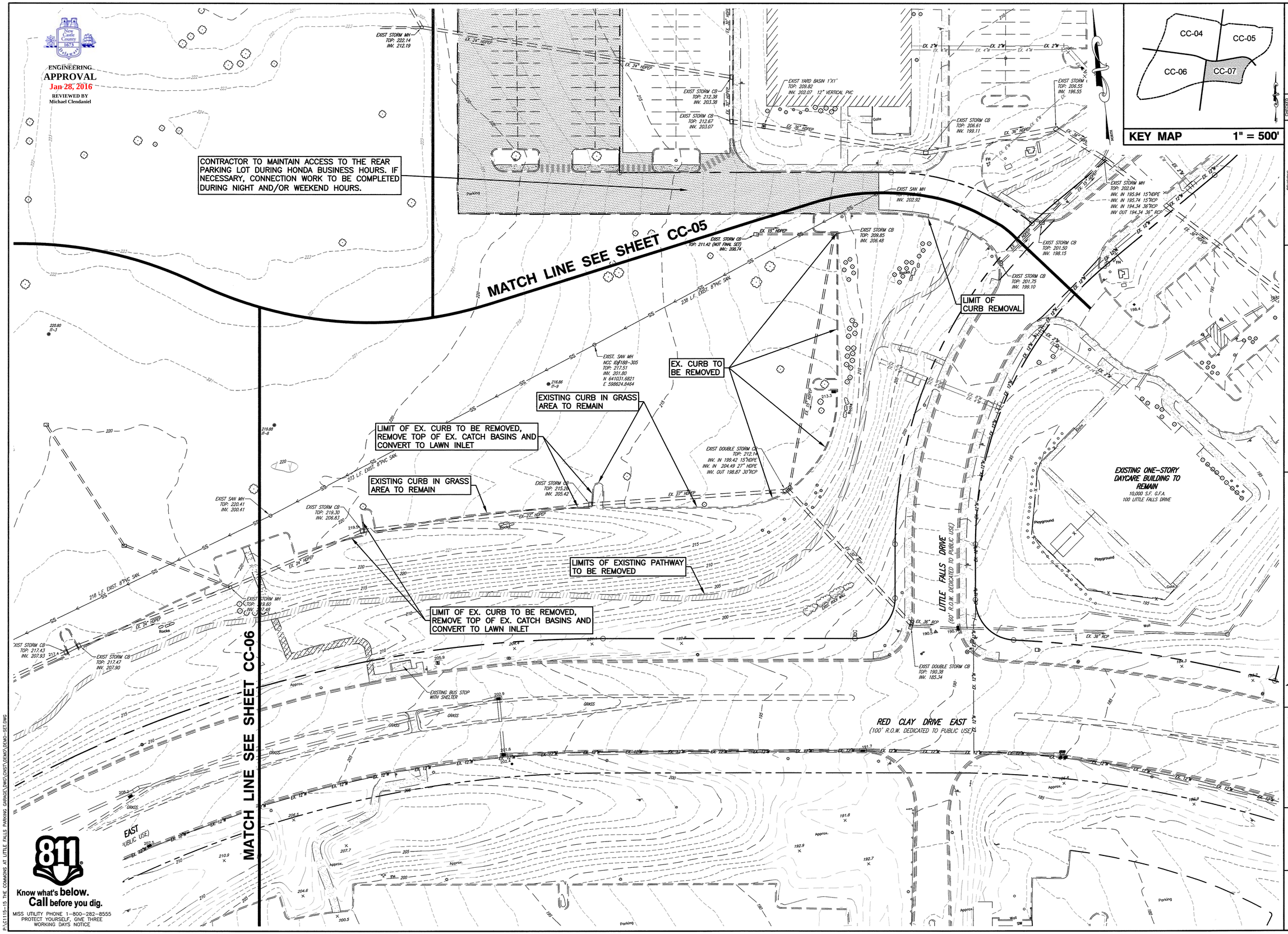

KEY MAP 1" = 500'

Know what's below. Call before you dig.
MISS UTILITY PHONE 1-800-282-8555
PROTECT YOURSELF, GIVE THREE WORKING DAYS NOTICE

GRAPHIC SCALE 0 15 30 60

THIS DRAWING AND THE DESIGN SHOWN ARE THE PROPERTY OF LANDMARK SCIENCE AND ENGINEERING AND SHALL NOT BE REPRODUCED OR COPIED WITHOUT WRITTEN PERMISSION.

THIS DRAWING DOES NOT INCLUDE NECESSARY COMPONENTS FOR CONSTRUCTION SAFETY.

ALL CONSTRUCTION MUST BE DONE IN ACCORDANCE WITH OSHA STANDARDS FOR SAFETY AND HEALTH ACT OF 1970 AND THE RULES AND REGULATIONS THEREIN APPURTENANT.

DRAWN BY: ALL	SCALE: 1"=30'	DESIGNED BY: TCW/JAW	DATE: 8/26/15
CHECKED BY: TCW	LAST MODIFIED 1/27/16	COMM. NO. C1115-15	FILE NO.: XXX
DRAWING NAME: DEMO-SET.DWG			

CC-07

SHEET NO. CC-07 of 16

© 2016 LANDMARK SCIENCE & ENGINEERING

REVISIONS	BY	DATE
1. REV. PER NCC ENGINEERING COMMENTS DATED 11-06-15		1-08-16
2. ISSUED FOR CONSTRUCTION 1-27-2016		1-27-16

CHECKED

APPLICATION NO. 2015-0556-S
EXISTING CONDITIONS AND DEMOLITION PLAN
FOR
THE COMMONS AT LITTLE FALLS
CHRISTIANA HUNDRED - NEW CASTLE COUNTY, DELAWARE

CSC SPECTRUM LITTLE FALLS, LLC & INVC-SPE LLC
C/O TREFOIL PROPERTIES LP
1690 SUMNEYTOWN PIKE, SUITE 240
LANSDALE, PA 19446
(215) 855-5100

NEW CASTLE, DE (302) 323-9377
DOVER, DE (302) 734-9997
HAVRE DE GRACE, MD (410) 939-2144

Landmark Science & Engineering
100 WEST COMMONS BOULEVARD, SUITE 301
NEW CASTLE, DELAWARE 19720
PHONE - (302) 323-9377 • FAX - (302) 323-9461
INFO@LANDMARK-SE.COM • WWW.LANDMARK-SE.COM

P:\C1115-15 THE COMMONS AT LITTLE FALLS PARKING GARAGE\DWG\CNST\DEMO\DEMO-SET.DWG

STORM DRAIN PIPE SCHEDULE

NAME	DESCRIPTION							INVERT IN	INVERT OUT
	FROM	TO	SIZE	TYPE	LENGTH	CLASS	SLOPE (FT./FT.)		
P-17	OS #2	OS #1	24"	HDPEP	154	---	0.01013	216.48	214.92
P-18	SD MH #18	OS #2	24"	HDPEP	113	---	0.01000	217.61	216.48
P-18A	MH #18A	MH #18	24"	HDPEP	19	---	0.02105	219.90	219.50
P-19	CB #19	SD MH#18A	18"	HDPEP	40	---	0.00750	219.30	219.0
P-20	SD MH #20	CB #19	15"	HDPEP	76	---	0.00474	219.66	219.30
P-21	CB #21	SD MH #20	15"	HDPEP	85	---	0.00459	220.05	219.66
P-23	CB #23	FES #3	18"	HDPEP	41	---	0.00537	216.72	216.50
P-24	SD MH #24	CB #23	18"	HDPEP	38	---	0.00500	216.91	216.72
P-25	CB #25	SD MH #24	18"	HDPEP	90	---	0.00500	217.36	216.91
P-36	SD MH #38	SD MH#38A	15"	HDPEP	221	---	0.00344	206.82	206.06
P-36A	SD MH#38A	EX CB	15"	HDPEP	79	---	0.00354	206.05	205.77
P-37	CB #39	SD MH #38	15"	HDPEP	16	---	0.00375	206.88	206.82
P-38	CB #40	SD MH #38	15"	HDPEP	39	---	0.00359	206.96	206.82
P-39	CB #41	CB #39	15"	HDPEP	95	---	0.00368	207.23	206.88
P-45	CB #47	CB #46	18"	HDPEP	109	---	0.01000	210.46	209.37
P-47	SD MH #49	SD MH #48	15"	HDPEP	269	---	0.00506	208.20	206.84
P-48	SD MH #50	SD MH #49	15"	HDPEP	83	---	0.03373	211.00	208.20
P-49	CISTERN	SD MH #50	15"	HDPEP	70	---	0.01186	211.83	211.00

STORM DRAIN STRUCTURE SCHEDULE

NAME	DESCRIPTION			T.G. ELEV.	INVERT IN	INVERT IN	INVERT IN	INVERT OUT	PIPE ANGLE IN	PIPE ANGLE OUT
	BOX SIZE	TOP TYPE	GRATE							
SD MH #18	48" X 48"	MH	STD.	224.40	219.50	---	---	217.61	0°	9°
SD MH#18A	48" X 48"	MH	STD.	224.00	219.00	---	219.0(ST)	219.9(P18A)	---	---
SD MH #19	48" X 48"	MH	STD.	224.00	219.00	---	---	219.00	---	---
SD MH #20	48" X 48"	MH	STD.	224.50	219.66	---	---	219.66	9°	10°
SD MH #24	48" X 48"	MH	STD.	223.00	216.91	---	---	216.91	45°	0°
SD MH #38	48" X 48"	MH	STD.	210.25	206.82 (P-38)	206.82 (P-37)	---	206.82	12°, 0°	1°
SD MH #49	48" X 48"	MH	STD.	215.50	208.20	---	---	208.20	28°	0°
SD MH #50	48" X 48"	MH	STD.	223.20	211.00	---	---	211.00	0°	28°
CB #19	48" X 30"	C	STD.	223.30	219.30	---	---	219.30	10°	0°
CB #21	48" X 30"	C	STD.	223.30	---	---	---	220.05	---	9°
CB #23	48" X 30"	C	TYPE 1	220.90	216.72	---	---	216.72	0°	23°, 30°
CB #25	48" X 30"	C	TYPE 1	225.00	---	---	---	217.36	---	0°
CB #39	48" X 30"	C	TYPE 1	210.10	206.88	---	---	206.88	5°	0°
CB #40	48" X 30"	C	TYPE 1	209.90	---	---	---	206.96	---	12°
CB #41	48" X 30"	A	TYPE 1	213.50	---	---	---	207.23	---	5°
CB #47	48" X 30"	C	TYPE 1	214.70	---	---	---	210.46	---	0°
OS #2	48" X 30"	A	TRASH RACK*	224.55	216.48	---	---	216.48	9°	0°
FES#3	---	FES	---	217.5	---	---	---	216.5	0°	---

*SEE TRASH RACK DETAIL ON SHEET CE-19.

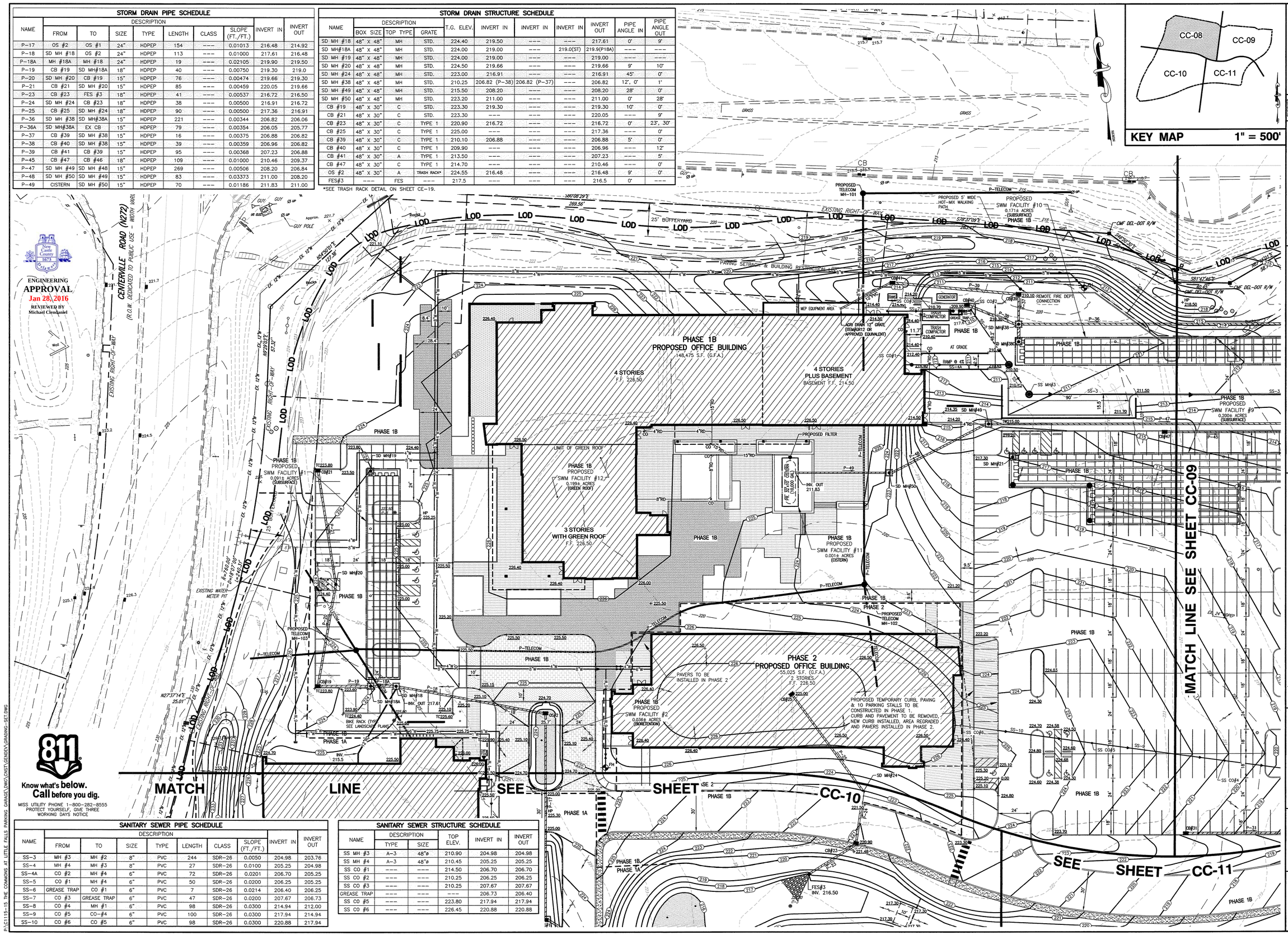

SANITARY SEWER PIPE SCHEDULE

NAME	DESCRIPTION							INVERT IN	INVERT OUT
	FROM	TO	SIZE	TYPE	LENGTH	CLASS	SLOPE (FT./FT.)		
SS-3	MH #3	MH #2	8"	PVC	244	SDR-26	0.0050	204.98	203.76
SS-4	MH #4	MH #3	8"	PVC	27	SDR-26	0.0100	205.25	204.98
SS-4A	CO #2	MH #4	6"	PVC	72	SDR-26	0.0201	206.70	205.25
SS-5	CO #1	MH #4	6"	PVC	50	SDR-26	0.0200	206.25	205.25
SS-6	GREASE TRAP	CO #1	6"	PVC	7	SDR-26	0.0214	206.40	206.25
SS-7	CO #3	GREASE TRAP	6"	PVC	47	SDR-26	0.0200	207.67	206.73
SS-8	CO #4	MH #1	6"	PVC	98	SDR-26	0.0300	214.94	212.00
SS-9	CO #5	CO-#4	6"	PVC	100	SDR-26	0.0300	217.94	214.94
SS-10	CO #6	CO #5	6"	PVC	98	SDR-26	0.0300	220.88	217.94

SANITARY SEWER STRUCTURE SCHEDULE

NAME	DESCRIPTION		TOP ELEV.	INVERT IN	INVERT OUT
	TYPE	SIZE			
SS MH #3	A-3	48"ø	210.90	204.98	204.98
SS MH #4	A-3	48"ø	210.45	205.25	205.25
SS CO #1	---	---	214.50	206.70	206.70
SS CO #2	---	---	210.25	206.25	206.25
SS CO #3	---	---	210.25	207.67	207.67
GREASE TRAP	---	---	---	206.73	206.40
SS CO #5	---	---	223.80	217.94	217.94
SS CO #6	---	---	226.45	220.88	220.88

REVISIONS

1. REV. PER NCC REVIEW COMMENTS DATED 11-06-15 — CHECKED 11-13-15 TCW
2. REV. PER NCC REVIEW COMMENTS DATED 1-19-16 — CHECKED 1-19-16 TCW
3. ISSUED FOR CONSTRUCTION 1-27-2016 — CHECKED 1-27-16 TCW

APPLICATION NO. 2015-0556-S
LINES AND GRADES PLAN
FOR

THE COMMONS AT LITTLE FALLS

CHRISTIANA HUNDRED - NEW CASTLE COUNTY, DELAWARE

OWNER
CSC SPECTRUM LITTLE FALLS, LLC & NWC-SPE LLC
C/O SPECTRUM DEVELOPMENT GROUP
1890 SUMNEYTOWN PIKE, SUITE 240
LANSDALE, PA 19446
(215) 855-5100

Landmark Science & Engineering
100 WEST COMMONS BOULEVARD, SUITE 301
NEW CASTLE, DELAWARE 19720
PHONE - (302) 323-9377 • FAX - (302) 323-9461
INFO@LANDMARK-SE.COM • WWW.LANDMARK-SE.COM
NEW CASTLE, DE (302) 323-9377
DOVER, DE (302) 734-9597
HAVRE DE GRACE, MD (410) 939-2144

GRAPHIC SCALE 0 15 30 60

THIS DRAWING AND THE DESIGN SHOWN ARE THE PROPERTY OF LANDMARK SCIENCE AND ENGINEERING AND SHALL NOT BE REPRODUCED, COPIED, OR USED WITHOUT WRITTEN PERMISSION.

THIS DRAWING DOES NOT INCLUDE NECESSARY COMPONENTS FOR CONSTRUCTION SAFETY.

CONTRACTOR IS RESPONSIBLE FOR COMPLIANCE WITH THE OCCUPATIONAL SAFETY AND HEALTH ACT (OSHA) STANDARDS, RULES AND REGULATIONS IN FIELD AND THE WALLS

DRAWN BY:	ALL	SCALE:	1"=30'
DESIGNED BY:	TCW/JMV	DATE:	8/26/15
CHECKED BY:	TCW	LAST MODIFIED	1/27/16
COMM. NO.	C1115-15	FILE NO.:	XXX
DRAWING NAME:	GRADING-SET.DWG		

CC-08 SHEET NO. CC-08 of 16

© 2016 LANDMARK SCIENCE & ENGINEERING

P:\C1115-15 THE COMMONS AT LITTLE FALLS PARKING GARAGE\DWG\CNST\GENDEV\GRADING-SET.DWG

SANITARY SEWER PIPE SCHEDULE

NAME	DESCRIPTION							INVERT IN	INVERT OUT
	FROM	TO	SIZE	TYPE	LENGTH	CLASS	SLOPE (FT./FT.)		
SS-1	MH #1	EX. MH	8"	PVC	105	SDR-26	0.0050	202.33	201.80
SS-2	MH #2	MH #1	8"	PVC	285	SDR-26	0.0050	203.76	202.33
SS-3	MH #3	MH #2	8"	PVC	244	SDR-26	0.0050	204.98	203.76
SS-8	CO #4	MH #1	6"	PVC	98	SDR-26	0.0300	214.94	212.00
SS-9	CO #5	CO-#4	6"	PVC	100	SDR-26	0.0300	217.94	214.94

SANITARY SEWER STRUCTURE SCHEDULE

NAME	DESCRIPTION		TOP ELEV.	INVERT IN	INVERT IN	INVERT OUT
	TYPE	SIZE				
MH #1	INSIDE DROP	60"ø	217.60	212.00 (SS-8)	202.33 (SS-2)	202.33
MH #2	A-2	48"ø	212.70	203.76	---	203.76
CO #4	---	---	220.95	214.94	---	214.94
CO #5	---	---	223.80	217.94	---	217.94

ENGINEERING
APPROVAL
Jan 28, 2016
REVIEWED BY
Michael Clendaniel

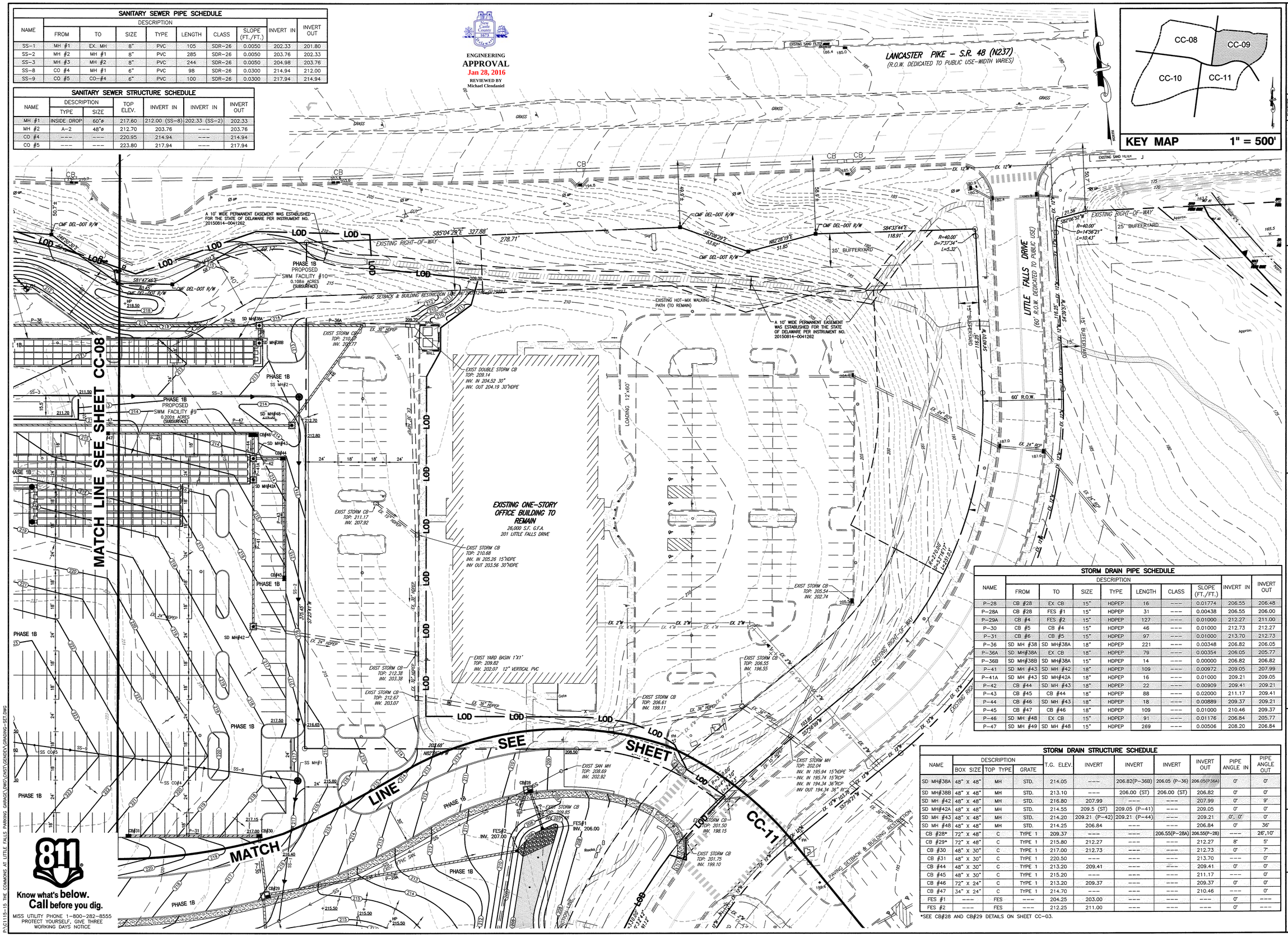

STORM DRAIN PIPE SCHEDULE

NAME	DESCRIPTION							INVERT IN	INVERT OUT
	FROM	TO	SIZE	TYPE	LENGTH	CLASS	SLOPE (FT./FT.)		
P-28	CB #28	EX CB	15"	HDPEP	16	---	0.01774	206.55	206.48
P-28A	CB #28	FES #1	15"	HDPEP	31	---	0.00438	206.55	206.00
P-29A	CB #4	FES #2	15"	HDPEP	127	---	0.01000	212.27	211.00
P-30	CB #5	CB #4	15"	HDPEP	46	---	0.01000	212.73	212.27
P-31	CB #6	CB #5	15"	HDPEP	97	---	0.01000	213.70	212.73
P-36	SD MH #38	SD MH#38A	18"	HDPEP	221	---	0.00348	206.82	206.05
P-36A	SD MH#38A	EX CB	18"	HDPEP	79	---	0.00354	206.05	205.77
P-36B	SD MH#38B	SD MH#38A	15"	HDPEP	14	---	0.00000	206.82	206.82
P-41	SD MH #43	SD MH #42	18"	HDPEP	109	---	0.00972	209.05	207.99
P-41A	SD MH #43	SD MH#42A	18"	HDPEP	16	---	0.01000	209.21	209.05
P-42	CB #44	SD MH #43	18"	HDPEP	22	---	0.00909	209.41	209.21
P-43	CB #45	CB #44	18"	HDPEP	88	---	0.02000	211.17	209.41
P-44	CB #46	SD MH #43	18"	HDPEP	18	---	0.00889	209.37	209.21
P-45	CB #47	CB #46	18"	HDPEP	109	---	0.01000	210.46	209.37
P-46	SD MH #48	EX CB	15"	HDPEP	91	---	0.01176	206.84	205.77
P-47	SD MH #49	SD MH #48	15"	HDPEP	269	---	0.00506	208.20	206.84

STORM DRAIN STRUCTURE SCHEDULE

NAME	DESCRIPTION			T.G. ELEV.	INVERT	INVERT	INVERT	INVERT OUT	PIPE ANGLE IN	PIPE ANGLE OUT
	BOX SIZE	TOP TYPE	GRATE							
SD MH#38A	48" X 48"	MH	STD.	214.05	---	206.82(P-36B)	206.05 (P-36)	206.05(P36A)	0°	0°
SD MH#38B	48" X 48"	MH	STD.	213.10	---	206.00 (ST)	206.00 (ST)	206.82	0°	0°
SD MH #42	48" X 48"	MH	STD.	216.80	207.99	---	---	207.99	0°	9°
SD MH#42A	48" X 48"	MH	STD.	214.55	209.5 (ST)	209.05 (P-41)	---	209.05	0°	0°
SD MH #43	48" X 48"	MH	STD.	214.20	209.21 (P-42)	209.21 (P-44)	---	209.21	0°, 0°	0°
SD MH #48	48" X 48"	MH	STD.	214.25	206.84	---	---	206.84	0°	36°
CB #28*	72" X 48"	C	TYPE 1	209.37	---	---	206.55(P-28A)	206.55(P-28)	---	26',10°
CB #29*	72" X 48"	C	TYPE 1	215.80	212.27	---	---	212.27	8°	5°
CB #30	48" X 30"	C	TYPE 1	217.00	212.73	---	---	212.73	0°	7°
CB #31	48" X 30"	C	TYPE 1	220.50	---	---	---	213.70	---	0°
CB #44	48" X 30"	C	TYPE 1	213.20	209.41	---	---	209.41	0°	0°
CB #45	48" X 30"	C	TYPE 1	215.20	---	---	---	211.17	---	0°
CB #46	72" X 24"	C	TYPE 1	213.20	209.37	---	---	209.37	0°	0°
CB #47	34" X 24"	C	TYPE 1	214.70	---	---	---	210.46	---	0°
FES #1	---	FES	---	204.25	203.00	---	---	---	0°	---
FES #2	---	FES	---	212.25	211.00	---	---	---	0°	---

*SEE CB#28 AND CB#29 DETAILS ON SHEET CC-03.

REVISIONS
1. REV. PER NCC REVIEW COMMENTS DATED 11-06-15 — CHECKED TCW 11-13-15
2. REV. PER NCC REVIEW COMMENTS DATED 1-19-16 — CHECKED TCW 1-19-16
3. ISSUED FOR CONSTRUCTION 1-27-2016 — CHECKED TCW 1-27-16

APPLICATION NO. 2015-0556-S
LINES AND GRADES PLAN
FOR
THE COMMONS AT LITTLE FALLS
CHRISTIANA HUNDRED - NEW CASTLE COUNTY, DELAWARE

OWNER:
CSC SPECTRUM LITTLE FALLS, LLC & NWC-SPE LLC
(WILMINGTON SAVINGS FUND SOCIETY)
1880 SUMNEYTOWN PIKE, SUITE 240
LANSDALE, PA 19446
(215) 855-5100

Landmark Science & Engineering
100 WEST COMMONS BOULEVARD, SUITE 301
NEW CASTLE, DELAWARE 19720
PHONE - (302) 323-9577 • FAX - (302) 323-9461
INFO@LANDMARK-SE.COM • WWW.LANDMARK-SE.COM
NEW CASTLE, DE (302) 323-9577
DOVER, DE (302) 734-9597
HAVRE DE GRACE, MD (410) 939-2144

GRAPHIC SCALE 0 15 30 60

THE DRAWING AND THE DESIGN SHOWN ARE THE PROPERTY OF LANDMARK SCIENCE AND ENGINEERING AND SHALL NOT BE REPRODUCED, COPIED OR USED WITHOUT WRITTEN PERMISSION.

THIS DRAWING DOES NOT INCLUDE NECESSARY COMPONENTS FOR CONSTRUCTION SAFETY. ALL CONSTRUCTION MUST BE PERFORMED IN ACCORDANCE WITH THE OSHA SAFETY AND HEALTH ACT OF 1970 AND THE RULES AND REGULATIONS OF THE OSHA AGENCY.

DRAWING BY: ALL | SCALE: 1"=30'
DESIGNED BY: TCW/JAW | DATE: 8/26/15
CHECKED BY: TCW | LAST MODIFIED 1/27/16
COMM. NO. C1115-15 | FILE NO.: XXX
DRAWING NAME: GRADING-SET.DWG

CC-09

SHEET NO. CC-09 of 16

© 2016 LANDMARK SCIENCE & ENGINEERING

P:\C1115-15 THE COMMONS AT LITTLE FALLS PARKING GARAGE\DWG\CIVIL\GENDEV\GRADING-SET.DWG

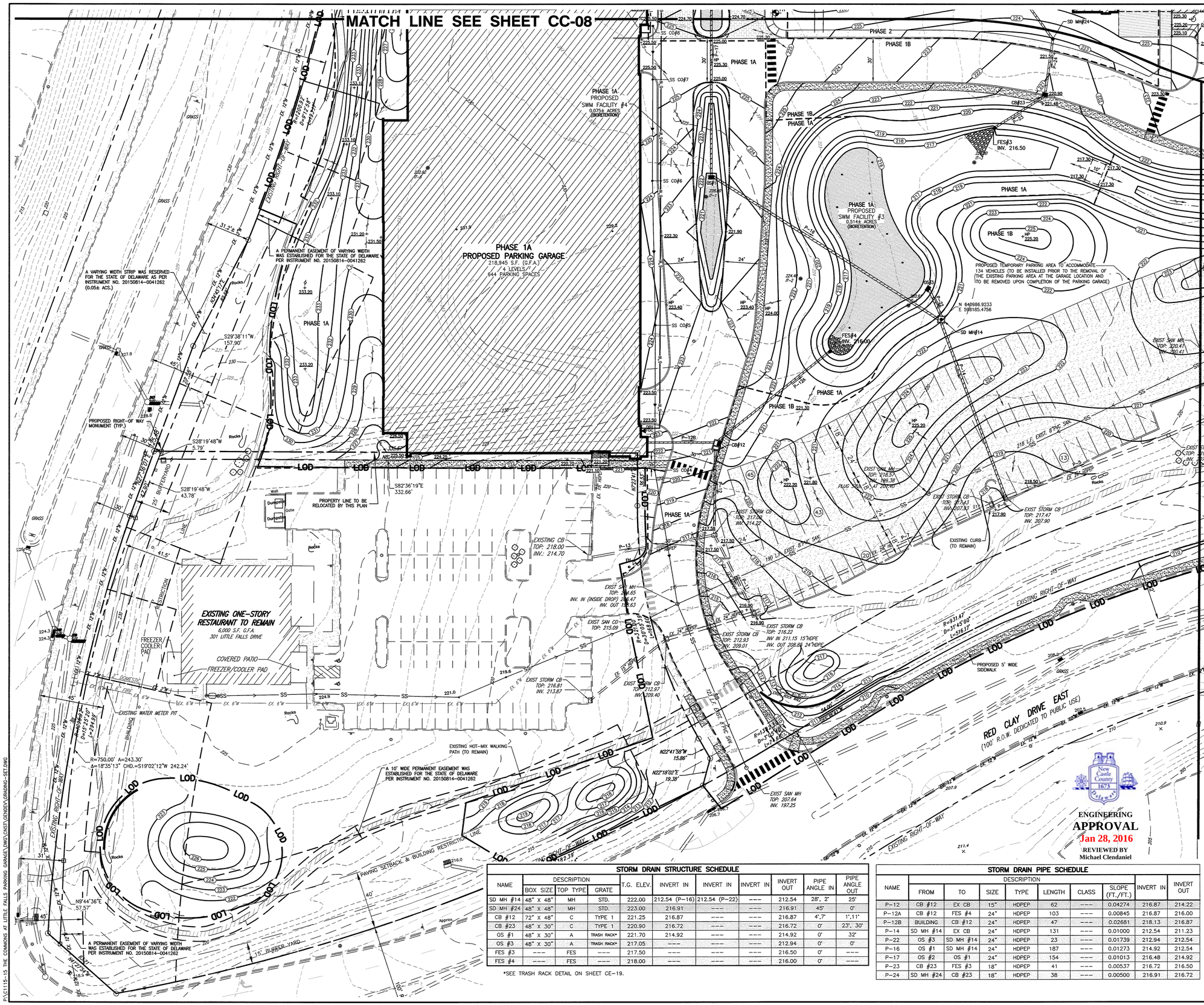

STORM DRAIN STRUCTURE SCHEDULE

NAME	DESCRIPTION			T.G. ELEV.	INVERT IN	INVERT IN	INVERT IN	INVERT OUT	PIPE ANGLE IN	PIPE ANGLE OUT
	BOX SIZE	TOP TYPE	GRATE							
SD MH #14	48" X 48"	MH	STD.	222.00	212.54 (P-16)	212.54 (P-22)	---	212.54	28°, 2°	25°
SD MH #24	48" X 48"	MH	STD.	223.00	216.91	---	---	216.91	45°	0°
CB #12	72" X 48"	C	TYPE 1	221.25	216.87	---	---	216.87	4°,7°	1°,11°
CB #23	48" X 30"	C	TYPE 1	220.90	216.72	---	---	216.72	0°	23°, 30°
OS #1	48" X 30"	A	TRASH RACK*	221.70	214.92	---	---	214.92	0°	32°
OS #3	48" X 30"	A	TRASH RACK*	217.05	---	---	---	212.94	0°	0°
FES #3	---	FES	---	217.50	---	---	---	216.50	0°	---
FES #4	---	FES	---	218.00	---	---	---	216.00	0°	---

*SEE TRASH RACK DETAIL ON SHEET CE-19.

STORM DRAIN PIPE SCHEDULE

NAME	DESCRIPTION								
	FROM	TO	SIZE	TYPE	LENGTH	CLASS	SLOPE (FT./FT.)	INVERT IN	INVERT OUT
P-12	CB #12	EX CB	15"	HDPEP	62	---	0.04274	216.87	214.22
P-12A	CB #12	FES #4	24"	HDPEP	103	---	0.00845	216.87	216.00
P-12B	BUILDING	CB #12	24"	HDPEP	47	---	0.02681	218.13	216.87
P-14	SD MH #14	EX CB	24"	HDPEP	131	---	0.01000	212.54	211.23
P-22	OS #3	SD MH #14	24"	HDPEP	23	---	0.01739	212.94	212.54
P-16	OS #1	SD MH #14	24"	HDPEP	187	---	0.01273	214.92	212.54
P-17	OS #2	OS #1	24"	HDPEP	154	---	0.01013	216.48	214.92
P-23	CB #23	FES #3	18"	HDPEP	41	---	0.00537	216.72	216.50
P-24	SD MH #24	CB #23	18"	HDPEP	38	---	0.00500	216.91	216.72

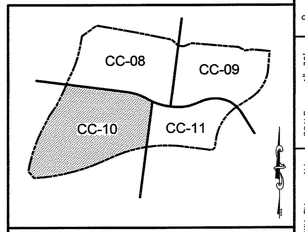

KEY MAP 1" = 500'

APPLICATION NO. 2015-0556-S
LINES AND GRADES PLAN
FOR
THE COMMONS AT LITTLE FALLS
CHRISTIANA HUNDRED - NEW CASTLE COUNTY, DELAWARE

CSC SPECTRUM LITTLE FALLS, LLC & NWC-SPE LLC
C/O INTERFOL PROPERTIES LP
1690 SUGARTOWN ROAD, SUITE 240
LANSDALE, PA 19446
(215) 855-5100

REVISIONS
1. REV. PER NCC REVIEW COMMENTS DATED 11-06-15
2. REV. PER NCC REVIEW COMMENTS DATED 1-19-16
3. ISSUED FOR CONSTRUCTION 1-27-2016

CHECKED BY TCW 11-06-15 1-19-16 1-27-16

Landmark Science & Engineering
NEW CASTLE, DE (302) 323-9377
DOVER, DE (302) 734-9597
HAYRE DE GRACE, MD (410) 939-2144
100 WEST COMMONS BOULEVARD, SUITE 301
NEW CASTLE, DELAWARE 19720
PHONE - (302) 323-9377 • FAX - (302) 323-9461
INFO@LANDMARK-SE.COM • WWW.LANDMARK-SE.COM

GRAPHIC SCALE 0 15 30 60

THIS DRAWING AND THE DESIGN SHOWN ARE THE PROPERTY OF LANDMARK SCIENCE AND ENGINEERING AND SHALL NOT BE REPRODUCED OR COPIED WITHOUT WRITTEN PERMISSION.

ALL CONSTRUCTION MUST BE DONE IN ACCORDANCE WITH OSHA REGULATIONS FOR SAFETY AND HEALTH ACT OF 1970 AND THE RULES AND REGULATIONS THERETO APPURTENANT.

© 2016 LANDMARK SCIENCE & ENGINEERING

DRAWN BY:	ALL
DESIGNED BY:	TCW/JAW
CHECKED BY:	TCW
COMM. NO.	C1115-15
DRAWING NAME:	GRADING-SET.DWG
SCALE:	1"=30'
DATE:	8/26/15
LAST MODIFIED	1/27/16
FILE NO.:	XXX
SHEET NO.	CC-10 of 16

CC-10

P:\C1115-15 THE COMMONS AT LITTLE FALLS PARKING GARAGE\DWG\CNST\GENDEV\GRADING-SET.DWG

STORM DRAIN STRUCTURE SCHEDULE

NAME	DESCRIPTION			T.G. ELEV.	INVERT IN	INVERT IN	INVERT OUT	INVERT OUT	PIPE ANGLE IN	PIPE ANGLE OUT
	BOX SIZE	TOP TYPE	GRATE							
SD MH #26	48" X 48"	MH	STD.	209.00	201.30 (EX15")	201.30 (P-26A)	---	201.30	0°, 9°	0°
CB #28**	72" X 48"	C	TYPE 1	209.37	---	---	206.55(P-28)	206.55(P-28A)	---	11°,27°
CB #29**	72" X 48"	C	TYPE 1	215.80	212.27	---	---	212.27	8°	5°
CB #30	48" X 30"	C	TYPE 1	217.00	212.73	---	---	212.73	0°	7°
CB #31	48" X 30"	C	TYPE 1	220.50	---	---	---	213.70	---	0°
OS #4	48" X 30"	A	TRASH RACK*	207.02	---	---	---	202.00	---	0°
FES #1	---	FES	---	209.00	---	---	---	206.00	0°	---
FES #2	---	FES	---	209.00	---	---	---	207.00	0°	---

*SEE TRASH RACK DETAIL ON SHEET CE-19.

**SEE CB#28 AND CB#29 DETAILS ON SHEET CC-03.

STORM DRAIN PIPE SCHEDULE

NAME	DESCRIPTION								
	FROM	TO	SIZE	TYPE	LENGTH	CLASS	SLOPE (FT./FT.)	INVERT IN	INVERT OUT
P-26A	OS #4	SD MH #26	15"	HDPEP	14	---	0.00500	202.00	201.30
P-28	CB #28	EX CB	15"	HDPEP	16	---	0.00438	206.55	206.48
P-28A	CB #28	FES #1	15"	HDPEP	31	---	0.01774	206.55	206.00
P-29	CB#29	EX CB	15"	HDPEP	137	---	0.01000	212.27	210.90
P-29A	CB #29	FES #2	15"	HDPEP	191	---	0.02759	212.27	207.00
P-30	CB #30	CB #29	15"	HDPEP	46	---	0.01000	212.73	212.27
P-31	CB #31	CB #30	15"	HDPEP	97	---	0.01000	213.70	212.73

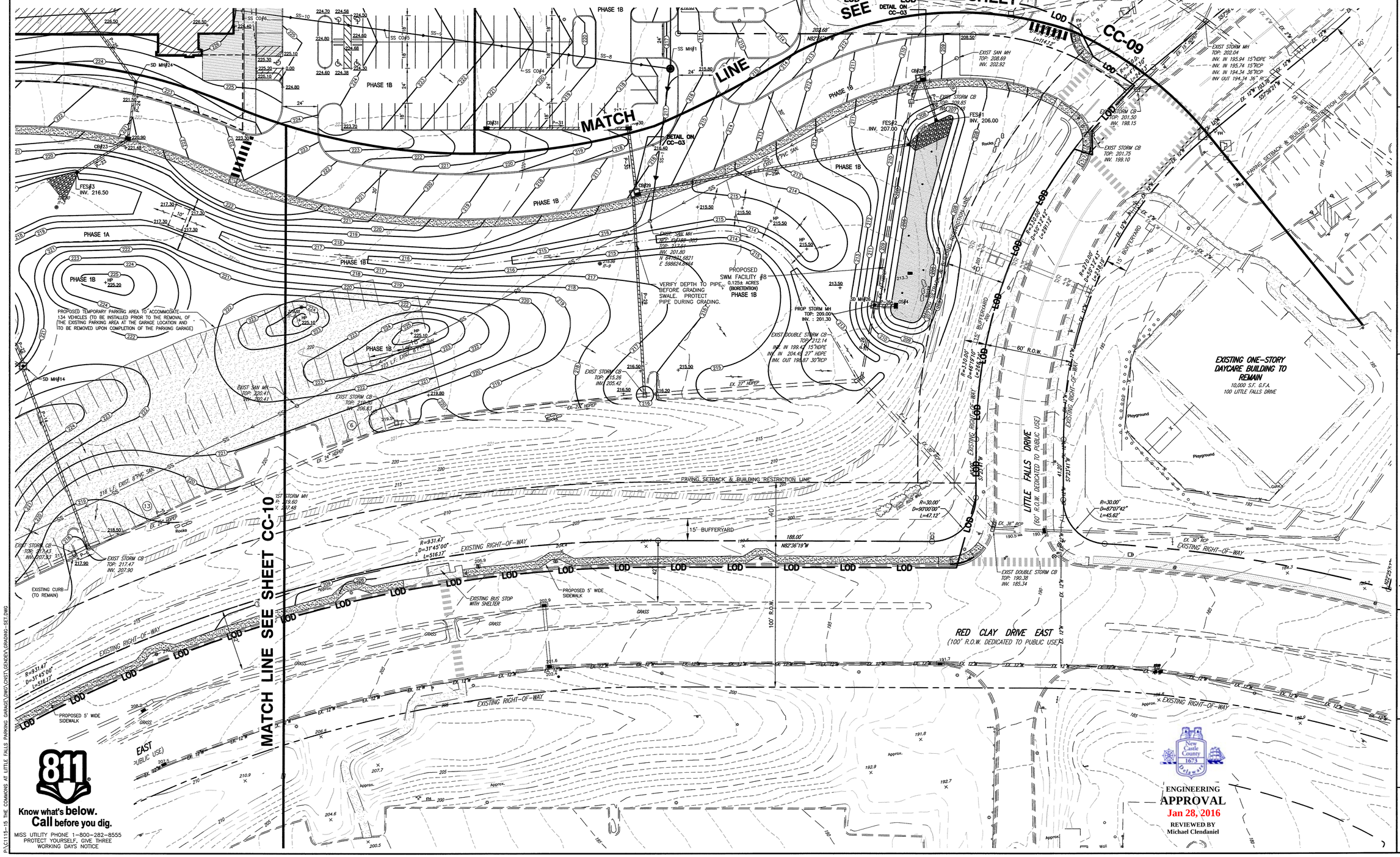

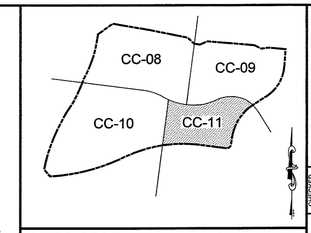

KEY MAP 1" = 500'

Know what's below. Call before you dig.

MISS UTILITY PHONE 1-800-282-8555
PROTECT YOURSELF, GIVE THREE WORKING DAYS NOTICE

ENGINEERING APPROVAL
Jan 28, 2016
REVIEWED BY
Michael Clendaniel

REVISIONS	CHECKED BY
1. REV. PER NCC REVIEW COMMENTS DATED 11-06-15	TCW 11-10-15
2. REV. PER NCC REVIEW COMMENTS DATED 1-19-16	TCW 1-19-16
3. ISSUED FOR CONSTRUCTION 1-27-2016	TCW 1-27-16

APPLICATION NO. 2015-0556-S
LINES AND GRADES PLAN
FOR
THE COMMONS AT LITTLE FALLS
CHRISTIANA HUNDRED - NEW CASTLE COUNTY, DELAWARE

CSC SPECTRUM LITTLE FALLS, LLC & NWC-SPE LLC
C/O TREFOIL PROPERTIES LP
1680 SOUTH COLLEGE AVENUE, SUITE 240
LANSDALE, PA 19446
(215) 855-5100

Landmark Science & Engineering
NEW CASTLE, DE (302) 323-9377
DOVER, DE (302) 734-9597
HAYES DE GRACE, MD (410) 939-2144
100 WEST COMMONS BOULEVARD, SUITE 301
NEW CASTLE, DELAWARE 19720
PHONE - (302) 323-9377 • FAX - (302) 323-9461
INFO@LANDMARK-SE.COM • WWW.LANDMARK-SE.COM

GRAPHIC SCALE 0 15 30 60

THIS DRAWING AND THE DESIGN SHOWN ARE THE PROPERTY OF LANDMARK SCIENCE AND ENGINEERING AND SHALL NOT BE REPRODUCED WITHOUT WRITTEN PERMISSION.

THIS DRAWING DOES NOT INCLUDE NECESSARY COMPONENTS FOR CONSTRUCTION SAFETY.

ALL CONSTRUCTION MUST BE DONE IN COMPLIANCE WITH OSHA STANDARDS FOR SAFETY AND HEALTH ACT OF 1970 AND THE RULES AND REGULATIONS THERETO APPURTENANT.

DRAWN BY:	ALL	SCALE:	1"=30'
DESIGNED BY:	TCW/JAW	DATE:	8/26/15
CHECKED BY:	TCW	LAST MODIFIED	1/27/16
COMM. NO.	C1115-15	FILE NO.:	XXX
DRAWING NAME:	GRADING-SET.DWG		

CC-11

SHEET NO. CC-11 of 16

© 2016 LANDMARK SCIENCE & ENGINEERING

P:\C1115-15 THE COMMONS AT LITTLE FALLS PARKING GARAGE\DWG\CNST\GENDEV\GRADING-SET.DWG

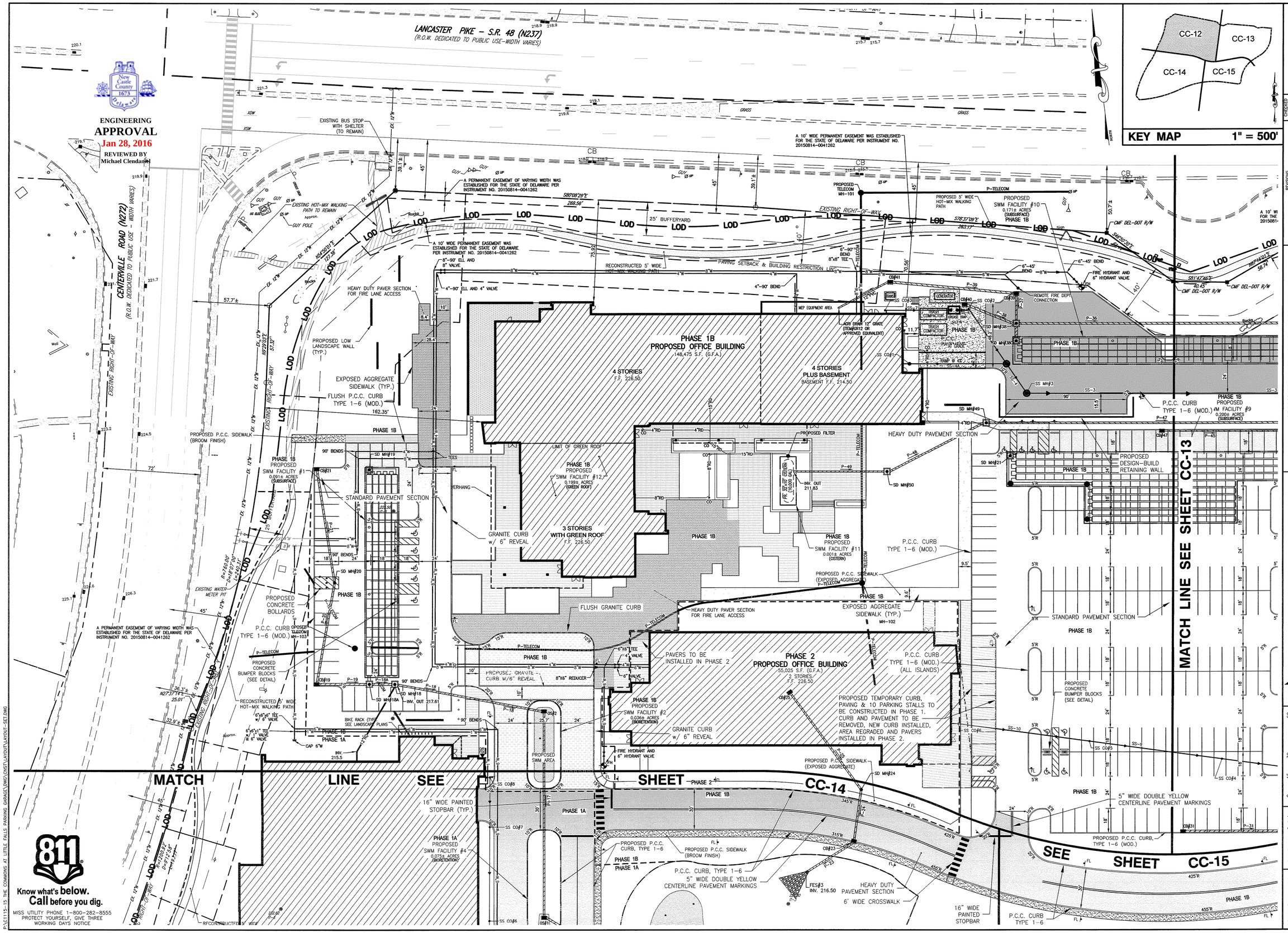

P:\C1115-15 THE COMMONS AT LITTLE FALLS PARKING GARAGE\DWG\CNST\LAYOUT\LAYOUT-SET.DWG

APPLICATION NO. 2015–0556–S
GENERAL SITE LAYOUT AND UTILITY PLANS
FOR
THE COMMONS AT LITTLE FALLS
CHRISTIANA HUNDRED – NEW CASTLE COUNTY, DELAWARE

OWNER
CSC SPECTRUM LITTLE FALLS, LLC & NWC–SPE LLC
C/O TREFOIL PROPERTIES LP
1690 SUMNEYTOWN PIKE, SUITE 240
LANSDALE, PA 19446
(215) 855–5100

Landmark Science & Engineering
100 WEST COMMONS BOULEVARD, SUITE 301
NEW CASTLE, DELAWARE 19720
PHONE - (302) 323-9377 • FAX - (302) 323-9461
INFO @ LANDMARK-SE.COM • WWW.LANDMARK-SE.COM
NEW CASTLE, DE (302) 323-9377
DOVER, DE (302) 734-9597
HAVRE DE GRACE, MD (410) 939-2144

REVISIONS

1. REV. PER NCC ENGINEERING COMMENTS DATED 11–06–15	TCW	1–06–16
2. REV. PER PLUMBING PLAN CHANGE–ADDED LATERAL FROM GARAGE	TCW	1–25–2016
3. ISSUED FOR CONSTRUCTION 1–27–2016	TCW	1–27–16

CHECKED BY TCW 1–06–16

GRAPHIC SCALE 0 15 30 60

THIS DRAWING AND THE DESIGN SHOWN ARE THE EXCLUSIVE PROPERTY OF LANDMARK SCIENCE AND ENGINEERING AND SHALL NOT BE ALTERED OR COPIED WITHOUT WRITTEN PERMISSION.

THIS DRAWING DOES NOT INCLUDE NECESSARY COMPONENTS FOR CONSTRUCTION SAFETY. ALL CONSTRUCTION MUST BE DONE IN COMPLIANCE WITH THE OCCUPATIONAL SAFETY AND HEALTH ACT OF 1970 AND THE RULES AND REGULATIONS THERETO APPURTENANT.

DRAWN BY: ALL	SCALE: 1"=30'		
DESIGNED BY: TCW/JAV	DATE: 8/26/15		
CHECKED BY: TCW	LAST MODIFIED: 1/27/16		
COMM. NO. C1115–15	FILE NO.: XXX		
DRAWING NAME: LAYOUT–SET.DWG			

CC-12

SHEET NO. CC-12 of 16

© 2016 LANDMARK SCIENCE & ENGINEERING

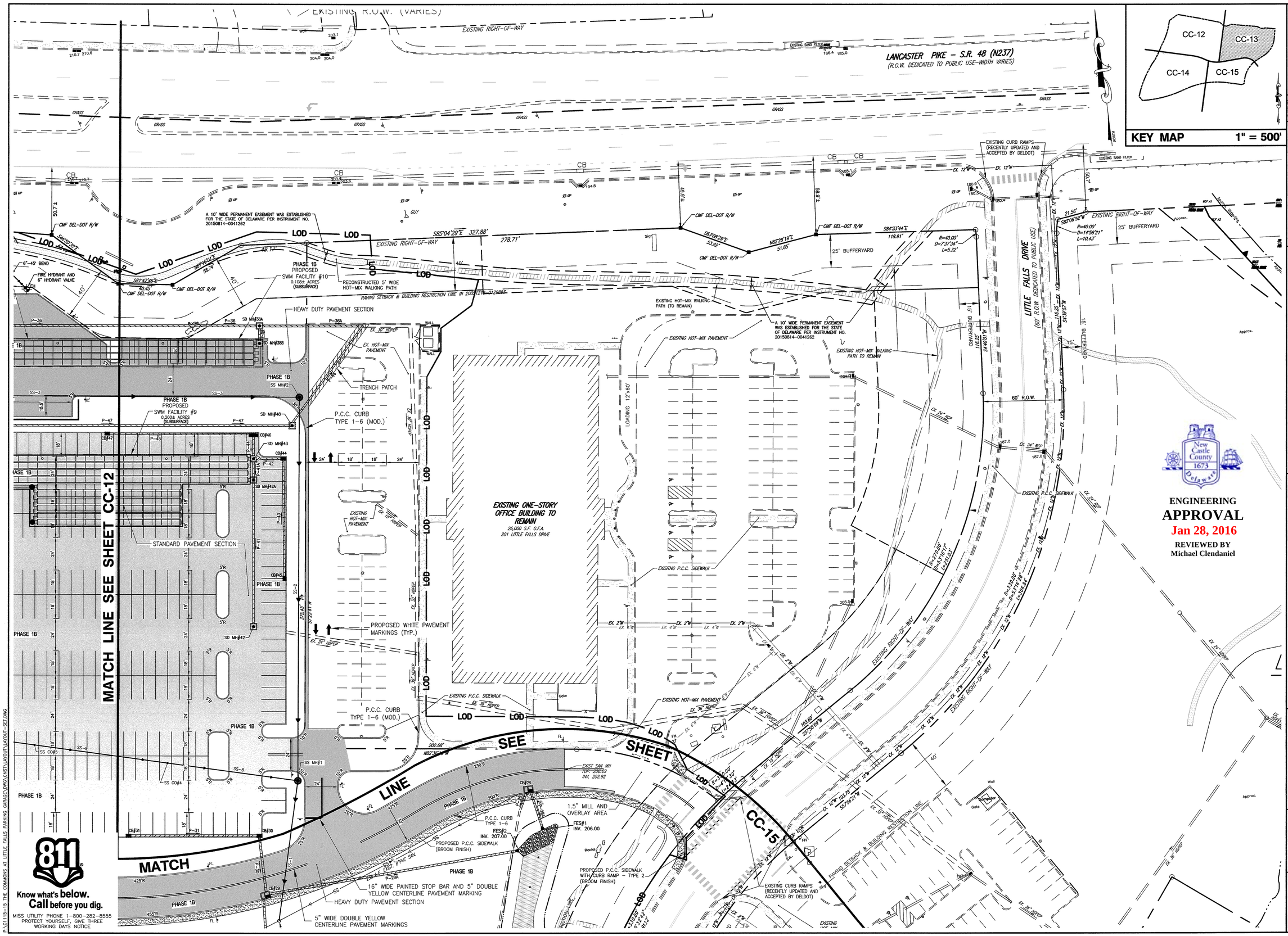

KEY MAP 1" = 500'

ENGINEERING
APPROVAL
Jan 28, 2016
REVIEWED BY
Michael Clendaniel

811
Know what's below.
Call before you dig.
MISS UTILITY PHONE 1-800-282-8555
PROTECT YOURSELF, GIVE THREE WORKING DAYS NOTICE

P:\C1115-15 THE COMMONS AT LITTLE FALLS PARKING GARAGE\DWG\CNST\LAYOUT\LAYOUT-SET.DWG

REVISIONS
1. REV. PER NCC ENGINEERING COMMENTS DATED 11-06-15 — CHECKED BY TCW 1-08-16
2. ISSUED FOR CONSTRUCTION 1-27-2016 — TCW 1-27-16

APPLICATION NO. 2015-0556-S
GENERAL SITE LAYOUT AND UTILITY PLANS
FOR
THE COMMONS AT LITTLE FALLS
CHRISTIANA HUNDRED - NEW CASTLE COUNTY, DELAWARE
OWNER
CSC SPECTRUM LITTLE FALLS, LLC & NWC-SPE LLC
C/O TREFOIL PROPERTIES LP
1690 SUMNEYTOWN PIKE, SUITE 240
LANSDALE, PA 19446
(215) 855-5100

Landmark Science & Engineering
100 WEST COMMONS BOULEVARD, SUITE 301
NEW CASTLE, DELAWARE 19720
PHONE - (302) 323-9377 • FAX - (302) 323-9461
INFO @ LANDMARK-SE.COM • WWW.LANDMARK-SE.COM
NEW CASTLE, DE (302) 323-9377
DOVER, DE (302) 734-9597
HAVRE DE GRACE, MD (410) 939-2144

GRAPHIC SCALE 0 15 30 60

THIS DRAWING AND THE DESIGN SHOWN ARE THE EXCLUSIVE PROPERTY OF LANDMARK SCIENCE AND ENGINEERING AND SHALL NOT BE ALTERED OR COPIED WITHOUT WRITTEN PERMISSION.

THIS DRAWING DOES NOT INCLUDE NECESSARY COMPONENTS FOR CONSTRUCTION SAFETY.

ALL CONSTRUCTION MUST BE DONE IN COMPLIANCE WITH THE OCCUPATIONAL SAFETY AND HEALTH ACT OF 1970 AND THE RULES AND REGULATIONS THERETO APPURTENANT

DRAWN BY: ALL	SCALE: 1"=30'		
DESIGNED BY: TCW/JAV	DATE: 8/26/15		
CHECKED BY: TCW	LAST MODIFIED 1/27/16		
COMM. NO. C1115-15	FILE NO.: XXX		
DRAWING NAME: LAYOUT-SET.DWG			

CC-13
SHEET NO. CC-13 of 16

© 2016 LANDMARK SCIENCE & ENGINEERING

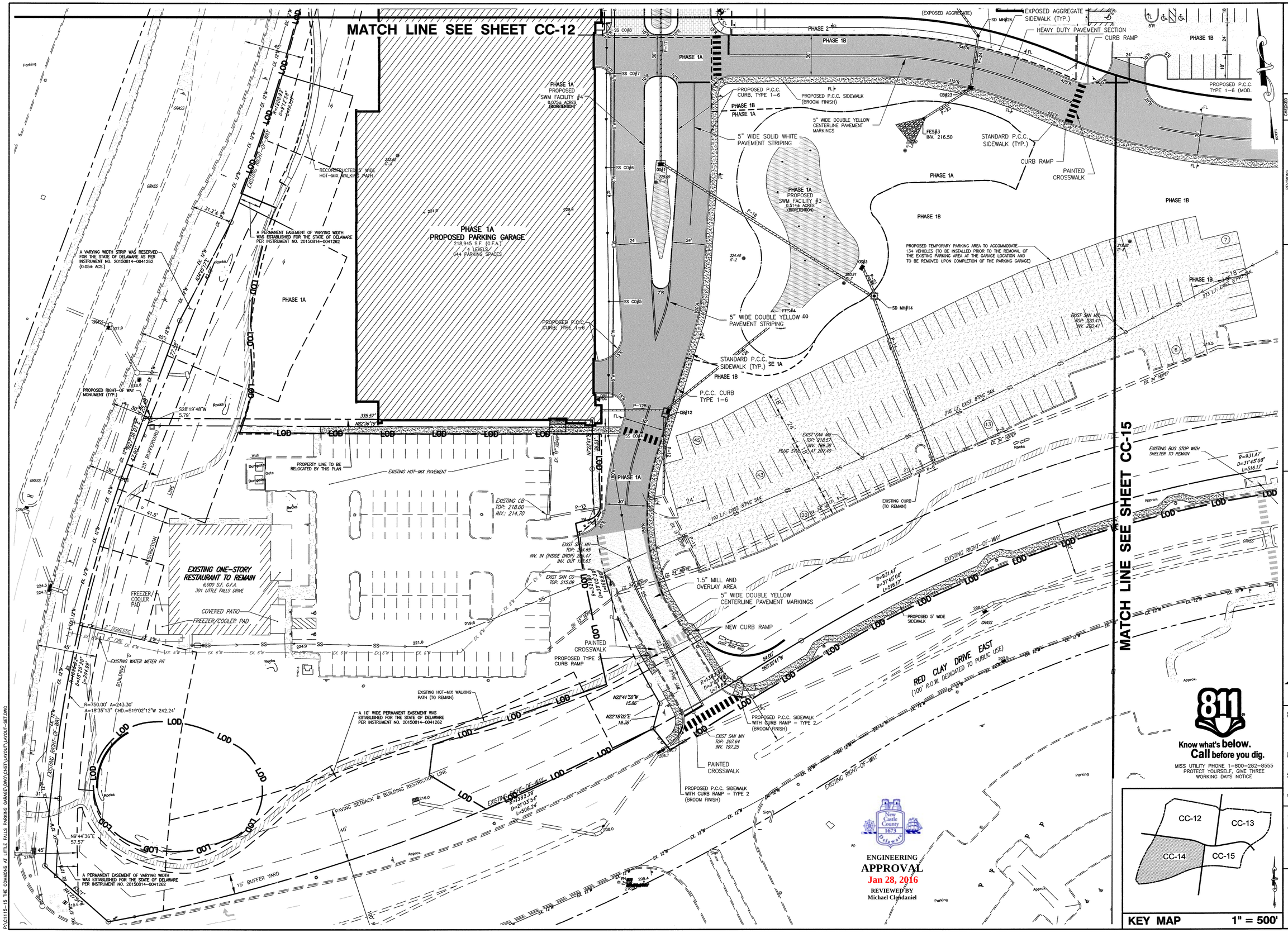

ENGINEERING APPROVAL
Jan 28, 2016
REVIEWED BY
Michael Clendaniel

811
Know what's below.
Call before you dig.
MISS UTILITY PHONE 1-800-282-8555
PROTECT YOURSELF, GIVE THREE WORKING DAYS NOTICE

KEY MAP 1" = 500'

REVISIONS
1. REV. PER NCC ENGINEERING COMMENTS DATED 11-06-15 TCW 1-06-16
2. REV. PER PLUMBING PLAN CHANGE-ADDED LATERAL FROM GARAGE TCW 1-25-2016
3. ISSUED FOR CONSTRUCTION 1-27-2016 TCW 1-27-16

APPLICATION NO. 2015-0556-S
GENERAL SITE LAYOUT AND UTILITY PLANS
FOR
THE COMMONS AT LITTLE FALLS
CHRISTIANA HUNDRED - NEW CASTLE COUNTY, DELAWARE

OWNER
CSC SPECTRUM LITTLE FALLS, LLC & NWC-SPE LLC
C/O TREFOIL PROPERTIES LP
1690 SUMNEYTOWN PIKE, SUITE 240
LANSDALE, PA 19446
(215) 855-5100

Landmark Science & Engineering
100 WEST COMMONS BOULEVARD, SUITE 301
NEW CASTLE, DELAWARE 19720
PHONE - (302) 323-9377 • FAX - (302) 323-9461
INFO @ LANDMARK-SE.COM • WWW.LANDMARK-SE.COM
NEW CASTLE, DE (302) 323-9377
DOVER, DE (302) 734-9597
HAVRE DE GRACE, MD (410) 939-2144

THIS DRAWING AND THE DESIGN SHOWN ARE THE EXCLUSIVE PROPERTY OF LANDMARK SCIENCE AND ENGINEERING AND SHALL NOT BE ALTERED OR COPIED WITHOUT WRITTEN PERMISSION.
THIS DRAWING DOES NOT INCLUDE NECESSARY COMPONENTS FOR CONSTRUCTION SAFETY.
ALL CONSTRUCTION MUST BE DONE IN COMPLIANCE WITH THE OCCUPATIONAL SAFETY AND HEALTH ACT OF 1970 AND THE RULES AND REGULATIONS THERETO APPURTENANT

0 15 30 60
GRAPHIC SCALE

DRAWN BY: ALL	SCALE: 1"=30'		
DESIGNED BY: TCW/JAV	DATE: 8/26/15		
CHECKED BY: TCW	LAST MODIFIED 1/27/16		
COMM. NO. C1115-15	FILE NO.: XXX		
DRAWING NAME: LAYOUT-SET.DWG			

CC-14
SHEET NO. CC-14 of 16

© 2016 LANDMARK SCIENCE & ENGINEERING

P:\C1115-15 THE COMMONS AT LITTLE FALLS PARKING GARAGE\DWG\CNST\LAYOUT\LAYOUT-SET.DWG

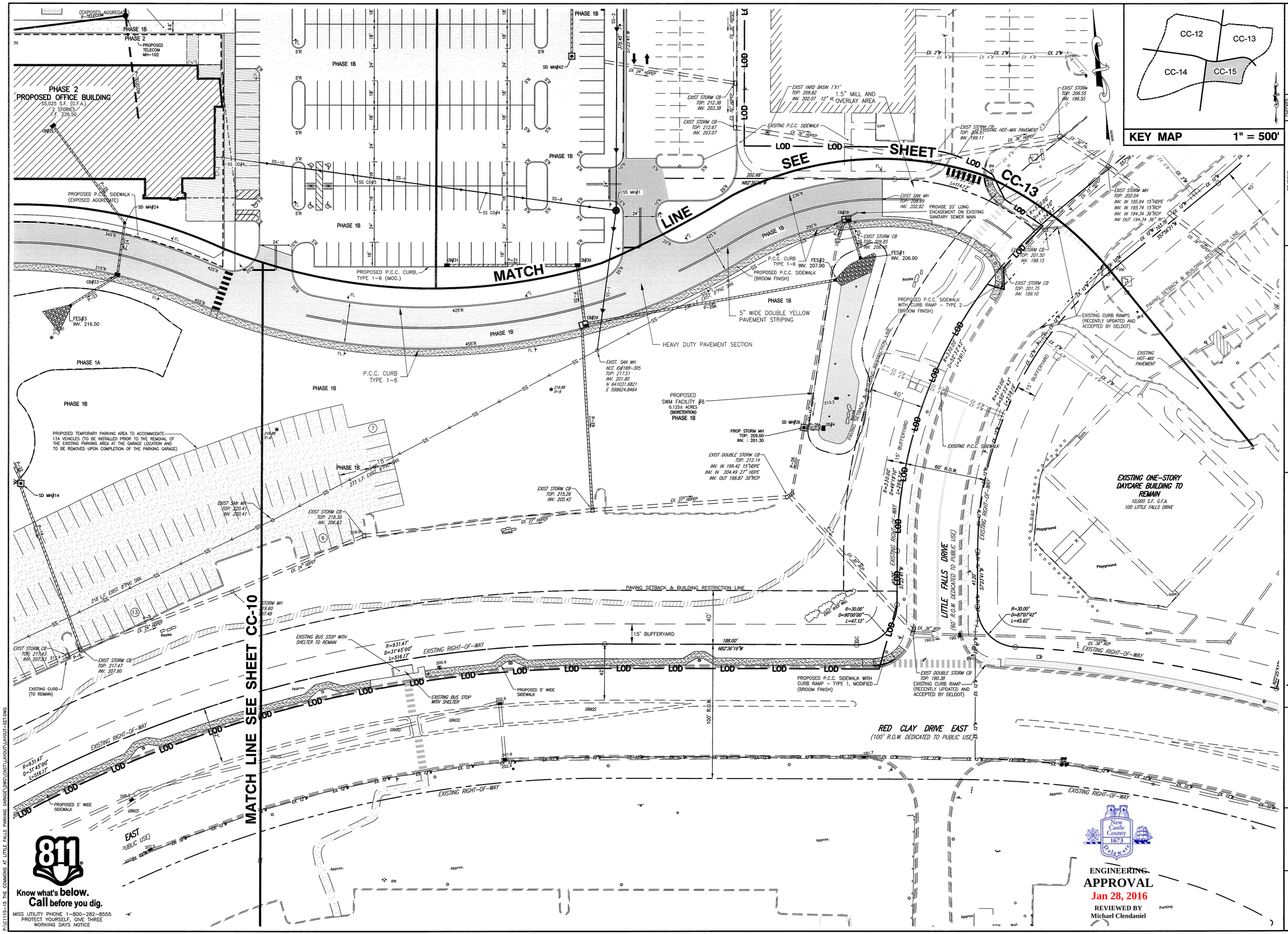

KEY MAP 1" = 500'

REVISIONS	CHECKED
1. REV. PER NCC ENGINEERING COMMENTS DATED 11-06-15	T. CROW 11-06-15
2. ISSUED FOR CONSTRUCTION 1-27-2016	T. CROW 1-27-16

APPLICATION NO. 2015-0556-S
GENERAL SITE LAYOUT AND UTILITY PLANS
CHRISTIANA HUNDRED - NEW CASTLE COUNTY, DELAWARE

THE COMMONS AT LITTLE FALLS

FOR

CSC SPECTRUM LITTLE FALLS, LLC & NWC-SPE LLC
TRUSTEE OF THE WILMINGTON TRUST
1690 SUMNEYTOWN PIKE, SUITE 240
LANSDALE, PA 19446
(215) 855-3100

Landmark Science & Engineering
100 WEST COMMONS BOULEVARD, SUITE 301
NEW CASTLE, DELAWARE 19720
PHONE - (302) 323-9377 • FAX - (302) 323-9461
INFO@LANDMARK-SEC.COM • WWW.LANDMARK-SEC.COM
NEW CASTLE, DE (302) 323-9377
DOVER, DE (302) 734-9597
HAYRE DE GRACE, MD (410) 939-2144

0 15 30 60
GRAPHIC SCALE

THIS DRAWING AND THE DESIGN SHOWN, ARE THE PROPERTY OF LANDMARK SCIENCE AND ENGINEERING AND SHALL NOT BE REPRODUCED OR COPIED WITHOUT WRITTEN PERMISSION.

THIS DRAWING DOES NOT INCLUDE NECESSARY COMPONENTS FOR CONSTRUCTION SAFETY. CONTRACTOR IS SOLELY RESPONSIBLE FOR COMPLIANCE WITH THE OCCUPATIONAL SAFETY AND HEALTH ACT OF 1970 AND THE RULES AND REGULATIONS PERTINENT THERETO.

© 2016 LANDMARK SCIENCE & ENGINEERING

DRAWN BY: ALL	SCALE: 1"=30'	SHEET NO. CC-15 of 16	
DESIGNED BY: TCW/JAV	DATE: 8/26/15		
CHECKED BY: TCW	LAST MODIFIED 1/27/16		
COMM. NO. C1115-15	FILE NO.: XXX		
DRAWING NAME: LAYOUT-SET.DWG			

CC-15

P:\C1115-15 THE COMMONS AT LITTLE FALLS PARKING GARAGE\DWG\CNST\LAYOUT\LAYOUT-SET.DWG

APPLICATION NO. 2015-0556-S
COVER SHEET AND GENERAL NOTES
FOR
THE COMMONS AT LITTLE FALLS
SEDIMENT & STORMWATER MANAGEMENT PLANS
CHRISTIANA HUNDRED
CHRISTINA RIVER WATERSHED
TAX PARCELS 07-031.00-007, 07-031.00-019 & 07-031.00-020
NEW CASTLE COUNTY - DELAWARE

PROJECT NOTES:

1. PARCEL DATA:
   TAX MAP NUMBERS: 07-031.00-007 (LOT 9B)
   07-031.00-019 (LOT 9A)
   07-031.00-020 (LOT 9C)
   PLUS #: N/A
   NEW CASTLE COUNTY #2014-0750(S)
   ADDRESS : LANCASTER PIKE AND CENTERVILLE ROAD WILMINGTON, DE 19808
   LATITUDE/LONGITUDE: 39.76/75.6222
   (BENCHMARK REFERENCED BELOW)
   EXISTING SITE AREA: 24.646 ACRES
   PROPOSED SITE AREA: 24.646 ACRES
   EXISTING WETLAND AREA: N/A
   PROPOSED CONDITION: OFFICE BUILDINGS TOTALING 235,500 S.F. G.F.A
   PROPOSED DISCHARGE LOCATION AS DELINEATED ON THE CDA PLAN IN REPORT:
   POA#1 EXISTING DRAINAGE INLET WITH 36" RCP OUTFALL AT INTERSECTION OF LITTLE FALLS DRIVE AND RED CLAY DRIVE EAST
   POA#2 EXISTING ONSITE DRAINAGE INLET WITH 30" RCP OUTFALL ALONG EXISTING CURB LINE JUST WEST OF EXISTING 26,000 OFFICE BUILDING

   PROPOSED LIMIT OF DISTURBANCE PER DISCHARGE LOCATION:

   TOPOGRAPHIC SURVEY:

   A. TOPOGRAPHIC INFORMATION IS BASED ON AERIAL SURVEY FLOWN BY AXIS GEOSPATIAL, L.L.C. IN SEPTEMBER 4, 2013.

   B. HORIZONTAL DATUM: NAD 83/2011
   VERTICAL DATUM: NAVD 88

   BENCHMARK: TOP OF CONCRETE MONUMENT AT THE SOUTHEAST INTERSECTION OF CENTERVILLE ROAD AND LANCASTER PIKE.
   ELEVATION: 219.72

2. OWNER DATA:
   CSC SPECTRUM LITTLE FALLS, LLC & NWC-SPE LLC
   C/O TREFOIL PROPERTIES LP
   1690 SUMNEYTOWN PIKE, SUITE 240
   PHONE: (215) 855-5100
   FAX: (215) 855-6583

3. LAND DEVELOPER DATA:
   NWC PARTNERS, LLC C/O TREFOIL PROPERTIES, INC.
   1690 SUMNEYTOWN PIKE
   LANSDALE, PA 19446
   PHONE: (215) 855-5100
   FAX: (215) 855-6583

4. DESIGNER DATA:
   TED C. WILLIAMS, P.E.
   LANDMARK SCIENCE & ENGINEERING
   100 W. COMMONS BOULEVARD
   NEW CASTLE, DELAWARE, 19720
   PHONE: (302) 323-9377 EXT. 121

5. REVIEW AGENCY DATA:
   MICHAEL CLENDANIEL, P.E.
   NEW CASTLE COUNTY DEPARTMENT OF LAND USE
   87 READS WAY
   NEW CASTLE, DELAWARE, 19720
   PHONE: (302) 395-5415

6. WETLANDS: THIS SITE WAS EVALUATED IN ACCORDANCE WITH THE PROCEDURES SET FORTH IN THE 1987 CORPS OF ENGINEERS WETLAND DELINEATION MANUAL (TECHNICAL REPORT Y-87-1), AND SUBSEQUENT PUBLIC NOTICES, TO IDENTIFY THE PRESENCE OF JURISDICTIONAL WETLANDS, AND NO WETLANDS WERE FOUND TO EXIST ON THE SITE.

SEDIMENT AND STORMWATER CONSTRUCTION NOTES:

1. A PRE-CONSTRUCTION MEETING (UNLESS WAIVED BY NEW CASTLE COUNTY) MUST BE HELD PRIOR TO COMMENCING CONSTRUCTION. CONTACT NEW CASTLE COUNTY ENGINEERING SECTION AT (302-395-5400) TO SCHEDULE MEETING. FAILURE TO DO SO CONSTITUTES A VIOLATION OF THE APPROVED SEDIMENT AND STORMWATER MANAGEMENT PLAN.
2. REVIEW AND OR APPROVAL OF THE SEDIMENT AND STORMWATER MANAGEMENT PLAN SHALL NOT RELIEVE THE CONTRACTOR FROM HIS OR HER RESPONSIBILITIES FOR COMPLIANCE WITH THE REQUIREMENTS OF THE SEDIMENT AND STORMWATER REGULATIONS, NOR SHALL IT RELIEVE THE CONTRACTOR FROM ERRORS OR OMISSIONS IN THE APPROVED PLAN.
3. IF THE APPROVED PLAN NEEDS TO BE MODIFIED, ADDITIONAL SEDIMENT AND STORMWATER CONTROL MEASURES MAY BE REQUIRED AS DEEMED NECESSARY BY DNREC.
4. FOLLOWING SOIL DISTURBANCE OR REDISTURBANCE, PERMANENT OR TEMPORARY STABILIZATION SHALL BE COMPLETED FOR ALL PERIMETER SEDIMENT CONTROLS, SOIL STOCKPILES, AND ALL OTHER DISTURBED OR GRADED AREAS ON THE PROJECT SITE WITHIN 14 CALENDAR DAYS UNLESS MORE RESTRICTIVE FEDERAL REQUIREMENTS APPLY.
5. ALL EROSION AND SEDIMENT CONTROL PRACTICES SHALL COMPLY WITH THE DELAWARE EROSION AND SEDIMENT CONTROL HANDBOOK, LATEST EDITION.
6. AT ANY TIME A DEWATERING OPERATION IS USED, IT SHALL BE PREVIOUSLY APPROVED BY THE AGENCY CONSTRUCTION SITE REVIEWER FOR A NON-EROSIVE POINT OF DISCHARGE, AND A DEWATERING PERMIT SHALL BE APPROVED BY THE DNREC WELL PERMITTING BRANCH.
7. APPROVED PLANS REMAIN VALID FOR 3 YEARS FROM THE DATE OF APPROVAL.
8. POST-CONSTRUCTION VERIFICATION DRAWINGS ARE TO BE SUBMITTED TO NEW CASTLE COUNTY DEPARTMENT OF LAND USE AS REQUIRED.
9. APPROVAL OF A SEDIMENT AND STORMWATER PLAN DOES NOT GRANT OR IMPLY A RIGHT TO DISCHARGE STORMWATER RUNOFF. THE OWNER/DEVELOPER IS RESPONSIBLE FOR ACQUIRING ANY AND ALL AGREEMENTS, EASEMENTS, ETC., NECESSARY TO COMPLY WITH STATE DRAINAGE AND OTHER APPLICABLE LAWS.
10. THE DATABASE ID NUMBER FOR THE NOTICE OF INTENT FOR STORM WATER DISCHARGES ASSOCIATED WITH CONSTRUCTION ACTIVITY UNDER A NPDES GENERAL PERMIT FOR THIS PROJECT IS #4944. AT ANY TIME THE OWNERSHIP FOR THIS PROJECT CHANGES, A TRANSFER OF AUTHORIZATION OR A CO-PERMITTEE APPLICATION MUST BE SUBMITTED TO DNREC. THE PERMITTEE OF RECORD SHALL NOT BE RELIEVED OF THEIR RESPONSIBILITIES UNTIL A NOTICE OF TERMINATION HAS BEEN PROCESSED BY DNREC.
11. THE OWNER SHALL BE FAMILIAR WITH AND COMPLY WITH ALL ASPECTS OF THE NPDES CONSTRUCTION GENERAL PERMIT ASSOCIATED WITH THE PROJECT, INCLUDING, BUT NOT LIMITED TO, PERFORMING WEEKLY SITE INSPECTIONS DURING CONSTRUCTION AND AFTER RAIN EVENTS, AND MAINTAINING WRITTEN LOGS OF THESE INSPECTIONS.
12. BEFORE ANY EARTHWORK OR EXCAVATION TAKES PLACE, THE CONTRACTOR SHALL CALL MISS UTILITY AT 811 OR 1.800.282.8555 AT LEAST 48 HOURS PRIOR TO CONSTRUCTION, TO HAVE ALL EXISTING UTILITIES MARKED ONSITE.
13. THE CONTRACTOR SHALL AT ALL TIMES PROTECT AGAINST SEDIMENT OF DEBRIS LADEN RUNOFF OR WIND FROM LEAVING THE SIDE. PERIMETER CONTROLS SHALL BE CHECKED DAILY AND ADJUSTED AND/OR REPAIRED TO FULLY CONTAIN AND CONTROL SEDIMENT FROM LEAVING THE SITE. ACCUMULATED SEDIMENT SHALL BE REMOVED WHEN IT HAS REACHED HALF OF THE EFFECTIVE CAPACITY OF THE CONTROL. IN ADDITION, THE CONTRACTOR MAY NEED TO ADJUST OR ALTER MEASURES IN TIMES OF ADVERSE WEATHER CONDITIONS, OR AS DIRECTED BY THE AGENCY SITE REVIEWER.
14. BEST AVAILABLE TECHNOLOGY (BAT) SHALL BE EMPLOYED TO MANAGE TURBID DISCHARGES IN ACCORDANCE WITH REQUIREMENTS OF 7. DEL C. CH 60, REGULATIONS GOVERNING THE CONTROL OF WATER POLLUTION, SECTION 9.1.02, KNOWN AS SPECIAL CONDITIONS FOR STORMWATER DISCHARGES ASSOCIATED WITH CONSTRUCTION ACTIVITIES AND DEPARTMENT POLICIES, PROCEDURES, AND GUIDANCE.
15. DOCUMENTATION OF SOIL TESTING AND MATERIALS USED FOR TEMPORARY OR PERMANENT STABILIZATION INCLUDING BUT NOT LIMITED TO SOIL TEST RESULTS, SEED TAGS, SOIL AMENDMENT TAGS, ETC, SHALL BE PROVIDED TO THE DEPARTMENT OR DELEGATED AGENCY TO VERIFY THAT THE PERMANENT OR TEMPORARY STABILIZATION HAS BEEN COMPLETED IN ACCORDANCE WITH THE APPROVED PLAN AND THE STANDARDS AND SPECIFICATIONS OF THE DELAWARE EROSION AND SEDIMENT CONTROL HANDBOOK, LATEST EDITION. THE DEPARTMENT OF THE DELEGATED AGENCY SHALL HAVE THE DISCRETION TO REQUIRE ADDITIONAL SOIL TESTING AND REAPPLICATION OF PERMANENT OR TEMPORARY STABILIZATION IN ACCORDANCE WITH THE SPECIFICATION PROVIDED WITHIN THE DELAWARE EROSION AND SEDIMENT CONTROL HANDBOOK, LATEST EDITION.

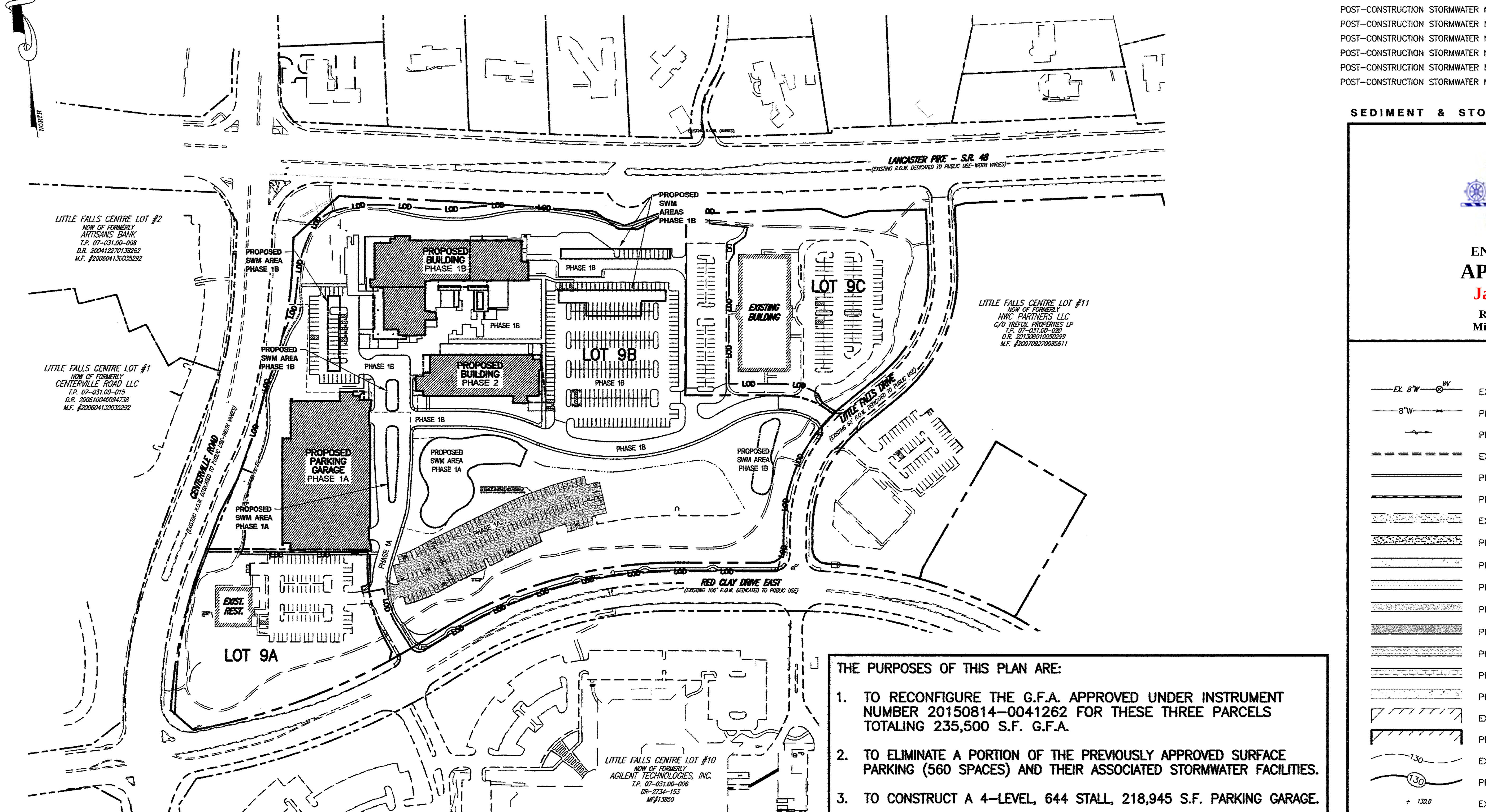

INDEX PLAN
SCALE: 1"=150'

THE PURPOSES OF THIS PLAN ARE:

1. TO RECONFIGURE THE G.F.A. APPROVED UNDER INSTRUMENT NUMBER 20150814-0041262 FOR THESE THREE PARCELS TOTALING 235,500 S.F. G.F.A.
2. TO ELIMINATE A PORTION OF THE PREVIOUSLY APPROVED SURFACE PARKING (560 SPACES) AND THEIR ASSOCIATED STORMWATER FACILITIES.
3. TO CONSTRUCT A 4-LEVEL, 644 STALL, 218,945 S.F. PARKING GARAGE.
4. TO ADJUST THE COMMON PROPERTY LINE BETWEEN LOT 9A AND 9B SOUTH OF THE PROPOSED PARKING GARAGE.
5. TO RECONFIGURE THE PARKING AREA WEST OF THE PHASE 1 BUILDING.

Know what's **below.**
Call before you dig.
MISS UTILITY PHONE 1-800-282-8555
PROTECT YOURSELF, GIVE THREE WORKING DAYS NOTICE

CERTIFICATION OF PLAN ACCURACY

I, TED C. WILLIAMS, HEREBY CERTIFY THAT I AM A REGISTERED PROFESSIONAL ENGINEER IN THE STATE OF DELAWARE AND THAT ALL OF THE INFORMATION ON THIS PLAN IS TRUE AND CORRECT TO THE ACCURACY REQUIRED BY ACCEPTED SURVEYING STANDARDS AND PRACTICES AND BY THE NEW CASTLE COUNTY UNIFIED DEVELOPMENT CODE.

TED C. WILLIAMS, P.E. — 1/27/16
DE P.E. #8461 — DATE

CERTIFICATION OF OWNER

I, THE UNDERSIGNED, HEREBY CERTIFY THAT CSC SPECTRUM LITTLE FALLS, LLC & NWC-SPE LLC ARE THE OWNERS OF THE PROPERTIES WHICH ARE THE SUBJECT OF THIS PLAN AND THAT THE LAND USE ACTION PROPOSED BY THIS PLAN IS MADE AT MY DIRECTION AND THAT I AUTHORIZE THIS PLAN TO BE APPROVED PURSUANT TO THE RECORD PLAN (INST. NUMBER ______________) IN ACCORDANCE WITH THE REGULATIONS OF THE NEW CASTLE COUNTY UNIFIED DEVELOPMENT CODE.

FURTHERMORE, I HEREBY CERTIFY THAT ALL LAND CLEARING, CONSTRUCTION, AND DEVELOPMENT SHALL BE DONE PURSUANT TO THE APPROVED PLAN AND THAT ALL RESPONSIBLE PERSONNEL (I.E. CLUE CARD HOLDER) INVOLVED IN THE LAND DISTURBANCE WILL HAVE A CERTIFICATE OF TRAINING PRIOR TO INITIATION OF THE PROJECT, AT A DNREC SPONSORED OR APPROVED TRAINING COURSE FOR THE CONTROL OF EROSION AND SEDIMENT DURING CONSTRUCTION. IN ADDITION, I GRANT THE DNREC SEDIMENT AND STORMWATER PROGRAM AND/OR THE RELEVANT DELEGATED AGENCY (NEW CASTLE COUNTY) THE RIGHT TO CONDUCT ON-SITE REVIEWS, AND I UNDERSTAND MY RESPONSIBILITES UNDER THE NPDES CONSTRUCTION GENERAL PERMIT, AS REFERENCED ON THIS COVER SHEET.

JAMES R. WRIGLEY, MANAGING MEMBER — 1/26/16
CSC SPECTRUM LITTLE FALLS, LLC & NWC-SPE LLC — DATE
C/O TREFOIL PROPERTIES LP
1690 SUMNEYTOWN PIKE
LANSDALE, PA 19446
(215) 855-5100 (PHONE)
(215) 855-6583 (FAX)

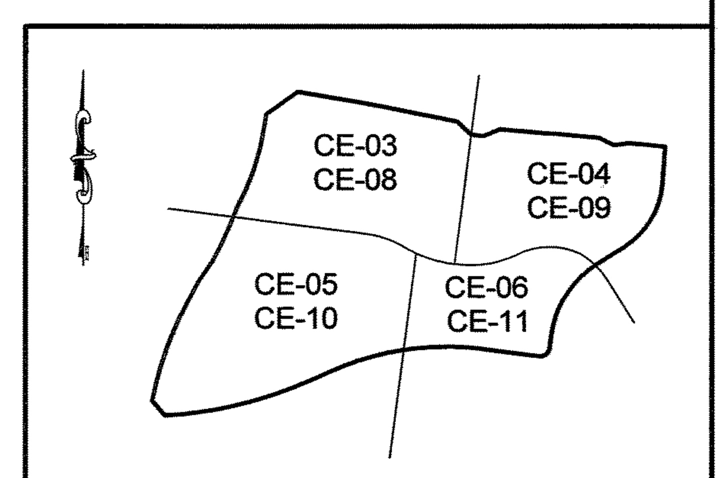

KEY MAP 1"=500'

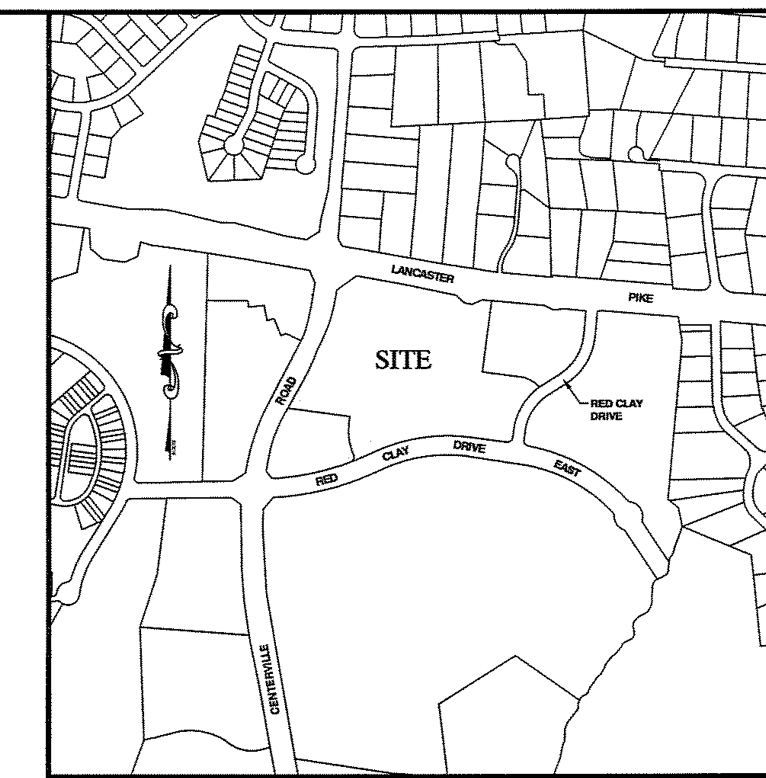

LOCATION MAP 1"=800'

SEDIMENT AND STORMWATER INDEX OF SHEETS

COVER SHEET AND GENERAL NOTES	CE-01
RESERVED	CE-02
PRE-CONSTRUCTION SITE STORMWATER MANAGEMENT PLANS	CE-03 TO CE-06
OVERALL CONSTRUCTION SITE STORMWATER MANAGEMENT PLAN	CE-07
CONSTRUCTION SITE SITE STORMWATER MANAGMENT PLANS	CE-08 TO CE-11
CONSTRUCTION SITE DETAILS AND NOTES	CE-12 TO CE-15
POST-CONSTRUCTION STORMWATER MANAGMENT PLAN - FACILITY #1	CE-16
POST-CONSTRUCTION STORMWATER MANAGMENT PLAN - FACILITY #2 & #4	CE-17
POST-CONSTRUCTION STORMWATER MANAGMENT PLAN - FACILITY #3	CE-18
POST-CONSTRUCTION STORMWATER MANAGEMENT PLAN - FACILITY #8	CE-19
POST-CONSTRUCTION STORMWATER MANAGMENT PLAN - FACILITY #9	CE-20
POST-CONSTRUCTION STORMWATER MANAGMENT PLAN - FACILITY #10	CE-21

SEDIMENT & STORMWATER APPROVAL STAMP

New Castle County 1673 Delaware
ENGINEERING
APPROVAL
Jan 28, 2016
REVIEWED BY
Michael Clendaniel

LEGEND

- EXISTING WATER MAIN AND WATER VALVE
- PROPOSED WATER MAIN AND WATER VALVE
- PROPOSED DRAINAGE FLOW PATH
- EXISTING VERTICAL P.C.C. CURB
- PROPOSED VERTICAL P.C.C. CURB
- PROPOSED FLUSH P.C.C. CURB
- EXISTING P.C.C. SIDEWALK
- PROPOSED P.C.C. SIDEWALK (STANDARD BROOM FINISH)
- PROPOSED P.C.C. SIDEWALK (EXPOSED AGGREGATE)
- PROPOSED ASPHALT SIDEWALK
- PROPOSED ASPHALT PAVEMENT (LIGHT DUTY)
- PROPOSED ASPHALT PAVEMENT (HEAVY DUTY)
- PROPOSED MILL AND OVERLAY
- PROPOSED GRANITE PAVERS
- PROPOSED CONCRETE PAD
- EXISTING BUILDING
- PROPOSED BUILDING
- EXISTING CONTOUR
- PROPOSED CONTOUR
- EXISTING SPOT ELEVATION
- PROPOSED SPOT ELEVATION
- EXISTING SANITARY SEWER AND MANHOLE
- PROPOSED SANITARY SEWER AND MANHOLE
- EXISTING STORM DRAIN AND CATCH BASIN
- PROPOSED STORM DRAIN AND CATCH BASIN
- EXISTING GAS MAIN AND GAS VALVE
- EXISTING FIRE HYDRANT
- PROPOSED FIRE HYDRANT
- PROPOSED FIRE LANE SIGN

REVISIONS

REVISIONS	CHECKED BY
1. REV. PER NCC ENGINEERING COMMENTS DATED 11-06-15	TCW 1-08-16
2. ISSUED FOR CONSTRUCTION 1-27-2016	TCW 1-27-16

APPLICATION NO. 2015-0556-S(S)
COVER SHEET AND GENERAL NOTES
FOR
THE COMMONS AT LITTLE FALLS
SEDIMENT & STORMWATER MANAGEMENT PLANS
CHRISTIANA HUNDRED - NEW CASTLE COUNTY, DELAWARE

OWNER
CSC SPECTRUM LITTLE FALLS, LLC & NWC-SPE LLC
C/O TREFOIL PROPERTIES LP
1690 SUMNEYTOWN PIKE, SUITE 240
LANSDALE, PA 19446
(215) 855-5100

Landmark Science & Engineering
100 WEST COMMONS BOULEVARD, SUITE 301
NEW CASTLE, DELAWARE 19720
PHONE - (302) 323-9377 • FAX - (302) 323-9461
INFO@LANDMARK-SE.COM • WWW.LANDMARK-SE.COM
NEW CASTLE, DE (302) 323-9377
DOVER, DE (302) 734-9597
HAVRE DE GRACE, MD (410) 939-2144

GRAPHIC SCALE 0 75 150 300

THIS DRAWING AND THE DESIGN SHOWN ARE THE EXCLUSIVE PROPERTY OF LANDMARK SCIENCE AND ENGINEERING AND SHALL NOT BE ALTERED OR COPIED WITHOUT WRITTEN PERMISSION.

THIS DRAWING DOES NOT INCLUDE NECESSARY COMPONENTS FOR CONSTRUCTION SAFETY.

ALL CONSTRUCTION MUST BE DONE IN COMPLIANCE WITH THE OCCUPATIONAL SAFETY AND HEALTH ACT OF 1970 AND THE RULES AND REGULATIONS THERETO APPURTENANT

DRAWN BY: ALL	SCALE: 1"=150'
DESIGNED BY: TCW/JAV	DATE: 8/26/15
CHECKED BY: TCW	LAST MODIFIED 1/22/16
COMM. NO. C1115-15	FILE NO.: XXX
DRAWING NAME: COVER.DWG	
SHEET NO. CE-01 of 21	CE-01

© 2016 LANDMARK SCIENCE & ENGINEERING

P:\C1115-15 THE COMMONS AT LITTLE FALLS PARKING GARAGE\DWG\CNST\S & S_COVER & PHASING\COVER.DWG

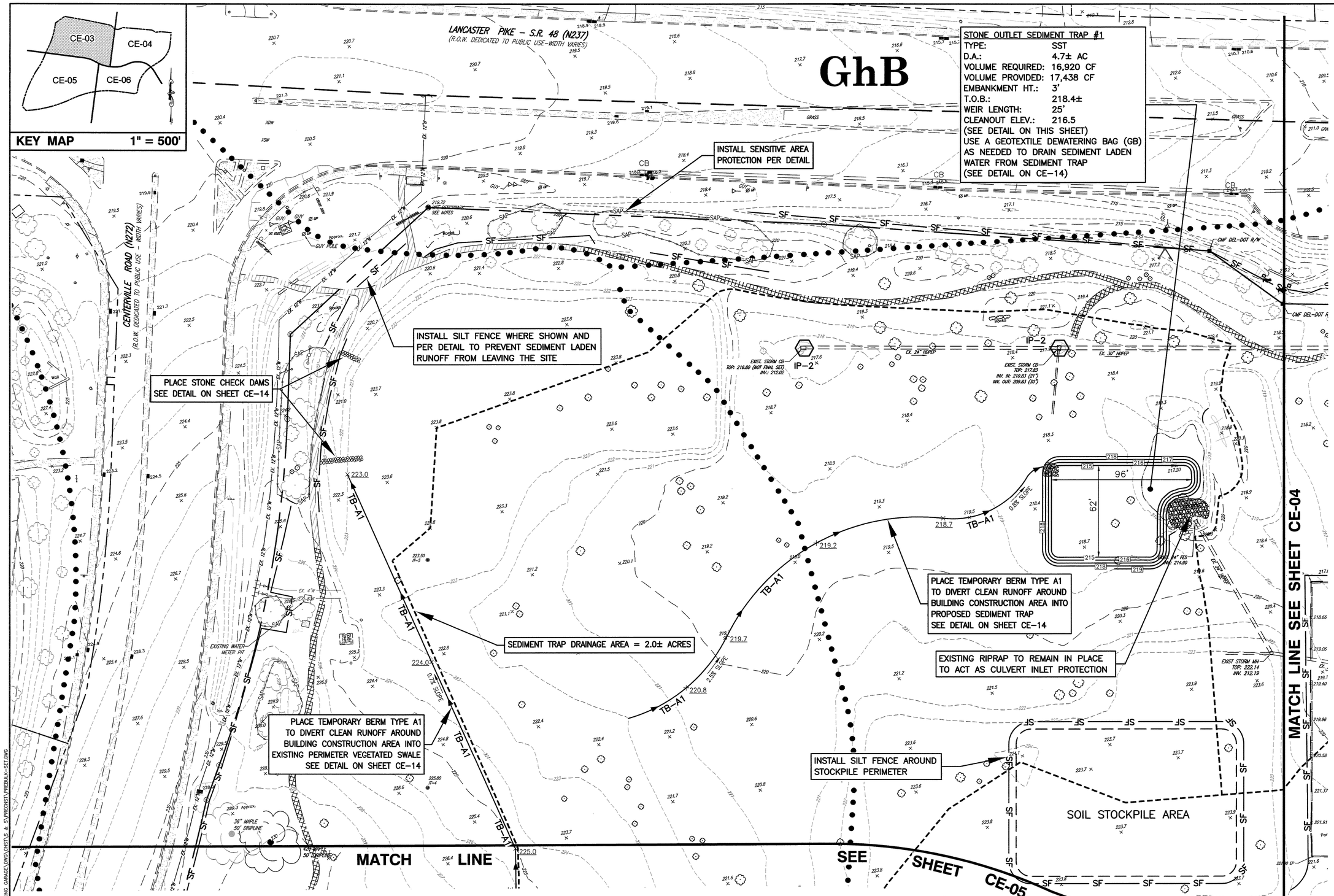

CONCRETE WASHOUT AND STAGING AREA LOCATION WILL BE IDENTIFIED AT THE PRE–CONSTRUCTION MEETING.

ENGINEERING APPROVAL
Jan 28, 2016
REVIEWED BY
Michael Clendaniel

Know what's below. Call before you dig.
MISS UTILITY PHONE 1–800–282–8555
PROTECT YOURSELF, GIVE THREE WORKING DAYS NOTICE

REVISIONS	CHECKED BY
1. REVISED SEDIMENT BASIN LOCATION PER WICKLEN REQUEST	11–10–15 TCW
2. REV. PER NCC ENGINEERING COMMENTS DATED 11–06–15	1–05–16 TCW
3. ISSUED FOR CONSTRUCTION 1–27–2016	1–27–16 TCW

APPLICATION NO. 2015–0556–S(S)
PRE–CONSTRUCTION SITE STORMWATER MANAGEMENT PLANS
FOR
THE COMMONS AT LITTLE FALLS
SEDIMENT & STORMWATER MANAGEMENT PLANS
CHRISTIANA HUNDRED – NEW CASTLE COUNTY, DELAWARE

OWNER
CSC SPECTRUM LITTLE FALLS, LLC & NWC–SPE LLC
C/O TRIDENT PROPERTIES GROUP
1980 SUMMEYTOWN PIKE, SUITE 240
LANSDALE, PA 19446
(215) 855–9100

Landmark Science & Engineering
NEW CASTLE, DE (302) 323-9077
DOVER, DE (302) 734-9597
HAVRE DE GRACE, MD (410) 939-2144
100 WEST COMMONS BOULEVARD, SUITE 301
NEW CASTLE, DELAWARE 19720
PHONE: (302) 323-9077 • FAX: (302) 323-9461
INFO@LANDMARK-SE.COM • WWW.LANDMARK-SE.COM

0 15 30 60
GRAPHIC SCALE

THIS DRAWING AND THE DESIGN SHOWN ARE THE PROPERTY OF LANDMARK SCIENCE AND ENGINEERING AND SHALL NOT BE REPRODUCED OR TRANSFERRED WITHOUT PERMISSION.

THIS DRAWING DOES NOT INCLUDE NECESSARY COMPONENTS FOR CONSTRUCTION SAFETY. COMPLIANCE WITH THE OCCUPATIONAL SAFETY AND HEALTH ACT OF 1970 AND ALL RULES AND REGULATIONS IS STRICTLY ENFORCED.

DRAWN BY: ALL	SCALE: 1"=30'		
DESIGNED BY: TCW/JAV	DATE: 8/26/15		
CHECKED BY: TCW	LAST MODIFIED 1/27/16		
COMM. NO. C1115–15	FILE NO.: XXX		
DRAWING NAME: PREBULK–SET.DWG		SHEET NO. CE–03 of 21	

CE-03

© 2016 LANDMARK SCIENCE & ENGINEERING

P:\C1115–15 THE COMMONS AT LITTLE FALLS PARKING GARAGE\DWG\CNST\S & S\PRECNST\PREBULK–SET.DWG

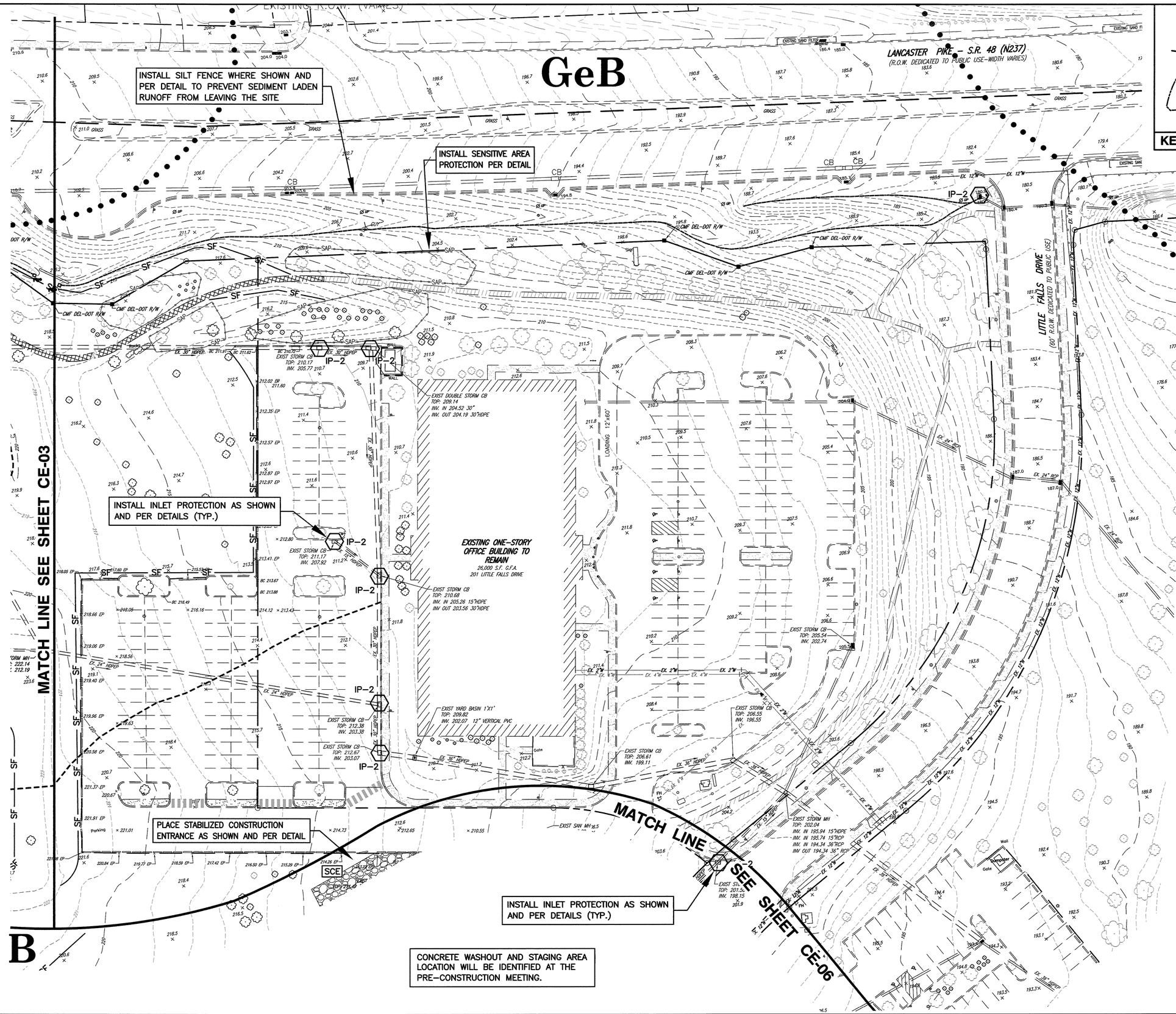

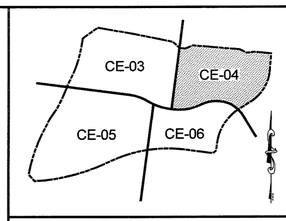

ENGINEERING
APPROVAL
Jan 28, 2016
REVIEWED BY
Michael Clendaniel

Know what's below.
Call before you dig.
MISS UTILITY PHONE 1-800-282-8555
PROTECT YOURSELF, GIVE THREE WORKING DAYS NOTICE

REVISIONS	CHECKED BY	DATE
1. REV. PER NCC ENGINEERING COMMENTS DATED 11-06-15	TCW	1-06-16
2. ISSUED FOR CONSTRUCTION 1-27-2016	TCW	1-27-16

APPLICATION NO. 2015-0556-S(S)
PRE-CONSTRUCTION SITE STORMWATER MANAGEMENT PLANS
FOR
THE COMMONS AT LITTLE FALLS
SEDIMENT & STORMWATER MANAGEMENT PLANS
CHRISTIANA HUNDRED – NEW CASTLE COUNTY, DELAWARE

OWNER
CSC SPECTRUM LITTLE FALLS, LLC & NWC-SPE LLC
C/O CHRISTIAN PROPERTIES, INC.
1990 SUMNEYTOWN PIKE, SUITE 240
LANSDALE, PA 19446
(215) 855-5100

Landmark Science & Engineering
100 WEST COMMONS BOULEVARD, SUITE 301
NEW CASTLE, DELAWARE 19720
PHONE - (302) 323-9377 • FAX - (302) 323-9461
INFO@LANDMARK-SECOM • WWW.LANDMARK-SECOM
NEW CASTLE, DE (302) 323-9377
DOVER, DE (302) 734-9597
HAVRE DE GRACE, MD (410) 939-2144

GRAPHIC SCALE 0 15 30 60

DRAWN BY: ALL	SCALE: 1"=30'		
DESIGNED BY: TCW/JAV	DATE: 8/26/15		
CHECKED BY: TCW	LAST MODIFIED 1/27/16		
COMM. NO. C1115-15	FILE NO.: XXX		
DRAWING NAME: PREBULK-SET.DWG	SHEET NO. CE-04 of 21		

CE-04

THIS DRAWING AND THE DESIGN SHOWN ARE THE PROPERTY OF LANDMARK SCIENCE AND ENGINEERING AND SHALL NOT BE REPRODUCED, COPIED OR USED WITHOUT WRITTEN PERMISSION.

THIS DRAWING DOES NOT INCLUDE NECESSARY COMPONENTS FOR CONSTRUCTION SAFETY. COMPLIANCE WITH THE OCCUPATIONAL SAFETY AND HEALTH ACT OF 1970 AND THE RULES AND REGULATIONS THERETO APPLICABLE.

© 2016 LANDMARK SCIENCE & ENGINEERING

P:\C1115-15 THE COMMONS AT LITTLE FALLS PARKING GARAGE\DWG\CONST\S & S\PRECONST\PREBULK-SET.DWG

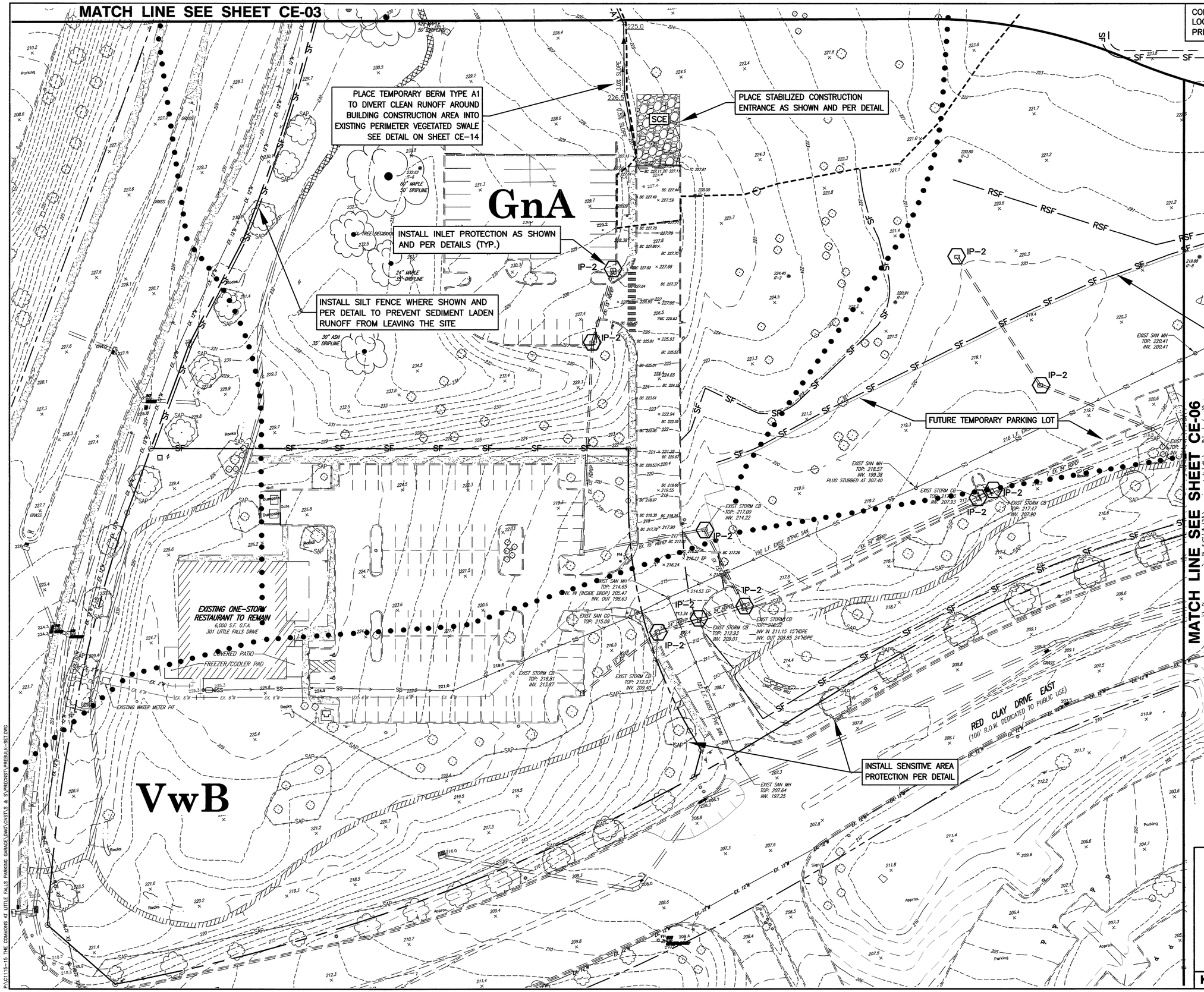

CONCRETE WASHOUT AND STAGING AREA LOCATION WILL BE IDENTIFIED AT THE PRE-CONSTRUCTION MEETING.

ENGINEERING
APPROVAL
Jan 28, 2016
REVIEWED BY
Michael Clendaniel

811
Know what's below.
Call before you dig.
MISS UTILITY PHONE 1-800-282-8555
PROTECT YOURSELF, GIVE THREE WORKING DAYS NOTICE

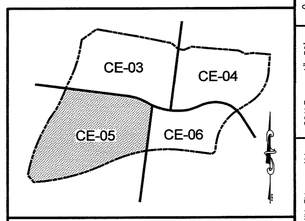

KEY MAP 1" = 500'

APPLICATION NO. 2015-0556-S(S)
PRE-CONSTRUCTION SITE STORMWATER MANAGEMENT PLANS
FOR
THE COMMONS AT LITTLE FALLS
SEDIMENT & STORMWATER MANAGEMENT PLANS
CHRISTIANA HUNDRED - NEW CASTLE COUNTY, DELAWARE

OWNER
CSC SPECTRUM LITTLE FALLS, LLC & NWC-SPE LLC
C/O TREFOIL PROPERTIES LP
1690 SUMNEYTOWN PIKE, SUITE 240
LANSDALE, PA 19446
(215) 855-5100

Landmark Science & Engineering
100 WEST COMMONS BOULEVARD, SUITE 301
NEW CASTLE, DELAWARE 19720
PHONE: (302) 323-9377 • FAX: (302) 323-9461
INFO @ LANDMARK-SE.COM • WWW.LANDMARK-SE.COM

NEW CASTLE, DE (302) 323-9377
DOVER, DE (302) 734-9597
HAVRE DE GRACE, MD (410) 939-2144

REVISIONS
1. REV. PER NCC ENGINEERING COMMENTS DATED 11-06-15
2. ISSUED FOR CONSTRUCTION 1-27-2016

CHECKED BY TCW 1-06-16 TCW 1-27-16

0 15 30 60
GRAPHIC SCALE

THIS DRAWING AND THE DESIGN SHOWN ARE THE EXCLUSIVE PROPERTY OF LANDMARK SCIENCE AND ENGINEERING AND SHALL NOT BE ALTERED OR COPIED WITHOUT WRITTEN PERMISSION.

THIS DRAWING DOES NOT INCLUDE NECESSARY COMPONENTS FOR CONSTRUCTION SAFETY.

ALL CONSTRUCTION MUST BE DONE IN COMPLIANCE WITH THE OCCUPATIONAL SAFETY AND HEALTH ACT OF 1970 AND THE RULES AND REGULATIONS THERETO APPURTENANT

DRAWN BY: ALL	SCALE: 1"=30'
DESIGNED BY: TCW/JAV	DATE: 8/26/15
CHECKED BY: TCW	LAST MODIFIED 1/27/16
COMM. NO. C1115-15	FILE NO.: XXX
DRAWING NAME: PREBULK-SET.DWG	

CE-05
SHEET NO. CE-05 of 21

© 2016 LANDMARK SCIENCE & ENGINEERING

P:\C1115-15 THE COMMONS AT LITTLE FALLS PARKING GARAGE\DWG\CNST\S & S\PRECNST\PREBULK-SET.DWG

ENGINEERING
APPROVAL
Jan 28, 2016
REVIEWED BY
Michael Clendaniel

LEGEND

- EXISTING EDGE OF HOT-MIX PAVEMENT
- 159 — EXISTING GROUND CONTOUR
- EXISTING TREE LINE
- EX 18"RCP — EXISTING STORM DRAINAGE SYSTEM
- SS — EXISTING SANITARY SEWER
- EX 12"W — EXISTING WATER MAIN
- EXISTING P.C.C. CURB
- EXISTING BUILDING
- LOD — PROPOSED LIMIT OF DISTURBANCE
- SF — PROPOSED SILT FENCE
- SCE — PROPOSED STABILIZED CONSTRUCTION ENTRANCE
- IP-2 — PROPOSED INLET PROTECTION

CONCRETE WASHOUT AND STAGING AREA LOCATION WILL BE IDENTIFIED AT THE PRE-CONSTRUCTION MEETING.

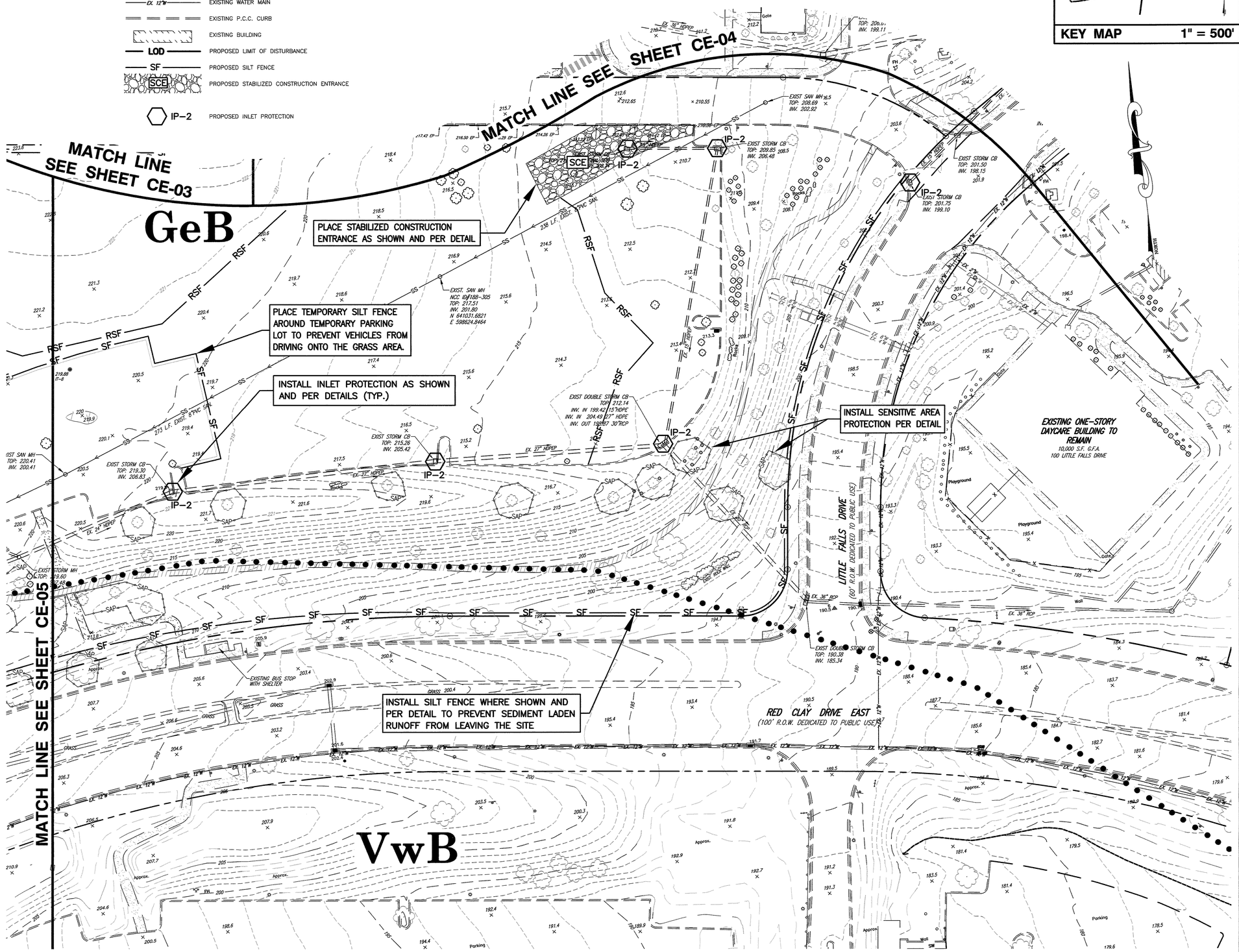

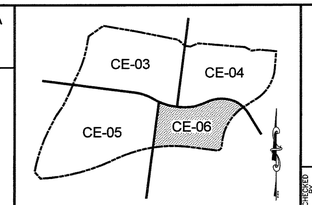

KEY MAP 1" = 500'

REVISIONS	CHECKED
1. REV. PER NCC ENGINEERING COMMENTS DATED 11-06-15	TCW 1-08-16
2. ISSUED FOR CONSTRUCTION 1-27-2016	TCW 1-27-16

APPLICATION NO. 2015-0556-S(S)
PRE-CONSTRUCTION SITE STORMWATER MANAGEMENT PLANS
FOR
THE COMMONS AT LITTLE FALLS
SEDIMENT & STORMWATER MANAGEMENT PLANS
CHRISTIANA HUNDRED - NEW CASTLE COUNTY, DELAWARE

OWNER:
CSC SPECTRUM LITTLE FALLS, LLC & NWC-SPE LLC
C/O TREFOIL PROPERTIES LP
1696 SUMMIT PARK, SUITE 240
LANSDALE, PA 19446
(215) 855-5100

Landmark Science & Engineering
100 WEST COMMONS BOULEVARD, SUITE 301
NEW CASTLE, DELAWARE 19720
PHONE: (302) 323-9377 • FAX: (302) 323-9461
INFO@LANDMARK-SE.COM • WWW.LANDMARK-SE.COM

NEW CASTLE, DE (302) 323-9377
DOVER, DE (302) 734-9597
HAVRE DE GRACE, MD (410) 939-2144

GRAPHIC SCALE 0 15 30 60

THIS DRAWING AND THE DESIGN SHOWN ARE THE PROPERTY OF LANDMARK SCIENCE AND ENGINEERING AND SHALL NOT BE REPRODUCED OR COPIED WITHOUT WRITTEN PERMISSION.

THIS DRAWING DOES NOT INCLUDE NECESSARY COMPONENTS FOR CONSTRUCTION SAFETY.

ALL CONSTRUCTION MUST BE DONE IN COMPLIANCE WITH THE OCCUPATIONAL SAFETY AND HEALTH ACT OF 1970 AND THE RULES AND REGULATIONS THERETO APPURTENANT.

DRAWN BY: ALL	SCALE: 1"=30'	DESIGNED BY: TCW/JAW	DATE: 8/25/15
CHECKED BY: TCW	LAST MODIFIED 1/27/16	COMM. NO. C1115-15	FILE NO.: XXX
DRAWING NAME: PREBULK-SET.DWG			

CE-06

SHEET NO. CE-06 of 21

© 2016 LANDMARK SCIENCE & ENGINEERING

811 Know what's below. Call before you dig.
MISS UTILITY PHONE 1-800-282-8555
PROTECT YOURSELF, GIVE THREE WORKING DAYS NOTICE

P:\C1115-15 THE COMMONS AT LITTLE FALLS PARKING GARAGE\DWG\CNSTS & S\PRECNST\PREBULK-SET.DWG

APPLICATION NO. 2015-0556-S
OVERALL CONSTRUCTION SITE STORMWATER MANAGEMENT PLAN
FOR
THE COMMONS AT LITTLE FALLS
SEDIMENT & STORMWATER MANAGEMENT PLANS
CHRISTIANA HUNDRED
NEW CASTLE COUNTY - DELAWARE

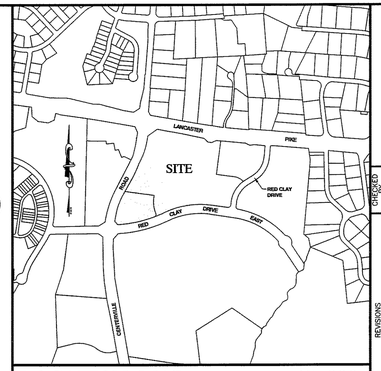

LOCATION MAP 1"=800'

REVISIONS		CHECKED
1. REV. PER NCC ENGINEERING COMMENTS DATED 11-06-15	TCW	11-06-15
2. ISSUED FOR CONSTRUCTION 1-27-2016	TCW	1-27-16

SEDIMENT AND STORMWATER INDEX OF SHEETS

COVER SHEET AND GENERAL NOTES	CE-01
RESERVED	CE-02
PRE-CONSTRUCTION SITE STORMWATER MANAGEMENT PLANS	CE-03 TO CE-06
OVERALL CONSTRUCTION SITE STORMWATER MANAGEMENT PLAN	CE-07
CONSTRUCTION SITE SITE STORMWATER MANAGMENT PLANS	CE-08 TO CE-11
CONSTRUCTION SITE DETAILS AND NOTES	CE-12 TO CE-15
POST-CONSTRUCTION STORMWATER MANAGMENT PLAN - FACILITY #1	CE-16
POST-CONSTRUCTION STORMWATER MANAGMENT PLAN - FACILITY #2 & #4	CE-17
POST-CONSTRUCTION STORMWATER MANAGMENT PLAN - FACILITY #3	CE-18
POST-CONSTRUCTION STORMWATER MANAGEMENT PLAN - FACILITY #8	CE-19
POST-CONSTRUCTION STORMWATER MANAGMENT PLAN - FACILITY #9	CE-20
POST-CONSTRUCTION STORMWATER MANAGMENT PLAN - FACILITY #10	CE-21

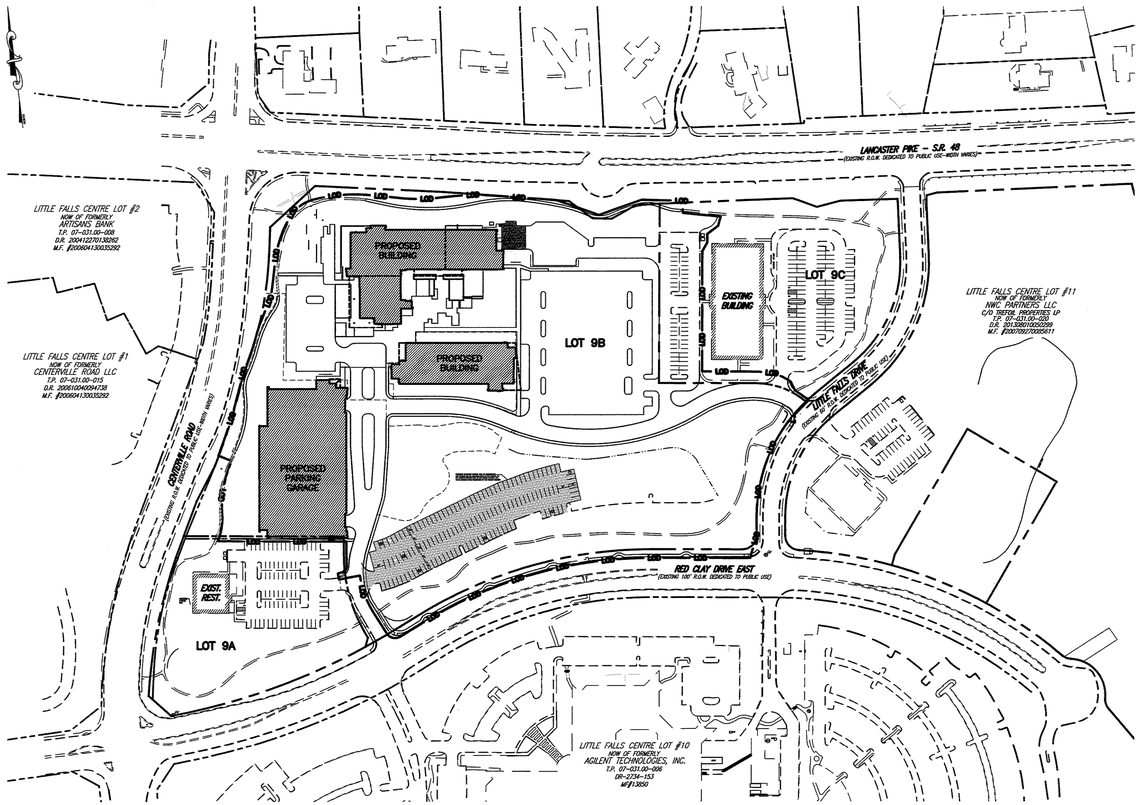

INDEX PLAN
SCALE: 1"=150'

LEGEND

- EXISTING WATER MAIN AND WATER VALVE
- PROPOSED WATER MAIN AND WATER VALVE
- PROPOSED DRAINAGE FLOW PATH
- EXISTING VERTICAL P.C.C. CURB
- PROPOSED VERTICAL P.C.C. CURB
- PROPOSED FLUSH P.C.C. CURB
- EXISTING P.C.C. SIDEWALK
- PROPOSED P.C.C. SIDEWALK (STANDARD BROOM FINISH)
- PROPOSED P.C.C. SIDEWALK (EXPOSED AGGREGATE)
- PROPOSED ASPHALT SIDEWALK
- PROPOSED ASPHALT PAVEMENT (LIGHT DUTY)
- PROPOSED ASPHALT PAVEMENT (HEAVY DUTY)
- PROPOSED MILL AND OVERLAY
- PROPOSED GRANITE PAVERS
- PROPOSED CONCRETE PAD
- EXISTING BUILDING
- PROPOSED BUILDING
- EXISTING CONTOUR
- PROPOSED CONTOUR
- EXISTING SPOT ELEVATION
- PROPOSED SPOT ELEVATION
- EXISTING SANITARY SEWER AND MANHOLE
- PROPOSED SANITARY SEWER AND MANHOLE
- EXISTING STORM DRAIN AND CATCH BASIN
- PROPOSED STORM DRAIN AND CATCH DRAIN
- EXISTING GAS MAIN AND GAS VALVE
- EXISTING FIRE HYDRANT
- PROPOSED FIRE HYDRANT
- PROPOSED FIRE LANE SIGN

CERTIFICATION OF PLAN ACCURACY

I, TED C. WILLIAMS, HEREBY CERTIFY THAT I AM A REGISTERED PROFESSIONAL ENGINEER IN THE STATE OF DELAWARE AND THAT ALL OF THE INFORMATION ON THIS PLAN IS TRUE AND CORRECT TO THE ACCURACY REQUIRED BY ACCEPTED SURVEYING STANDARDS AND PRACTICES AND BY THE NEW CASTLE COUNTY UNIFIED DEVELOPMENT CODE.

TED C. WILLIAMS, P.E.
DE P.E. #9461

1/27/16
DATE

CERTIFICATION OF OWNER

I, THE UNDERSIGNED, HEREBY CERTIFY THAT CSC SPECTRUM LITTLE FALLS, LLC & NWC-SPE LLC ARE THE OWNERS OF THE PROPERTIES WHICH ARE THE SUBJECT OF THIS PLAN AND THAT THE LAND USE ACTION PROPOSED BY THIS PLAN IS MADE AT MY DIRECTION AND THAT I AUTHORIZE THIS PLAN TO BE APPROVED PURSUANT TO THE RECORD PLAN (INST. NUMBER _____) IN ACCORDANCE WITH THE REGULATIONS OF THE NEW CASTLE COUNTY UNIFIED DEVELOPMENT CODE.

FURTHERMORE, I HEREBY CERTIFY THAT ALL LAND CLEARING, CONSTRUCTION, AND DEVELOPMENT SHALL BE DONE PURSUANT TO THE APPROVED PLAN AND THAT ALL RESPONSIBLE PERSONNEL (I.E. CLUE CARD HOLDER) INVOLVED IN THE LAND DISTURBANCE WILL HAVE A CERTIFICATE OF TRAINING PRIOR TO INITIATION OF THE PROJECT, AT A DNREC SPONSORED OR APPROVED TRAINING COURSE FOR THE CONTROL OF EROSION AND SEDIMENT DURING CONSTRUCTION. IN ADDITION, I GRANT THE DNREC SEDIMENT AND STORMWATER PROGRAM AND/OR THE RELEVANT DELEGATED AGENCY (NEW CASTLE COUNTY) THE RIGHT TO CONDUCT ON-SITE REVIEWS, AND I UNDERSTAND MY RESPONSIBILITES UNDER THE NPDES CONSTRUCTION GENERAL PERMIT, AS REFERENCED ON THIS COVER SHEET.

JAMES R. WRIGLEY, MANAGING MEMBER
CSC SPECTRUM LITTLE FALLS, LLC & NWC-SPE LLC
C/O TREFOIL PROPERTIES LP
1680 SUMNEYTOWN PIKE
LANSDALE, PA 19446
(215) 855-5100 (PHONE)
(215) 855-6583 (FAX)

1/26/16
DATE

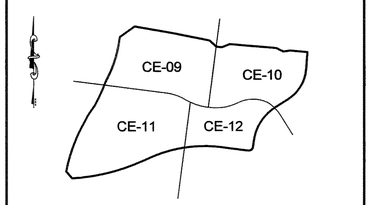

KEY MAP 1"=500'

New Castle County 1673 Delaware

ENGINEERING
APPROVAL
Jan 28, 2016
REVIEWED BY
Michael Clendaniel

811 Know what's below. Call before you dig.
MISS UTILITY PHONE 1-800-282-8555
PROTECT YOURSELF, GIVE THREE WORKING DAYS NOTICE

P:\C1115-15 THE COMMONS AT LITTLE FALLS PARKING GARAGE\DWG\CNSTS & S\CONSTR\E&S INDEX.DWG

APPLICATION NO. 2015-0556-S(S)
OVERALL CONSTRUCTION SITE STORMWATER MANAGEMENT PLAN
FOR
THE COMMONS AT LITTLE FALLS
SEDIMENT & STORMWATER MANAGEMENT PLANS
CHRISTIANA HUNDRED - NEW CASTLE COUNTY, DELAWARE

OWNER:
CSC SPECTRUM LITTLE FALLS, LLC & NWC-SPE LLC
C/O TREFOIL PROPERTIES LP
1680 SUMNEYTOWN PIKE, SUITE 240
LANSDALE, PA 19446
(215) 855-5100

Landmark Science & Engineering
NEW CASTLE, DE (302) 323-9377
DOVER, DE (302) 734-9597
HAVRE DE GRACE, MD (410) 939-2144
100 WEST COMMONS BOULEVARD, SUITE 301
NEW CASTLE, DELAWARE 19720
PHONE - (302) 323-9377 • FAX - (302) 323-9461
INFO@LANDMARK-SE.COM • WWW.LANDMARK-SE.COM

0 75 150 300
GRAPHIC SCALE

THIS DRAWING AND THE DESIGN SHOWN, ARE THE PROPERTY OF LANDMARK SCIENCE AND ENGINEERING AND SHALL NOT BE REPRODUCED OR COPIED WITHOUT WRITTEN PERMISSION.

THIS DRAWING DOES NOT INCLUDE NECESSARY COMPONENTS FOR CONSTRUCTION SAFETY.

ALL CONSTRUCTION MUST BE DONE IN ACCORDANCE WITH THE OSHA HEALTH AND SAFETY ACT OF 1970 AND THE RULES AND REGULATIONS THEREUNDER, AS AMENDED.

DRAWN BY: ALL	SCALE: 1"=150'		
DESIGNED BY: TCW/JAV	DATE: 8/26/15		
CHECKED BY: TCW	LAST MODIFIED 1/22/16		
COMM. NO. C1115-15	FILE NO.: XXX		
DRAWING NAME:E&S INDEX.DWG		SHEET NO. CE-07 of 21	CE-07

© 2016 LANDMARK SCIENCE & ENGINEERING

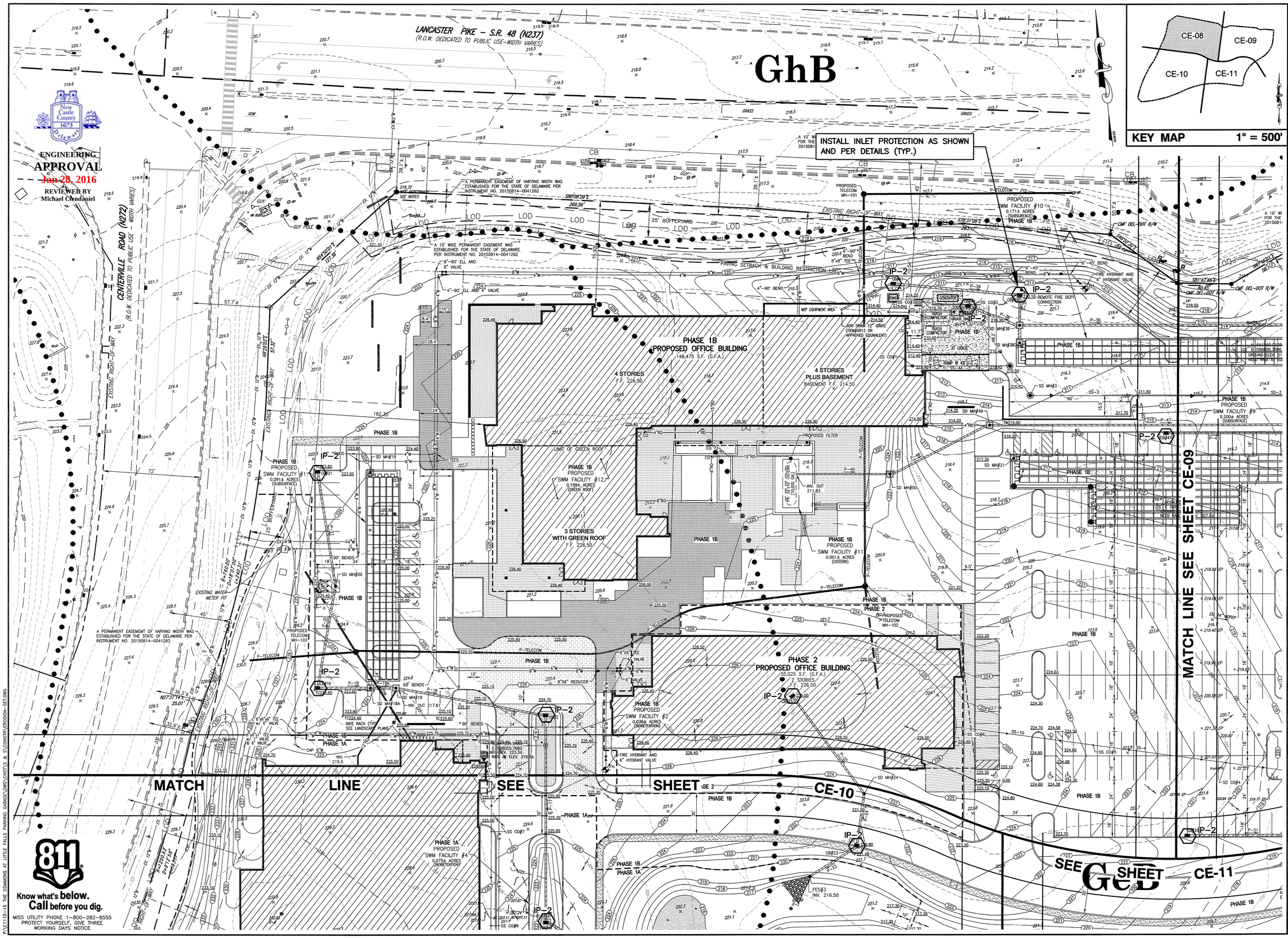

P:\C1115-15 THE COMMONS AT LITTLE FALLS PARKING GARAGE\DWG\CNSTVS & SY\CONSTR\EROSION-SET.DWG

REVISIONS		CHECKED
1. REV. PER NCC ENGINEERING COMMENTS DATED 11-06-15	TCW	11-06-15
2. ISSUED FOR CONSTRUCTION 1-27-2016	TCW	1-27-16

APPLICATION NO. 2015–0556–S(S)
CONSTRUCTION SITE SITE STORMWATER MANAGEMENT PLANS

THE COMMONS AT LITTLE FALLS

SEDIMENT & STORMWATER MANAGEMENT PLANS

CHRISTIANA HUNDRED – NEW CASTLE COUNTY, DELAWARE

FOR
OWNER:
CSC SPECTRUM LITTLE FALLS, LLC & NWC–SPE LLC
C/O TREFOIL PROPERTIES LP
1697 SUMMIT NETWORK BLVD, SUITE 240
LANSDALE, PA 19446
(215) 855–5100

Landmark Science & Engineering
100 WEST COMMONS BOULEVARD, SUITE 301
NEW CASTLE, DELAWARE 19720
PHONE - (302) 323-9377 • FAX - (302) 323-9461
INFO@LANDMARK-SE.COM • WWW.LANDMARK-SE.COM
NEW CASTLE, DE (302) 323-9377
DOVER, DE (302) 734-9597
HAVRE DE GRACE, MD (410) 939-2144

GRAPHIC SCALE 0 15 30 60

THE DRAWING AND THE DESIGN SHOWN ARE THE PROPERTY OF LANDMARK SCIENCE AND ENGINEERING AND SHALL NOT BE REPRODUCED WITHOUT WRITTEN PERMISSION.

THIS DRAWING DOES NOT INCLUDE NECESSARY COMPONENTS FOR CONSTRUCTION SAFETY.

ALL CONSTRUCTION MUST BE DONE IN COMPLIANCE WITH OSHA STANDARDS FOR SAFETY AND HEALTH ACT OF 1970 AND THE RULES AND REGULATIONS THEREUNDER APPURTENANT

DRAWN BY:	ALL	SCALE:	1"=30'
DESIGNED BY:	TCW/JAW	DATE:	8/26/15
CHECKED BY:	TCW	LAST MODIFIED	1/27/16
COMM. NO.	C1115-15	FILE NO.:	XXX
DRAWING NAME:	EROSION-SET.DWG		

SHEET NO. CE-08 of 21

CE-08

© 2016 LANDMARK SCIENCE & ENGINEERING

GeB

PLACE STABILIZATION MATTING–SLOPE (SM–S) (SSM–1 AMERICAN EXCELSIOR CURLEX I OR APPROVED EQUIVALENT) TYP.

MAINTAIN INLET PROTECTION AS SHOWN AND PER DETAILS (TYP.)

LANCASTER PIKE – S.R. 48 (N237)
(R.O.W. DEDICATED TO PUBLIC USE–WIDTH VARIES)

LITTLE FALLS DRIVE
(60' R.O.W. DEDICATED TO PUBLIC USE)

EXISTING ONE–STORY OFFICE BUILDING TO REMAIN
26,000 S.F. G.F.A.
201 LITTLE FALLS DRIVE

MATCH LINE SEE SHEET CE-08

MATCH LINE SEE SHEET CE-11

A 10' WIDE PERMANENT EASEMENT WAS ESTABLISHED FOR THE STATE OF DELAWARE PER INSTRUMENT NO. 20150814–0041262

PHASE 1B PROPOSED SWM FACILITY #10 0.108± ACRES

PHASE 1B PROPOSED SWM FACILITY #9 0.200± ACRES (SUBSURFACE)

PAVING SETBACK & BUILDING RESTRICTION LINE

EXISTING RIGHT–OF–WAY

25' BUFFERYARD

60' R.O.W.

LOADING 12'x60'

EXISTING SAND FILTER

EXIST DOUBLE STORM CB TOP: 209.14 INV. IN 204.52 30" INV. OUT 204.19 30"HDPE

EXIST STORM CB TOP: 210.68 INV. IN 205.26 15"HDPE INV OUT 203.56 30"HDPE

EXIST YARD BASIN 1'x1' INV. 202.07 12" VERTICAL PVC

EXIST STORM CB TOP: 212.38 INV. 203.38

EXIST STORM CB TOP: 212.67 INV. 203.07

EXIST STORM CB TOP: 205.54 INV. 202.74

EXIST STORM CB TOP: 206.55 INV. 196.55

EXIST STORM CB TOP: 206.64 INV. 199.11

EXIST STORM CB TOP: 201.75 INV. 199.10

EXIST STORM CB TOP: 201.50 INV. 198.12

EXIST STORM MH TOP: 202.04 INV. IN 195.94 15"HDPE INV. IN 195.74 15"RCP INV. IN 194.34 36"RCP INV. OUT 194.34 36" RCP

EXIST SAN MH TOP: 208.65 INV. 202.92

FES#1 INV. 206.00

FES#2 INV. 207.00

EXIST SAN MH TOP: 209.85 INV. 203.48

EXIST 8"PVC SAN

N 641045.6472
E 598861.4441
GROUND EDEV: 211.04
NEBN RATE NT ELEV: 209.04

N 641049.6293
E 598615.5810

PHASE 1B

IP–2

Know what's below. Call before you dig.

MISS UTILITY PHONE 1–800–282–8555
PROTECT YOURSELF; GIVE THREE WORKING DAYS NOTICE

P:\C1115-15 THE COMMONS AT LITTLE FALLS PARKING GARAGE\DWG\CNST\S & S\CONSTR\EROSION-SET.DWG

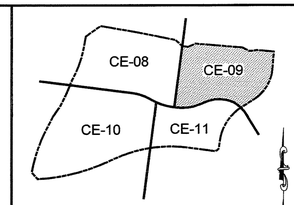

KEY MAP 1" = 500'

ENGINEERING APPROVAL
Jan 28, 2016
REVIEWED BY
Michael Clendaniel

REVISIONS		
1. REV. PER NCC ENGINEERING COMMENTS DATED 11-06-15	CDB	1-26-16
2. ISSUED FOR CONSTRUCTION 1-27-2016	CDB	1-27-16

APPLICATION NO. 2015–0556–S(S)
CONSTRUCTION SITE SITE STORMWATER MANAGEMENT PLANS
FOR
THE COMMONS AT LITTLE FALLS
SEDIMENT & STORMWATER MANAGEMENT PLANS
CHRISTIANA HUNDRED – NEW CASTLE COUNTY, DELAWARE

OWNER:
CSC SPECTRUM LITTLE FALLS, LLC & WNC–SPE LLC
C/O TREFOIL PROPERTIES LP
1690 SUMNEYTOWN PIKE, SUITE 240
LANSDALE, PA 19446
(215) 855–5100

Landmark Science & Engineering
NEW CASTLE, DE (302) 323-9377
DOVER, DE (302) 734-0897
HAVRE DE GRACE, MD (410) 939-2144
100 WEST COMMONS BOULEVARD, SUITE 301
NEW CASTLE, DELAWARE 19720
PHONE - (302) 323-9377 • FAX - (302) 323-9461
INFO@LANDMARK-SE.COM • WWW.LANDMARK-SE.COM

GRAPHIC SCALE 0 15 30 60

DRAWN BY:	ALL	SCALE:	1"=30'
DESIGNED BY:	TCW/JAW	DATE:	8/26/15
CHECKED BY:	TCW	LAST MODIFIED:	1/27/16
COMM. NO.	C1115–15	FILE NO.:	XXX
DRAWING NAME:	EROSION–SET.DWG		

CE-09

SHEET NO. CE-09 of 21

THIS DRAWING AND THE DESIGN SHOWN ARE THE EXCLUSIVE PROPERTY OF LANDMARK SCIENCE & ENGINEERING AND MUST NOT BE ALTERED OR COPIED WITHOUT WRITTEN PERMISSION.

THIS DRAWING DOES NOT INCLUDE NECESSARY DETAILS FOR CONSTRUCTION SAFETY.

ALL CONSTRUCTION MUST BE DONE IN COMPLIANCE WITH THE OCCUPATIONAL SAFETY AND HEALTH ACT OF 1970 AND ALL APPLICABLE LAWS AND REGULATIONS THERETO APPURTENANT

© 2016 LANDMARK SCIENCE & ENGINEERING

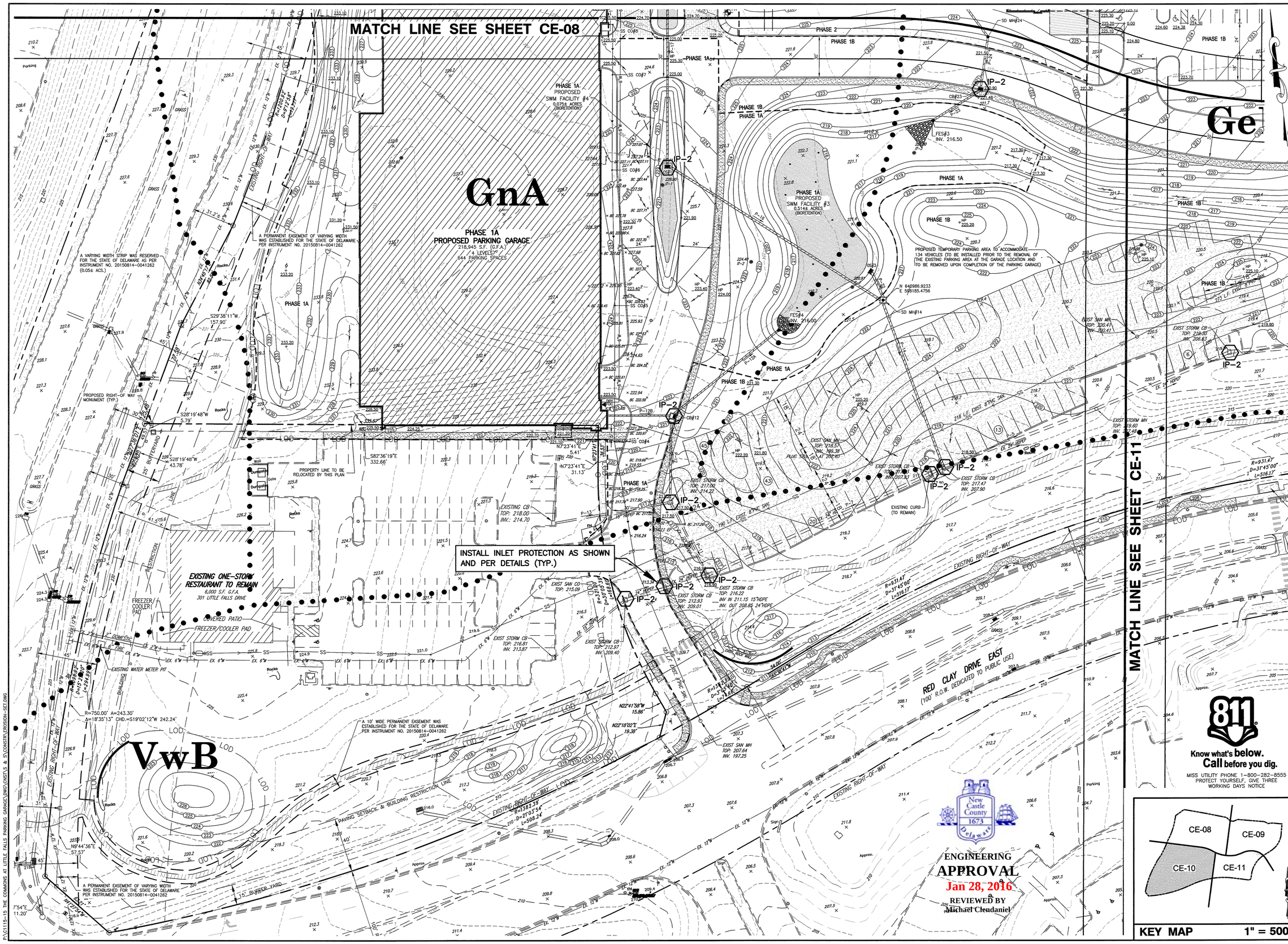

811
Know what's below.
Call before you dig.
MISS UTILITY PHONE 1-800-282-8555
PROTECT YOURSELF, GIVE THREE WORKING DAYS NOTICE

New Castle County 1673 Delaware

ENGINEERING APPROVAL
Jan 28, 2016
REVIEWED BY
Michael Clendaniel

KEY MAP 1" = 500'

REVISIONS

1. REV. PER NCC ENGINEERING COMMENTS DATED 11-06-15	TCW	1-08-16
2. ISSUED FOR CONSTRUCTION 1-27-2016	TCW	1-27-16

CHECKED BY

APPLICATION NO. 2015-0556-S(S)
CONSTRUCTION SITE SITE STORMWATER MANAGEMENT PLANS
FOR
THE COMMONS AT LITTLE FALLS
SEDIMENT & STORMWATER MANAGEMENT PLANS
CHRISTIANA HUNDRED - NEW CASTLE COUNTY, DELAWARE

OWNER
CSC SPECTRUM LITTLE FALLS, LLC & NWC-SPE LLC
C/O TREFOIL PROPERTIES LP
1690 SUMNEYTOWN PIKE, SUITE 240
LANSDALE, PA 19446
(215) 855-5100

Landmark Science & Engineering
100 WEST COMMONS BOULEVARD, SUITE 301
NEW CASTLE, DELAWARE 19720
PHONE - (302) 323-9377 • FAX - (302) 323-9461
INFO @ LANDMARK-SE.COM • WWW.LANDMARK-SE.COM
NEW CASTLE, DE (302) 323-9377
DOVER, DE (302) 734-9597
HAVRE DE GRACE, MD (410) 939-2144

0 15 30 60
GRAPHIC SCALE

THIS DRAWING AND THE DESIGN SHOWN ARE THE EXCLUSIVE PROPERTY OF LANDMARK SCIENCE AND ENGINEERING AND SHALL NOT BE ALTERED OR COPIED WITHOUT WRITTEN PERMISSION.

THIS DRAWING DOES NOT INCLUDE NECESSARY COMPONENTS FOR CONSTRUCTION SAFETY.

ALL CONSTRUCTION MUST BE DONE IN COMPLIANCE WITH THE OCCUPATIONAL SAFETY AND HEALTH ACT OF 1970 AND THE RULES AND REGULATIONS THERETO APPURTENANT

DRAWN BY: ALL	SCALE: 1"=30'
DESIGNED BY: TCW/JAV	DATE: 8/26/15
CHECKED BY: TCW	LAST MODIFIED 1/27/16
COMM. NO. C1115-15	FILE NO.: XXX
DRAWING NAME: EROSION-SET.DWG	

CE-10

SHEET NO. CE-10 of 21

© 2016 LANDMARK SCIENCE & ENGINEERING

P:\C1115-15 THE COMMONS AT LITTLE FALLS PARKING GARAGE\DWG\CNST\S & S\CONSTR\EROSION-SET.DWG

KEY MAP 1" = 500'

REVISIONS		CHECKED
1. REV. PER NCC ENGINEERING COMMENTS DATED 11-06-15	11-06-15	TCW
2. ISSUED FOR CONSTRUCTION 1-27-2016	1-27-16	JW

APPLICATION NO. 2015-0556-S(S)
CONSTRUCTION SITE SITE STORMWATER MANAGEMENT PLANS
FOR
THE COMMONS AT LITTLE FALLS
SEDIMENT & STORMWATER MANAGEMENT PLANS
CHRISTIANA HUNDRED – NEW CASTLE COUNTY, DELAWARE

CSC SPECTRUM LITTLE FALLS, LLC & NWC-SPE LLC
C/O TREFOIL PROPERTIES LP
1650 SOUTH COLLEGE AVENUE, SUITE 240
LANSDALE, PA 19446
(215) 855-5100

Landmark Science & Engineering
NEW CASTLE, DE (302) 323-9377
DOVER, DE (302) 734-9597
HAVRE DE GRACE, MD (410) 939-2144
100 WEST COMMONS BOULEVARD, SUITE 301
NEW CASTLE, DELAWARE 19720
PHONE - (302) 323-9377 • FAX - (302) 323-9461
INFO@LANDMARK-SE.COM • WWW.LANDMARK-SE.COM

GRAPHIC SCALE 0 15 30 60

THIS DRAWING AND THE DESIGN SHOWN ARE THE PROPERTY OF LANDMARK SCIENCE AND ENGINEERING AND SHALL NOT BE REPRODUCED OR COPIED WITHOUT WRITTEN PERMISSION.

THIS DRAWING DOES NOT INCLUDE NECESSARY COMPONENTS FOR CONSTRUCTION SAFETY.

ALL CONSTRUCTION MUST BE DONE IN ACCORDANCE WITH OSHA STANDARDS FOR SAFETY AND HEALTH ACT OF 1970 AND THE RULES AND REGULATIONS THEREUNDER APPURTENANT

DRAWN BY:	ALL	SCALE:	1"=50'
DESIGNED BY:	TCW/JW	DATE:	8/26/15
CHECKED BY:	TCW	DATE MODIFIED:	1/27/16
COMM. NO.	C11115-15	FILE NO.:	XXX
DRAWING NAME:	EROSION-SET.DWG		

CE-11

SHEET NO. CE-11 of 21

© 2016 LANDMARK SCIENCE & ENGINEERING

P:\C1115-15 THE COMMONS AT LITTLE FALLS PARKING GARAGE\DWG\CONST\S & S\CONSTR\EROSION-SET.DWG

Standard Detail & Specifications
Topsoiling

Construction Notes:

1. **Site Preparation** (Where Topsoil is to be added)

   Note: When topsoiling, maintain needed erosion and sediment control practices such as diversions, grade stabilization structures, berms, dikes, waterways and sediment basins.

   a. Grading - Grades on the areas to be topsoiled which have been previously established shall be maintained.

   b. Liming - Where the topsoil is either highly acid or composed of heavy clays, ground limestone shall be spread at the rate of 4-8 tons/acre (200-400 pounds per 1,000 square feet). Lime shall be distributed uniformly over designated areas and worked into the soil in conjunction with tillage operations as described in the following procedures.

   c. Tilling - After the areas to be topsoiled have been brought to grade, and immediately prior to dumping and spreading the topsoil, the subgrade shall be loosened by discing or by scarifying to a depth of a least 3 inches to permit bonding of the topsoil to the subsoil. Pack by passing a bulldozer up and down over the entire surface area of the slope to create horizontal erosion check slots to prevent topsoil from sliding down the slope.

2. **Topsoil Material and Application**

   Note: Topsoil salvaged from the existing site may often be used but it should meet the same standards as set forth in these specifications. The depth of topsoil to be salvaged shall be no more than the depth described as a representative profile for that particular soil type as described in the soil survey published by USDA-SCS in cooperation with Delaware Agricultural Experimental Station.

Source:	Symbol:	Detail No.
USDA - NRCS		DE-ESC-3.4.1 Sheet 1 of 2 Date: 03/13

Standard Detail & Specifications
Topsoiling

Construction Notes (cont.)

a. Materials - Topsoil shall be a loam, sandy loam, clay loam, silt loam, sandy clay loam, loamy sand or other soil as approved by an agronomist or soil scientist. It shall not have a mixture of contrasting textured subsoil and contain no more than 5 percent by volume of cinders, stones, slag, coarse fragment, gravel, sticks, roots, trash or other extraneous materials larger than 1-1/2 inches in diameter. Topsoil must be free of plants or plant parts of bermudagrass, quackgrass, Johnsongrass, nutsedge, poison ivy, thistles, or others as specified. All topsoil shall be tested by a reputable laboratory for organic matter content, pH and soluble salts. A pH of 6.0 to 7.5 and an organic content of not less than 1.5 percent by weight is required. If pH value is less than 6.0 lime shall be applied and incorporated with the topsoil to adjust the pH to 6.5 or higher. Topsoil containing soluble salts greater than 500 parts per million shall not be used.

Note: No sod or seed shall be placed on soil which has been treated with soil sterilants or chemicals used for weed control until sufficient time has elapsed to permit dissipation of toxic materials.

b. Grading - The topsoil shall be uniformly distributed and compacted to a minimum of four (4) inches. Spreading shall be performed in such a manner that sodding or seeding can proceed with a minimum of additional soil preparation and tillage. Any irregularities in the surface resulting from topsoiling or other operations shall be corrected in order to prevent the formation of depressions or water pockets. Topsoil shall not be placed while in a frozen or muddy condition, when the subgrade is excessively wet, or in a condition that may otherwise be detrimental to proper grading and seedbed preparation.

Note: Topsoil substitutes or amendments as approved by a qualified agronomist or soil scientist, may be used in lieu of natural topsoil. Compost material used to improve the percentage of organic matter shall be provided by a certified supplier.

Compost amendments that are intended to meet specific post-construction stormwater management goals shall further meet the requirements of **Appendix 3.06.2 Post Construction Stormwater Management BMP Standards and Specifications, Section 14.0 Soil Amendments.**

Source:	Symbol:	Detail No.
USDA - NRCS		DE-ESC-3.4.1 Sheet 2 of 2 Date: 03/13

Standard Detail & Specifications
Concrete Washout

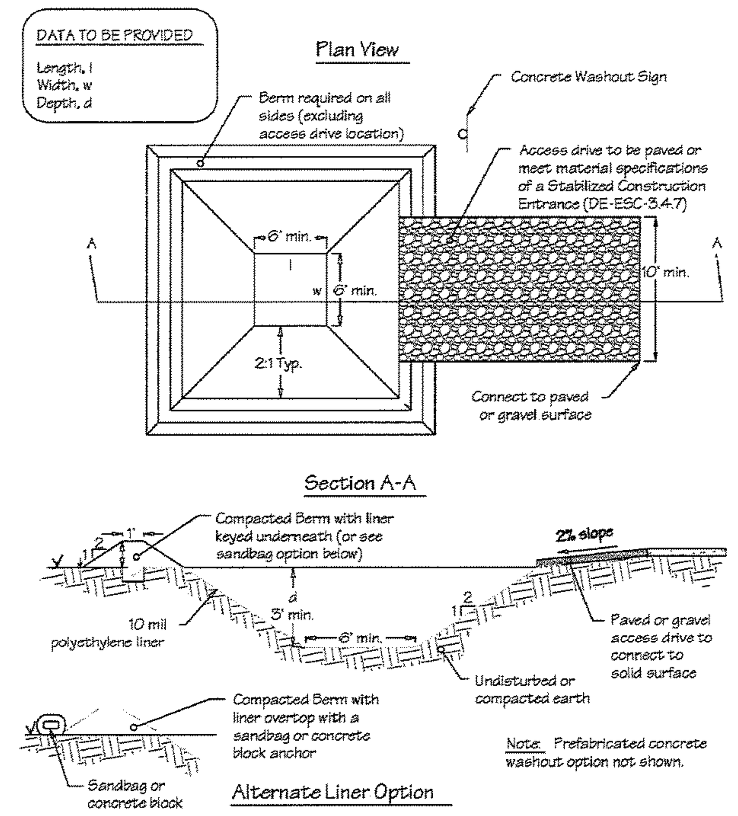

Source:	Symbol:	Detail No.
Adapted from Colorado Urban Storm Drainage Criteria Manual, Vol 3	CW	DE-ESC-3.6.2 Sheet 1 of 2 Date: 03/13

Standard Detail & Specifications
Concrete Washout

Construction Notes:

1. Locate washout area a minimum of 50 feet from open channels, stormdrain inlets, wetlands or waterbodies.
2. Locate washout area so that it is accessible to concrete equipment (service with a minimum 10 foot wide gravel accessway), but so it is not in a highly active construction area causing accidental damage.
3. Minimum dimensions for prefabricated units are 4 feet by 4 feet by 1 foot deep with a minimum 4mil polyethylene plastic liner. Minimum dimensions for constructed concrete washout areas are 6 feet by 6 feet by 3 feet deep, with a minimum 10mil polyethylene liner, 2:1 side slopes, and a 1 foot high by 1 foot wide compacted fill berm.
4. The liner must be free of tears or holes and placed over smooth surfaces to prevent puncturing. For excavated washouts, anchor the liner underneath the berm or overtop with sandbags or concrete blocks to hold in place.
5. Provide a sign designating the washout area, and for large construction sites, provide signs throughout directing traffic to its location.
6. Allow washed out concrete mixture to harden through evaporation of the wastewater. Once the facility has reached 75 percent of its capacity, remove the hardened concrete by reusing the broken aggregate onsite, recycling, or disposing of offsite. The hardened material can be buried on site with minimum of 1 foot of clean, compacted fill.
7. Apply a new liner before reusing the station for additional washouts after maintenance has occurred.

Source:	Symbol:	Detail No.
Adapted from Colorado Urban Storm Drainage Criteria Manual, Vol 3	CW	DE-ESC-3.6.2 Sheet 2 of 2 Date: 03/13

Standard Detail & Specifications
Dust Control

Temporary Methods:

1. Mulches - See **DE-ESC-3.4.5**, Standard Detail and Specifications for Mulching.
2. Vegetative cover - See **DE-ESC-3.4.3**, Std. Detail and Specifications for Vegetative Stabilization.
3. Adhesives - Use on mineral soils only (not effective on muck soils). Keep traffic off these areas. The following table may be used for general guidance.

Type of Emulsion	Water Dilution	Type of Nozzle	Apply Gal/Ac.
Latex emulsion	12.5:1	Fine spray	235
Resin-in-water emulsion	4:1	Fine spray	300
Acrylic emulsion (non-traffic)	7:1	Coarse spray	450
Acrylic emulsion (traffic)	3.5:1	Coarse spray	350

4. Tillage - For emergency temporary treatment, scarify the soil surface to prevent or reduce the amount of blowing dust until a more appropriate solution can be implemented. Begin the tillage operation on the windward side of the site using a chisel-type plow for best results.
5. Sprinkling - Sprinkle site with water until the surface is moist. Repeat as needed.
6. Calcium Chloride - Apply as flakes or granular material with a spreader at a rate that will keep the soil surface moist. Re-apply as necessary.
7. Barriers - Place barriers such as soild board fences, snow fences, hay bales, etc. at right angles to the prevailing air currents at intervals of approx. 10X their height.

Permanent Methods:

1. Vegetative cover - See **DE-ESC-3.4.3**, Std. Detail and Specifications for Vegetative Stabilization.
2. Stone - Apply layer of crushed stone or coarse gravel to protect soil surface.

Source:	Symbol:	Detail No.
Adapted from VA ESC Handbook		DE-ESC-3.4.8 Sheet 1 of 1 Date: 12/03

Standard Detail & Specifications
Silt Fence

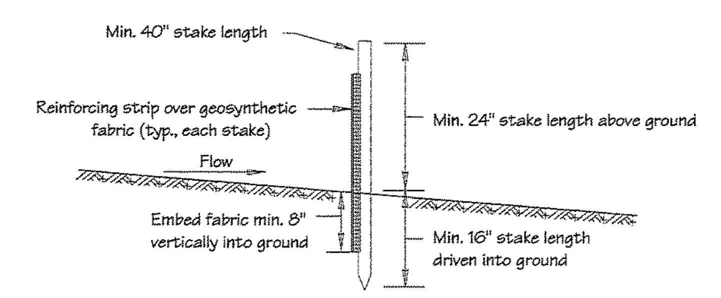

Section

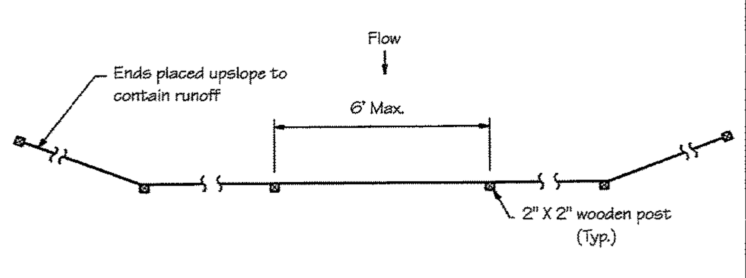

Plan

DATA
Max. controlled slope

Source:	Symbol:	Detail No.
Adapted form MD Stds. & Specs. for ESC	SF	DE-ESC-3.1.2.1 Sheet 1 of 2 Date: 6/05

Standard Detail & Specifications
Silt Fence

Construction Detail

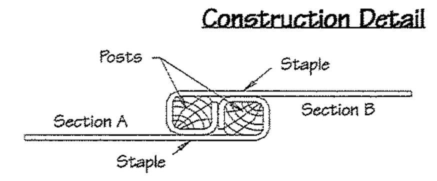

Top

Construction Notes:

1. Geosynthetic fabric to be fastened securely to fence posts with wire ties or staples.
2. When two sections of filter cloth adjoin each other they shall be overlapped by six inches and folded.
3. Maintenance shall be performed as needed and material removed when "bulges" develop in the silt fence.

Materials:

1. Stakes: Steel (either T or U) or 2" x 2" hardwood
2. Geosynthetic Fabric: Type GD-I
3. Reinforcing strip: Wooden lath, plastic strip or other approved equivalent
4. Prefabricated Unit: Geofab, Envirofence, or approved equivalent

Source:	Symbol:	Detail No.
Adapted from MD Stds. & Specs. for ESC	SF	DE-ESC-3.1.2.1 Sheet 2 of 2 Date: 6/05

Standard Detail & Specifications
Site Pollution Prevention

Notes:

The Construction Site Pollution Prevention Plan should include the following elements:

1. **Material Inventory**

   Document the storage and use of the following materials:
   a. Concrete
   b. Detergents
   c. Paints (enamel and latex)
   d. Cleaning solvents
   e. Pesticides
   f. Wood scraps
   g. Fertilizers
   h. Petroleum based products

2. **Good housekeeping practices**
   a. Store only enough product required to do the job.
   b. All materials shall be stored in a neat, orderly manner in their original labeled containers and covered.
   c. Substances shall not be mixed.
   d. When possible, all of a product shall be used up prior to disposal of the container.
   e. Manufacturers' instructions for disposal shall be strictly adhered to.
   f. The site foreman shall designate someone to inspect all BMPs daily.

3. **Waste management practices**
   a. All waste materials shall be collected and stored in securely lidded dumpsters in a location that does not drain to a waterbody.
   b. Waste materials shall be salvaged and/or recycled whenever possible.
   c. The dumpsters shall be emptied a minimum of twice per week, or more if necessary. The licensed trash hauler is responsible for cleaning out dumpsters.

Source:	Symbol:	Detail No.
Adapted from USEPA Pub. 840-B-92-002		DE-ESC-3.6.1 Sheet 1 of 3 Date: 6/05

Standard Detail & Specifications
Site Pollution Prevention

Notes (cont.)

d. Trash shall be disposed of in accordance with all applicable Delaware laws.
e. Trash cans shall be placed at all lunch spots and littering is strictly prohibited. Recycle bins shall be placed near the construction trailer.
f. If fertilizer bags can not be stored in a weather-proof location, they shall be kept on a pallet and covered with plastic sheeting which is overlapped and anchored.

4. **Equipment maintenance practices**
   a. If possible, equipment should be taken to off-site commercial facilities for washing and maintenance.
   b. If performed on-site, vehicles shall be washed with high-pressure water spray without detergents in an area contained by an impervious berm.
   c. Drip pans shall be used for all equipment maintenance.
   d. Equipment shall be inspected for leaks on a daily basis.
   e. Washout from concrete trucks shall be disposed of in a temporary pit for hardening and proper disposal.
   f. Fuel nozzles shall be equipped with automatic shut-off valves.
   g. All used products such as oil, antifreeze, solvents and tires shall be disposed of in accordance with manufacturers' recommendations and local, state and federal laws and regulations.

5. **Spill prevention practices**
   a. Potential spill areas shall be identified and contained in covered areas with no connection to the storm drain system.
   b. Warning signs shall be posted in hazardous material storage areas.
   c. Preventive maintenance shall be performed on all tanks, valves, pumps, pipes and other equipment as necessary.
   d. Low or non-toxic substances shall be prioritized for use.

Source:	Symbol:	Detail No.
Adapted from USEPA Pub. 840-B-92-002		DE-ESC-3.6.1 Sheet 2 of 3 Date: 6/05

Standard Detail & Specifications
Site Pollution Prevention

Notes (cont.)

e. Contact information for reporting spills through the DNREC 24-Hour Toll Free Number shall be prominently posted.

6. **Education**
   a. Best management practices for construction site pollution control shall be a part of regular progress meetings.
   b. Information regarding waste management, equipment maintenance and spill prevention shall be prominently posted in the construction trailer.

CONTACT INFORMATION

DNREC 24-Hour Toll Free Number	**800-662-8802**
DNREC Solid & Hazardous Waste Branch	**302-739-9403**

Source:	Symbol:	Detail No.
Adapted from USEPA Pub. 840-B-92-002		DE-ESC-3.6.1 Sheet 3 of 3 Date: 6/05

Standard Detail & Specifications
Stabilized Construct. Entrance

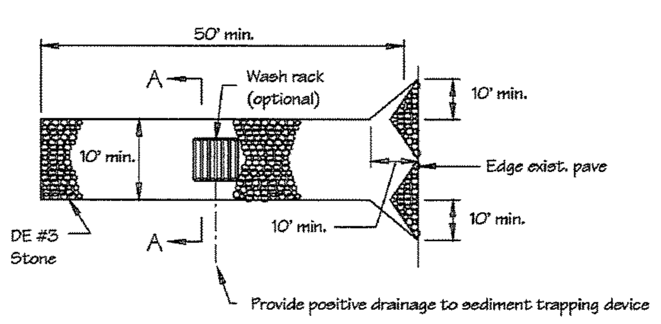

Plan

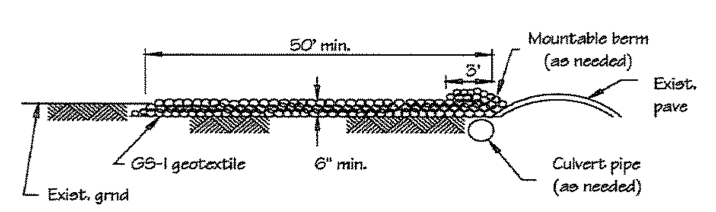

Profile

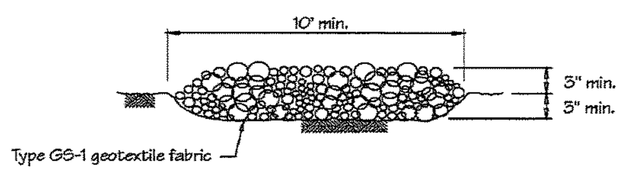

Section A-A (Std.)

Source:	Symbol:	Detail No.
Adapted from VA ESC Handbook	SCE	DE-ESC-3.4.7 Sheet 1 of 2 Date: 12/03

Standard Detail & Specifications
Stabilized Construct. Entrance

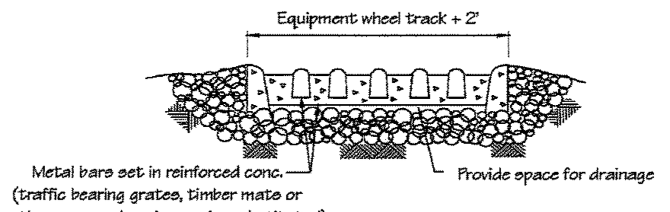

Section A-A (Opt.)

Construction Notes:

1. Stone size - Use DE #3 stone.
2. Length - As required, but not less than 50 feet (except on a single residence lot where a 30 foot minimum length would apply).
3. Thickness - Not less than size (6) inches.
4. Width - Ten (10) foot minimum, but not less than the full width at points where ingress or egress occurs.
5. Geotextile - Type GS-I; placed over the entire area prior to placing of stone.
6. Surface Water - All surface water flowing or diverted toward construction entrances shall be piped across the entrance. If piping is impractical, a mountable berm with 5:1 slopes will be permitted.
7. Maintenance - The entrance shall be maintained in a condition which will prevent tracking or flowing of sediment onto public rights-of-way. This may require periodic top dressing with additional stone as conditions demand and repair and/or cleanout of any measures used to trap sediment. All sediment spilled, dropped, washed or tracked onto public rights-of-way must be removed immediately.
8. Washing - Vehicle wheels shall be cleaned to remove sediment prior to entrance onto public rights-of-way. When washing is required, it shall be done on an area stabilized with stone and which drains into an approved sediment trapping device.
9. Inspection - Periodic inspection and needed maintenance shall be provided after each rain.

Source:	Symbol:	Detail No.
Adapted from VA ESC Handbook	SCE	DE-ESC-3.4.7 Sheet 2 of 2 Date: 12/03

Standard Detail & Specifications
Inlet Protection - Type 2

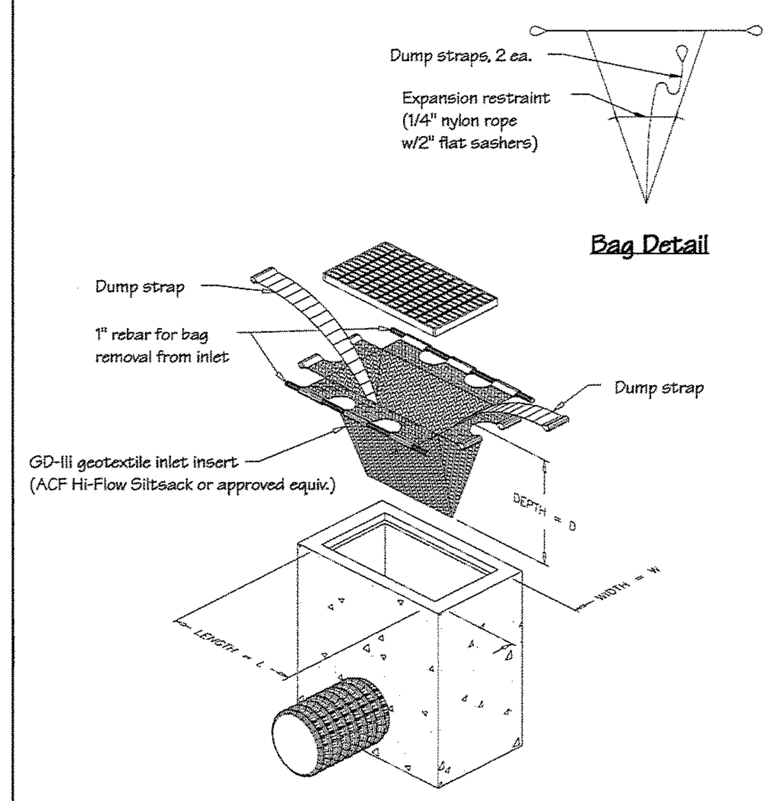

Perspective

Source:	Symbol:	Detail No.
Adapted from ACF Products, Inc.	IP-2	DE-ESC-3.1.5.2 Sheet 1 of 2 Date: 12/03

Standard Detail & Specifications
Inlet Protection - Type 2

Notes:

1. This practice shall only be used in situations in which Inlet Protection - Type 1 cannot be used due to site constraints. These include, but are not limited to partially completed parking areas, streets, roads, etc.
2. It may be necessary to transition from Type 1 to Type 2 Inlet Protection as construction proceeds.
3. For areas where there is a concern for oil run-off or spills, insert shall meet one of the above specifications with an oil-absorbant pillow or shall be made completely from an oil-absorbant material with a woven pillow.

Materials:

The geotextile inlet insert shall meet or exceed the specifications of Type GD-III geotextile in accordance with Appendix A-3 of the Delaware Erosion & Sediment Control Handbook.

Source:	Symbol:	Detail No.
Adapted from ACF Products, Inc.	IP-2	DE-ESC-3.1.5.2 Sheet 2 of 2 Date: 12/03

New Castle County 1673 Delaware

ENGINEERING
APPROVAL
Jan 28, 2016
REVIEWED BY
Michael Clendaniel

Know what's **below.**
Call before you dig.
MISS UTILITY PHONE 1-800-282-8555
PROTECT YOURSELF, GIVE THREE WORKING DAYS NOTICE

TED C. WILLIAMS — LICENSE NO. 9461 — DELAWARE PROFESSIONAL ENGINEER

REVISIONS	CHECKED BY
1. REV. PER NCC ENGINEERING COMMENTS DATED 11-06-15	TCW 1-08-16
2. ISSUED FOR CONSTRUCTION 1-27-2016	TCW 1-27-16

APPLICATION NO. 2015-0556-S(S)
CONSTRUCTION SITE DETAILS AND NOTES
FOR
THE COMMONS AT LITTLE FALLS
SEDIMENT & STORMWATER MANAGEMENT PLANS
CHRISTIANA HUNDRED – NEW CASTLE COUNTY, DELAWARE

OWNER
CSC SPECTRUM LITTLE FALLS, LLC & NWC-SPE LLC
C/O TREFOIL PROPERTIES LP
1690 SUMNEYTOWN PIKE, SUITE 240
LANSDALE, PA 19446
(215) 855-5100

NEW CASTLE, DE (302) 323-9377
DOVER, DE (302) 734-9597
HAVRE DE GRACE, MD (410) 939-2144

Landmark Science & Engineering
100 WEST COMMONS BOULEVARD, SUITE 301
NEW CASTLE, DELAWARE 19720
PHONE - (302) 323-9377 • FAX - (302) 323-9461
INFO@LANDMARK-SE.COM • WWW.LANDMARK-SE.COM

THIS DRAWING AND THE DESIGN SHOWN ARE THE EXCLUSIVE PROPERTY OF LANDMARK SCIENCE AND ENGINEERING AND SHALL NOT BE ALTERED OR COPIED WITHOUT WRITTEN PERMISSION.

THIS DRAWING DOES NOT INCLUDE NECESSARY COMPONENTS FOR CONSTRUCTION SAFETY.

ALL CONSTRUCTION MUST BE DONE IN COMPLIANCE WITH THE OCCUPATIONAL SAFETY AND HEALTH ACT OF 1970 AND THE RULES AND REGULATIONS THERETO APPURTENANT

DRAWN BY: ALL	SCALE: AS NOTED
DESIGNED BY: TCW/JAV	DATE: 8/26/15
CHECKED BY: TCW	LAST MODIFIED 1/27/16
COMM. NO. C1115-15	FILE NO.: XXX
DRAWING NAME: E&S DETAILS.DWG	
CE-12	SHEET NO. CE-12 of 21

© 2016 LANDMARK SCIENCE & ENGINEERING

P:\C1115-15 THE COMMONS AT LITTLE FALLS PARKING GARAGE\DWG\CNST\S & S\CONSTR\E&S DETAILS.DWG

Standard Detail & Specifications
Temporary Earth Berm

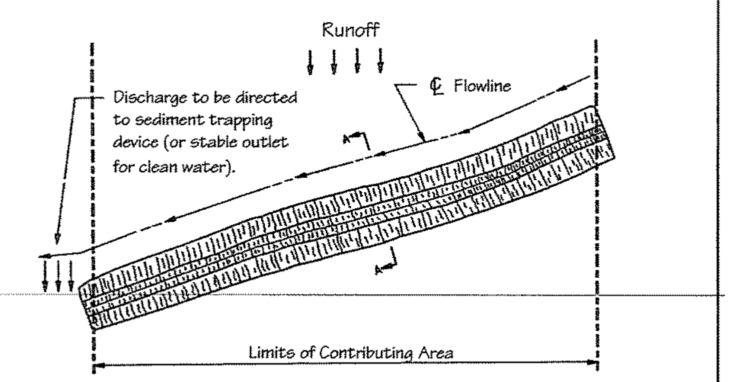

Plan

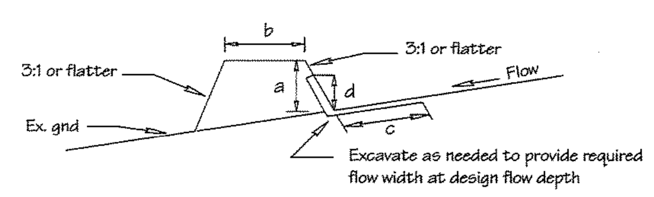

Section A-A

	Type A (5 ac. or less)	Type B (5-10 ac.)
a - BERM HEIGHT	18"	36"
b - BERM WIDTH	24"	36"
c - FLOW WIDTH	4'	6'
d - FLOW DEPTH	8"	15"

Source:	Symbol:	Detail No.
Adapted from MD Stds. & Specs. for ESC	TB-(A/B)(1-4)	DE-ESC-3.3.2 Sheet 1 of 2 Date: 12/03

Standard Detail & Specifications
Stone Outlet Sediment Trap

DATA

Drainage area (D.A.) 2.5± ACS.
Required storage (V_s) 9000 CF
Design dimensions (L x W x D) 91'x34'x3'
Embankment height (H) 2 FEET
Weir length (L_w) 25 FEET

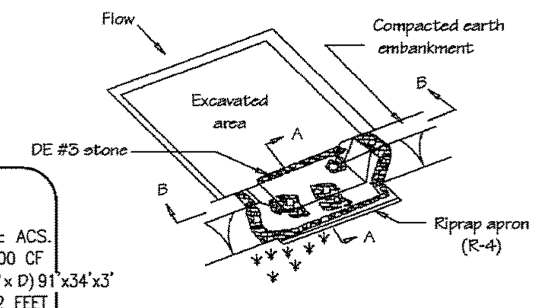

Perspective

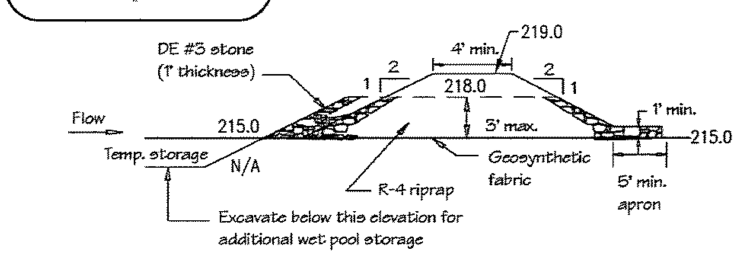

Section A-A

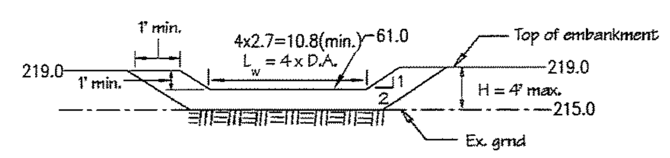

Section B-B

Source:	Symbol:	Detail No.
Adapted from MD Stds. & Specs. for ESC	SST	DE-ESC-3.1.3.2 Sheet 1 of 2 Date: 6/05

Standard Detail & Specifications
Riprap Outlet Protection - 2

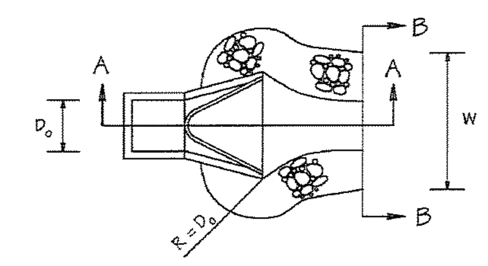

Plan

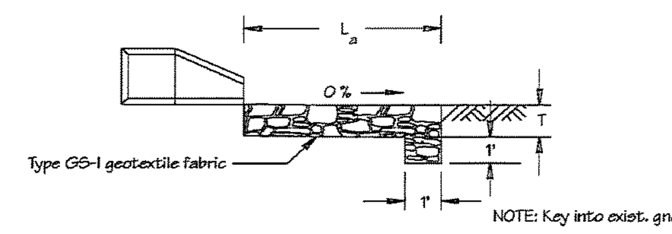

Section A-A

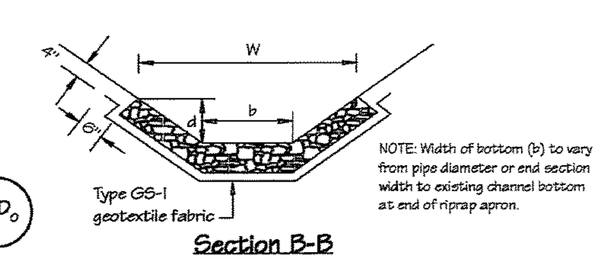

$T_w \geq 0.5 D_o$

Section B-B

Source:	Symbol:	Detail No.
Adapted from MD E&S Manual	ROP-2	DE-ESC-3.3.10.2 Sheet 1 of 2 Date: 12/03

Standard Detail & Specifications
Vegetative Stabilization

TEMPORARY SEEDING BY RATES, DEPTHS AND DATES											
Mix #	Species[6]	Seeding Rate		Optimum Seeding Dates[1] O = Optimum Planting Period; A = Acceptable Planting Period							Planting Depth[3]
				Coastal Plain			Piedmont			All	
	Certified Seed	lb/Ac[4]	lb/1000 sq.ft.	2/1-4/30	[2] 5/1-8/14	8/15-10/31	3/1-4/30	[2] 5/1-7/31	8/1-10/31	10/31-2/1	
1	Barley	125	4	O	A	O	O	A	O		1-2 inches 2-3" sandy soils
2	Oats	125	4	O	A	A	O	A	A		1-2 inches 2-3" sandy soils
3	Rye	125	4	O	A	O	O	A	O	A	1-2 inches 2-3" sandy soils
4	Perennial Ryegrass	125	4	O	A	O	O	A	O		0.5 inches 1-2" sandy soils
5	Annual Ryegrass	125	4	O	A	O	O	A	O	A	0.5 inches 1-2" sandy soils
6	Winter Wheat	125	4	O	A	O	O	A	O	A	1-2 inches 2-3" sandy soils
7	Foxtail Millet	30 PLS	0.7		O			O			0.5 inches 1-2" sandy soils
8	Pearl Millet	20 PLS	0.5		O			O			0.5 inches 1-2" sandy soils

1. Winter seeding requires 3 tons per acre of straw mulch for proper stabilization.
2. May be planted throughout summer if soil moisture is adequate or seeded area can be irrigated.
3. Applicable on slopes 3:1 or less.
4. Fifty pounds per acre of Annual Lespedeza may be added to 1/2 the seeding rate of any of the above species.
5. Use varieties currently recommended for Delaware. Contact a County Extension Office for information.
6. Warm season grasses such as Millet or Weeping Lovegrass may be used between 5/1 and 9/1 if desired. Seed at 3-5 lbs. per acre. Good on low fertility and acid areas. Seed after frost through summer at a depth of 0.5".

Source:	Symbol:	Detail No.
Delaware ESC Handbook		DE-ESC-3.4.3 Sheet 1 of 4 Date: 12/03

Standard Detail & Specifications
Vegetative Stabilization

PERMANENT SEEDING AND SEEDING DATES (cont.)											
Seeding Mixtures		Seeding Rate[1]		Optimum Seeding Dates[2] O = Optimum Planting Period A = Acceptable Planting Period							Remarks
Mix No.	Certified Seed[3]			Coastal Plain			Piedmont			All[4]	
	Poorly Drained Soils	lb/Ac	lb/1000 sq.ft.	2/1-4/30	5/1-8/14	8/15-10/31	3/1-4/30	5/1-7/31	8/1-10/31	10/31-2/1	
9	Redtop, Creeping Bentgrass, Sheep Fescue, Rough Bluegrass	75, 35, 38, 45	1.72, 0.8, 0.88, 1	O	A	O	O	A	O	Add 100 lbs/ac. Winter Rye	Quick stabilization of disturbed sites and waterways.
10	Reed Canarygrass	10	0.23	A		O	A		O		Good erosion control, wildlife cover and wetland mitigation.
	Residential Lawns										
11	Tall Fescue, Perennial Ryegrass, Kentucky Bluegrass Blend	100, 25, 30	2.3, 0.57, 0.69	O	A	O	O	A	O		High value, high maintenance, light traffic, irrigation necessary. Well drained soils, full sun.
12	Tall Fescue, Perennial Ryegrass, Sheep Fescue	100, 25, 25	2.3, 0.57, 0.57	O	A	O	O	A	O		Moderate value, low maintenance, traffic tolerant.
13	Creeping Red Fescue, Chewings Fescue, Rough Bluegrass, Kentucky Bluegrass	50, 58, 20, 20	1.15, 1.35, 0.5, 0.4	O	A	O	O	A	O		Shade tolerant, moderate traffic tolerance, moderate maintenance.
14	Creeping Red Fescue, Rough Bluegrass or Chewings Fescue	60, 80	1.15, 2.1	O	A	O	O	A	O		Shade tolerant, moisture tolerant.
15	K-31 Tall Fescue	150	3.5	O	A	O	O	A	O		Monoculture, but performs well alone in lawns. Discouraged.

1. When hydroseeding is the chosen method of application, the total rate of seed should be increased by 25%.
2. Winter seeding requires 3 tons per acre of straw mulch. Planting dates listed above are average for Delaware. These dates may require adjustment to reflect local conditions.
3. All seed shall meet the minimum purity and minimum germination percentages recommended by the Delaware Department of Agriculture. The maximum % of weed seeds shall be in accordance with Section 1, Chapter 24, Title 3 of the Delaware Code.
4. Cool season species may be planted throughout summer if soil moisture is adequate or seeded area can be irrigated.
5. All leguminous seed must be inoculated.
6. Warm season grass mix and Reed Canary Grass cannot be mowed more than 4 times per year.
7. Warm season grasses require a soil temperature of at least 50 degrees in order to germinate, and will remain dormant until then.

Source:	Symbol:	Detail No.
Delaware ESC Handbook		DE-ESC-3.4.3 Sheet 3 of 4 Date: 12/03

Standard Detail & Specifications
Temporary Earth Berm

FLOW CHANNEL STABILIZATION CHART			
Stabilization Method	Channel Grade	Type A	Type B
1	0.5-3.0%	Seed & straw mulch	Seed & straw mulch
2	3.1-5.0%	Seed & straw mulch	Seed using stab. blanket; sod; DE #2 stone
3	5.1-8.0%	Seed with stab. blanket; sod; DE #2 stone	Lined R-4 riprap
4	8.1-20%	Lined R-4 riprap	Engineering design

a. Stone to be 2 inch stone, or recycled concrete equivalent, in a layer at least 3 inches in thickness and be pressed into the soil with construction equipment.
b. Riprap to be 4-8 inches in a layer at least 8 inches thickness and pressed into the soil.
c. Approved equivalents can be substituted for any of the above materials.

Construction Notes:

1. All berms shall be compacted by earth-moving equipment.
2. All berms shall have positive drainage to an outlet.
3. Top width may be wider and side slopes may be flatter if desired to facilitate crossing construction traffic.
4. Field location should be adjusted as needed to utilize a stabilized safe outlet.
5. Earth berms shall have an outlet that functions with a minimum of erosion. Runoff shall be conveyed to a sediment trapping device such as a sediment trap or sediment basin where either the berm channel or the drainage area above the berm are not adequately stabilized.
6. Stabilization shall be: (a) In accordance with standard specifications for seed and straw mulch or straw mulch if not in seeding season, (b) Flow channel as per the chart above.
7. Periodic inspection and required maintenance must be provided after each rain event.

Source:	Symbol:	Detail No.
Adapted from MD Stds. & Specs. for ESC	TB-(A/B)(1-4)	DE-ESC-3.3.2 Sheet 2 of 2 Date: 12/03

Standard Detail & Specifications
Stone Outlet Sediment Trap

Construction Notes:

1. The area under embankment shall be cleared, grubbed and stripped of any vegetation and root mat. The pool area shall be cleared.
2. The fill material for the embankment shall be free of roots and other woody vegetation as well as over-sized stones, rocks, organic material or other objectionable material. The embankment shall be compacted by traversing with equipment while it is being constructed.
3. The volume of sediment storage shall be 3600 cubic feet per acre of drainage area in addition to any storage provided in the form of a permanent wet pool. The plan shall include an approved means of dewatering the wet pool for necessary maintenance or removal.
4. All fill slopes shall be 2:1 or flatter, cut slopes 1:1 or flatter.
5. The stone used in the outlet shall be small riprap (R-4) along with a 1' thickness of DE #3 aggregate placed on the up-grade side on the small riprap or embedded filter cloth in the riprap.
6. Sediment shall be removed and trap restored to its original dimensions when the sediment has accumulated to 1/2 the design depth of the trap.
7. The structure shall be inspected after each rain and repairs made as needed.
8. **An approved dewatering device shall be considered an integral part of the trap. Dewatering operations shall be conducted in accordance with any and all regulatory requirements.**
9. Construction operations shall be carried out in such a manner that erosion and water pollution are minimized. Disturbed areas shall be stabilized in accordance with the Standards and Specifications for Vegetative Stabilization contained in this Handbook.
10. The structure shall only be removed when the contributing drainage area has been properly stabilized.
11. OPTIONAL: A one foot layer of DE #3 stone may be placed on the upstream side of the riprap in place of the embedded filter cloth.

MAXIMUM DRAINAGE AREA: 5 ACRES

Source:	Symbol:	Detail No.
Adapted from MD Stds. & Specs. for ESC	SST	DE-ESC-3.1.3.2 Sheet 2 of 2 Date: 6/05

Standard Detail & Specifications
Riprap Outlet Protection - 2

DATA	ROP#1	ROP#2
Pipe diameter (D_o)	6"	8"
Apron length (L_a)	4'	4'
Apron width (W)	3'	3'
Bottom width (b)	1'	1'
Riprap depth (d)	1'	1'
Riprap size (R No.)	R-4	R-4
Riprap thickness (T)	14"	14"

Construction Notes:

1. The subgrade for the riprap shall be prepared to the required lines and grades as shown on the plan. Any fill required in the subgrade shall be compacted to a density of approximately that of the surrounding undisturbed material.
2. The riprap shall conform to the grading limits as shown on the plan.
3. Filter cloth shall be protected from punching, cutting or tearing. Any damage other than an occasional small hole shall be repaired by placing another piece of cloth over the damaged area. All connecting joints should overlap a minimum of 1 ft. If the damage is extensive, replace the entire filter cloth.
4. Stone for the riprap or gabion outlets may be placed by equipment. Riprap shall be placed in a manner to prevent damage to the filter cloth. Hand placement will be required to the extent necessary to prevent damage to the conduits, structures, etc.

Source:	Symbol:	Detail No.
Adapted from MD E&S Manual	ROP-2	DE-ESC-3.3.10.2 Sheet 2 of 2 Date: 12/03

Standard Detail & Specifications
Vegetative Stabilization

PERMANENT SEEDING AND SEEDING DATES											
Seeding Mixtures		Seeding Rate[1]		Optimum Seeding Dates[2] O = Optimum Planting Period A = Acceptable Planting Period							Remarks
Mix No.	Certified Seed[3]			Coastal Plain			Piedmont			All[4]	
	Well Drained Soils	lb/Ac	lb/1000 sq.ft.	2/1-4/30	5/1-8/14	8/15-10/31	3/1-4/30	5/1-7/31	8/1-10/31	10/31-2/1	
1	Tall Fescue, Weeping Lovegrass	140, 10	3.2, 0.23	A	O	A	A	O	A	Add 100 lbs/ac. Winter Rye	Good erosion control mix. Tolerant of low fertility soils. Lovegrass very difficult to mow. Germinates only in hot weather.
2	Deertongue, Sheep Fescue, Common Lespedeza Inoculated	30, 30, 15	0.69, 0.69, 0.35	A	O	A	A	O	A	Add 100 lbs/ac. Winter Rye	Good erosion control mix. Tolerant of low fertility soils. Good wildlife cover and food.
3	Tall Fescue (Turftype) or Strong Creeping Red Fescue or Perennial Ryegrass, Plus Redtop	50, 50, 50, 15	1.15, 1.15, 1.15, 0.34	O	A	O	O	A	O	Add 100 lbs/ac. Winter Rye	Good erosion control mix. Tall Fescue for droughty conditions. Creeping Red Fescue for heavy shade. Redtop to suppress woody vegetation.
4	Strong Creeping Red Fescue, Kentucky Bluegrass, Perennial Ryegrass or Redtop, Plus White Clover	100, 70, 15, 5, 3	2.3, 1.61, 0.35, 0.11, 0.07	O	A	O	O	A	O	Add 100 lbs/ac. Winter Rye	Suitable waterway mix. Canada Bluegrass more drought tolerant. Use Redtop for increased drought tolerance.
5	Switchgrass or Coastal Panicgrass, Big Bluestem, Little Bluestem, Indian Grass	10, 10, 5, 5, 5	0.23, 0.23, 0.11, 0.11, 0.1		O			O			Native warm-season mixture. Tolerant of low fertility soils. Drought tolerant. Poor shade tolerance. N fertilizer discouraged - weeds.
6	Tall Fescue (turftype) (Blend of 3 cultivars)	150	3.5	O	A	O	O	A	O		Managed filter strip for nutrient uptake.
7	Tall Fescue, Ky. Bluegrass (Blend), Perennial Ryegrass	150, 20, 20	3.5, 0.46, 0.46	O	A	O	O	A	O		Three cultivars of Kentucky Bluegrass. Traffic tolerant.
8	Big Bluestem, Indian Grass, Little Bluestem, Creeping Red Fescue, Plus one of: Partridge Pea, Bush Clover, Wild Indigo, Showy Tick-Trefoil	10, 10, 8, 30, 5, 3, 3, 2	0.23, 0.23, 0.18, 0.69, 0.11, 0.07, 0.07, 0.05	O	A		O	A			All species are native. Indian Grass and Bluestem have fluffy seeds. Plant with a specialized native seed drill. Creeping Red Fescue will provide erosion protection while the warm season grasses get established.

Source:	Symbol:	Detail No.
Delaware ESC Handbook		DE-ESC-3.4.3 Sheet 2 of 4 Date: 12/03

Standard Detail & Specifications
Vegetative Stabilization

Construction Notes:

1. Site Preparation
   a. Prior to seeding, install needed erosion and sediment control practices such as diversions, grade stabilization structures, berms, dikes, grassed waterways, and sediment basins.
   b. Final grading and shaping is not necessary for temporary seedings.
2. Seedbed Preparation

   It is important to prepare a good seedbed to insure the success of establishing vegetation. The seedbed should be well prepared, loose, uniform, and free of large clods, rocks, and other objectionable material. The soil surface should not be compacted or crusted.
3. Soil Amendments
   a. Lime - Apply liming materials based on the recommendations of a **soil test** in accordance with the approved nutrient management plan. If a nutrient management plan is not required, apply dolomitic limestone at the rate of 1 to 2 tons per acre. Apply limestone uniformly and incorporate into the top 4 to 6 inches of soil.
   b. Fertilizer - Apply fertilizer based on the recommendations of a **soil test** in accordance with the approved nutrient management plan. If a nutrient management plan is not required, apply a formulation of 10-10-10 at the rate of 600 pounds per acre. Apply fertilizer uniformly and incorporate into the top 4 to 6 inches of soils.
4. Seeding
   a. For **temporary stabilization**, select a mixture from **Sheet 1**. For a **permanent stabilization**, select a mixture from **Sheet 2** or **Sheet 3** depending on the conditions.
   b. Apply seed uniformly with a broadcast seeder, drill, cultipacker seeder or hydroseeder. All seed will be applied at the recommended rate and planting depth.
   c. Seed that has been broadcast should be covered by raking or dragging and then lightly tamped into place using a roller or cultipacker. If hydroseeding is used and the seed and fertilizer is mixed, they will be mixed on site and the seeding shall be done immediately and without interruption.
5. Mulching

   All mulching shall be done in accordance with detail **DE-ESC-3.4.5**.

Source:	Symbol:	Detail No.
Delaware ESC Handbook		DE-ESC-3.4.3 Sheet 4 of 4 Date: 12/03

Standard Detail & Specifications
Stone Check Dam

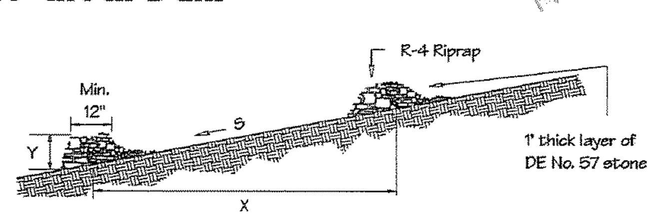

Profile

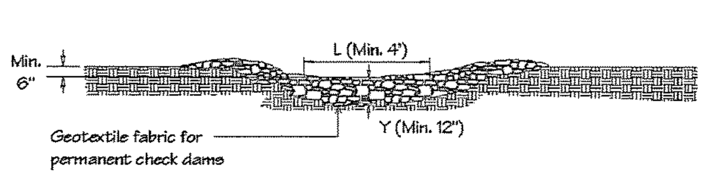

Section

DATA

Slope (S) 12"
Spacing (X) 12"
Length of weir (L) 4'
Height of stone (Y) 18"

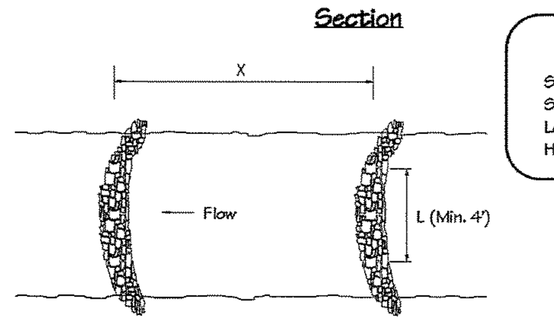

NOTE: Angle ends upstream

Plan

Source:	Symbol:	Detail No.
Adapted from MD Stds. & Specs. for ESC	SCD	DE-ESC-3.3.6 Sheet 1 of 2 Date: 6/05

Standard Detail & Specifications
Stone Check Dam

Construction Notes:

1. Swales and channels shall be prepared in accordance with the construction specifications described in the **Standards and Specifications for Temporary Berm, Temporary Swale, Vegetated Channel**, or **Diversions**.
2. The check dam shall be constructed of 4" to 8" riprap. The riprap shall be placed so that it completely covers the width of the channel.
3. The top of the check dam shall be constructed so that the center is approximately 6" lower than the outer edges, forming a weir that the water can flow across. The minimum length of weir shall be 4'.
4. The maximum height of the check dam at the center of the weir must not exceed two (2) feet.
5. Maximum spacing between dams should be the distance in the channel where the toe of the upstream dam is at the same elevation as the top of the downstream dam. (See **Standard & Specifications for Check Dams** for design chart.)

Source:	Symbol:	Detail No.
Adapted from MD Stds. & Specs. for ESC	SCD	DE-ESC-3.3.6 Sheet 2 of 2 Date: 6/05

Standard Detail & Specifications
Sensitive Area Protection

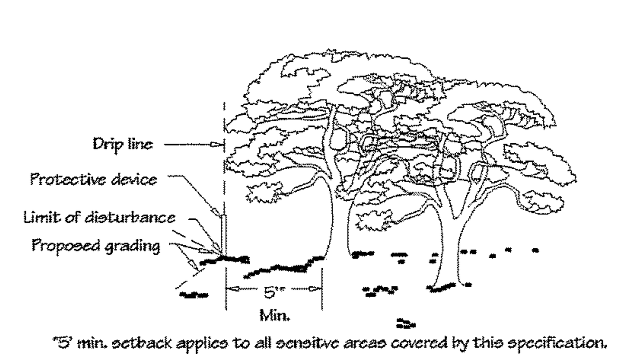

*5' min. setback applies to all sensitve areas covered by this specification.

Location of Sensitive Area Protection

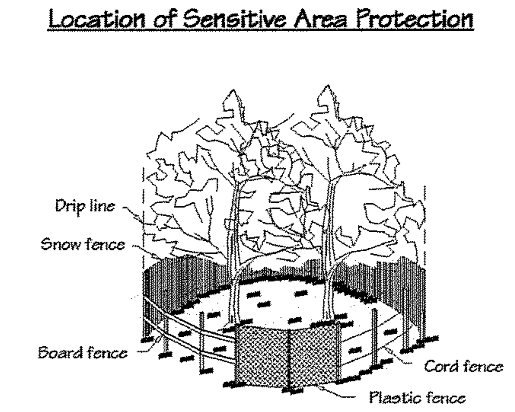

Methods of Sensitive Area Protection

Source:	Symbol:	Detail No.
Adapted from VA ESC Handbook	SAP	DE-ESC-3.7.2 Sheet 1 of 3 Date: 03/13

Standard Detail & Specifications
Sensitive Area Protection

Construction Notes:

Fencing shall be installed at the extents of all sensitive areas. For trees, the fencing shall be installed outside the dripline (mature canopy) and at no time within 5 feet of the trunk. Personnel must be instructed to honor protective devices. The devices described are suggested only, and are not intended to exclude the use of other devices which will protect the trees to be retained. If silt fence is to be used for demarcation purposes, appropriate signage shall be provided a minimum of every 20 feet denoting the area as a sensitive area protection zone.

Materials:

1. Snow Fence - Standard 40-inch high snow fence shall be placed at the limits of clearing or construction on standard steel posts set 6 feet apart.
2. Board Fence - Board fencing consisting of 4-inch square posts set securely in the ground and protruding at least 4 feet above the ground shall be placed at the limits of clearing with a minimum of two horizontal boards between posts. For tree proteciton, if it is not practical to erect a fence at the drip line, construct a triangular fence nearer the trunk. The limits of clearing will still be located at the drip line, since the root zone within the drip line will still require protection.
3. Plastic Fencing - 40-inch high "international orange" plastic (polyethylene) web fencing secured to conventional metal "T" or "U" posts driven to a minimum depth of 18 inches on 6-foot minimum centers shall be installed at the limits of clearing. The fence should have the following minimum physical qualities:

a.	Tensile yield:	Average 2,000 lbs. per 4-foot width (ASTM D638)
b.	Ultimate tensile yield:	Average 2,900 lbs. per 4-foot width (ASTM D638)
c.	Elongation at break (%):	Greater than 1000% (ASTM D638)
d.	Chemical resistance:	Inert to most chemicals and acids

Source:	Symbol:	Detail No.
Adapted from VA ESC Handbook	SAP	DE-ESC-3.7.2 Sheet 2 of 3 Date: 03/13

Standard Detail & Specifications
Sensitive Area Protection

4. Cord Fence - Posts with a minimum size of 2 inches square or 2 inches in diameter set securely in the ground and protruding at least 4 feet above the ground shall be placed at the limits of clearing with two rows of cord 1/4-inch or thicker at least 2 feet apart running between posts with strips of colored surveyor's flagging tied securely to the string at intervals no greater than 3 feet.
5. Earth Berms - Temporary earth berms shall be constructed according to specifications for a Temporary Earth Dike with the base of the berm on the sensitive area side located along the limits of clearing. Earth berms may not be used for this purpose if their presence will conflict with drainage patterns.
6. Trunk Armoring (Tree Protection Only) - As a last resort, a tree trunk can be armored with burlap wrapping and 2-inch studs wired vertically no more than 2 inches apart to a height of 5 feet encircling the trunk. If this alternative is used, the root zone within the drip line will still require protection. Nothing should ever be nailed to a tree.

Maintenance:

Fencing and armoring devices shall be in place before any excavation or grading is begun, shall be kept in good repair for the duration of construction activities, and shall be the last items removed during the final cleanup after the completion of the project.

Source:	Symbol:	Detail No.
Adapted from VA ESC Handbook	SAP	DE-ESC-3.7.2 Sheet 3 of 3 Date: 03/13

New Castle County 1673 Delaware

ENGINEERING
APPROVAL
Jan 28, 2016
REVIEWED BY
Michael Clendaniel

811
Know what's below.
Call before you dig.
MISS UTILITY PHONE 1-800-282-8555
PROTECT YOURSELF, GIVE THREE WORKING DAYS NOTICE

P:\C1115-15 THE COMMONS AT LITTLE FALLS PARKING GARAGE\DWG\CNST\S & S\CONSTR\E&S DETAILS.DWG

TED C. WILLIAMS LICENSE No 9461 PROFESSIONAL ENGINEER DELAWARE

REVISIONS	CHECKED BY
1. REV. PER NCC ENGINEERING COMMENTS DATED 11-06-15	TCW 1-08-16
2. ISSUED FOR CONSTRUCTION 1-27-2016	TCW 1-27-16

APPLICATION NO. 2015-0556-S(S)
CONSTRUCTION SITE DETAILS AND NOTES
FOR
THE COMMONS AT LITTLE FALLS
SEDIMENT & STORMWATER MANAGEMENT PLANS
CHRISTIANA HUNDRED - NEW CASTLE COUNTY, DELAWARE

OWNER
CSC SPECTRUM LITTLE FALLS, LLC & NWC-SPE LLC
C/O TREFOIL PROPERTIES LP
1690 SUMNEYTOWN PIKE, SUITE 240
LANSDALE, PA 19446
(215) 855-5100

NEW CASTLE, DE (302) 323-9377
DOVER, DE (302) 734-9597
HAVRE DE GRACE, MD (410) 939-2144

Landmark Science & Engineering
100 WEST COMMONS BOULEVARD, SUITE 301
NEW CASTLE, DELAWARE 19720
PHONE - (302) 323-9377 • FAX - (302) 323-9461
INFO@LANDMARK-SE.COM • WWW.LANDMARK-SE.COM

THIS DRAWING AND THE DESIGN SHOWN ARE THE EXCLUSIVE PROPERTY OF LANDMARK SCIENCE AND ENGINEERING AND SHALL NOT BE ALTERED OR COPIED WITHOUT WRITTEN PERMISSION.

THIS DRAWING DOES NOT INCLUDE NECESSARY COMPONENTS FOR CONSTRUCTION SAFETY.

ALL CONSTRUCTION MUST BE DONE IN COMPLIANCE WITH THE OCCUPATIONAL SAFETY AND HEALTH ACT OF 1970 AND THE RULES AND REGULATIONS THERETO APPURTENANT

DRAWN BY: ALL	SCALE: AS NOTED		
DESIGNED BY: TCW/JAV	DATE: 8/26/15		
CHECKED BY: TCW	LAST MODIFIED 1/27/16		
COMM. NO. C1115-15	FILE NO.: XXX		
DRAWING NAME: E&S DETAILS.DWG			
CE-13	SHEET NO. CE-13 of 21		

© 2016 LANDMARK SCIENCE & ENGINEERING

Standard Detail & Specifications
Construction Site Waste Mgt & Spill Control

DATA TO BE PROVIDED

Volume of Potential Pollution
Height of containment
Area of containment
Volume of containment

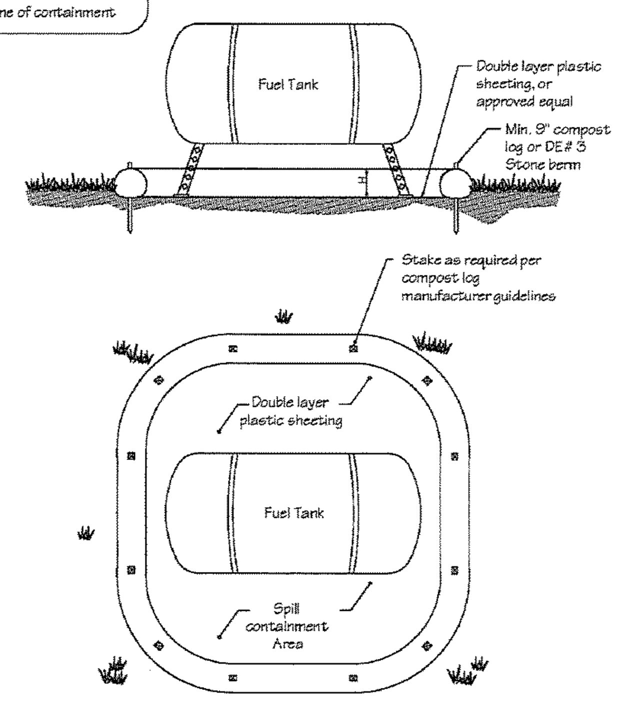

Source:	Symbol:	Detail No.
Delaware ESC Handbook		DE-ESC-3.6.1 Sheet 1 of 5 Date: 03/13

Standard Detail & Specifications
Construction Site Waste Mgt & Spill Control

Pollution Prevention – Spill Prevention

1. Fueling should only take place in signed designated areas, away from downstream drainage facilities and watercourses.
2. Fueling must be with nozzles equipped with automatic shut-off to control drips. Do not top off.
3. Protect the areas where equipment or vehicles are being repaired, maintained, fueled or parked from storm water run-on and runoff.
4. Use barriers such as berms to prevent storm water run-on and runoff, and to contain spills.
5. Place a "Fueling Area" sign next to each fueling area.
6. Store hazardous materials such as fuel, solvents, oil and chemicals in secondary containment.
7. Inspect vehicles and equipment for leaks on each day of use. Repair fluid and oil leaks immediately.
8. Absorbent spill clean-up materials and spill kits must be available in fueling areas and on fuel trucks.
9. If fueling is to take place at night, make sure the fueling area is sufficiently illuminated.
10. Properly dispose of used oil, fluids, lubricants and spill clean-up materials.

CLEAN UP SPILLS

1. If it is safe to do so, immediately contain and clean up any chemical and/or hazardous material spills.
2. Properly dispose of used oil, fluids, lubricants and spill clean-up materials.
3. Do not bury spills or wash them down with water.

LEAKS AND DRIPS

1. Use drip pans or absorbent pads at all times. Place under and around leaky equipment.
2. Do not allow oil, grease, fuel or chemicals to drip onto the ground.
3. Have spill kits and clean up material on-site.
4. Repair leaky equipment promptly or remove problem vehicles and equipment from the site. ~~Clean up contaminated soil immediately.~~
5. Store contaminated waste in sealed containers constructed of suitable material. Label these containers properly.
6. Clean up all spills and leaks. Promptly dispose of waste and spent clean up materials.

Source:	Symbol:	Detail No.
Delaware ESC Handbook		DE-ESC-3.6.1 Sheet 2 of 5 Date: 03/13

Standard Detail & Specifications
Construction Site Waste Mgt & Spill Control

Notes:

The Construction Site Pollution Prevention Plan should include the following elements:

1. ~~**Material Inventory**~~

   Document the storage and use of the following materials:
   a. Concrete
   b. Detergents
   c. Paints (enamel and latex)
   d. Cleaning solvents
   e. Pesticides
   ~~f. Wood scraps~~
   g. Fertilizers
   h. Petroleum based products

2. **Good housekeeping practices**
   a. Store only enough product required to do the job.
   b. All materials shall be stored in a neat, orderly manner in their original labeled containers and covered.
   ~~c. Substances shall not be mixed.~~
   d. When possible, all of a product shall be used up prior to disposal of the container.
   e. Manufacturers' instructions for disposal shall be strictly adhered to.
   f. The site foreman shall designate someone to inspect all BMPs daily.

3. **Waste management practices**
   a. All waste materials shall be collected and stored in securely lidded dumpsters in a location that does not drain to a waterbody.
   b. Waste materials shall be salvaged and/or recycled whenever possible.
   c. The dumpsters shall be emptied a minimum of twice per week, or more if necessary. The licensed trash hauler is responsible for cleaning out dumpsters.

Source:	Symbol:	Detail No.
Adapted from USEPA Pub. 840-B-92-002		DE-ESC-3.6.1 Sheet 3 of 5 Date: 03/13

Standard Detail & Specifications
Construction Site Waste Mgt & Spill Control

Notes (cont.)

   d. Trash shall be disposed of in accordance with all applicable Delaware laws.
   e. Trash cans shall be placed at all lunch spots and littering is strictly prohibited. Recycle bins shall be placed near the construction trailer.
   f. If fertilizer bags can not be stored in a weather-proof location, they shall be kept on a pallet and covered with plastic sheeting which is overlapped and anchored.

4. **Equipment maintenance practices**
   a. If possible, equipment should be taken to off-site commercial facilities for washing and maintenance.
   b. If performed on-site, vehicles shall be washed with high-pressure water spray without detergents in an area contained by an impervious berm.
   c. Drip pans shall be used for all equipment maintenance.
   d. Equipment shall be inspected for leaks on a daily basis.
   e. Washout from concrete trucks shall be disposed of in a temporary pit for hardening and proper disposal.
   f. Fuel nozzles shall be equipped with automatic shut-off valves.
   g. All used products such as oil, antifreeze, solvents and tires shall be disposed of in accordance with manufacturers' recommendations and local, state and federal laws and regulations.

5. **Spill prevention practices**
   a. Potential spill areas shall be identified and contained in covered areas with no connection to the storm drain system.
   b. Warning signs shall be posted in hazardous material storage areas.
   c. Preventive maintenance shall be performed on all tanks, valves, pumps, pipes and other equipment as necessary.
   d. Low or non-toxic substances shall be prioritized for use.

Source:	Symbol:	Detail No.
Adapted from USEPA Pub. 840-B-92-002		DE-ESC-3.6.1 Sheet 4 of 5 Date: 03/13

Standard Detail & Specifications
Construction Site Waste Mgt & Spill Control

Notes (cont.)

   e. Contact information for reporting spills through the DNREC 24-Hour Toll Free Number shall be prominently posted.

6. **Education**
   a. Best management practices for construction site pollution control shall be a part of regular progress meetings.
   b. Information regarding waste management, equipment maintenance and spill prevention shall be prominently posted in the construction trailer.

CONTACT INFORMATION

DNREC 24-Hour Toll Free Number	**800-662-8802**
DNREC Solid & Hazardous Waste Branch	**302-739-9403**

Source:	Symbol:	Detail No.
Adapted from USEPA Pub. 840-B-92-002		DE-ESC-3.6.1 Sheet 5 of 5 Date: 03/13

Standard Detail & Specifications
Stabilization Matting - Slope

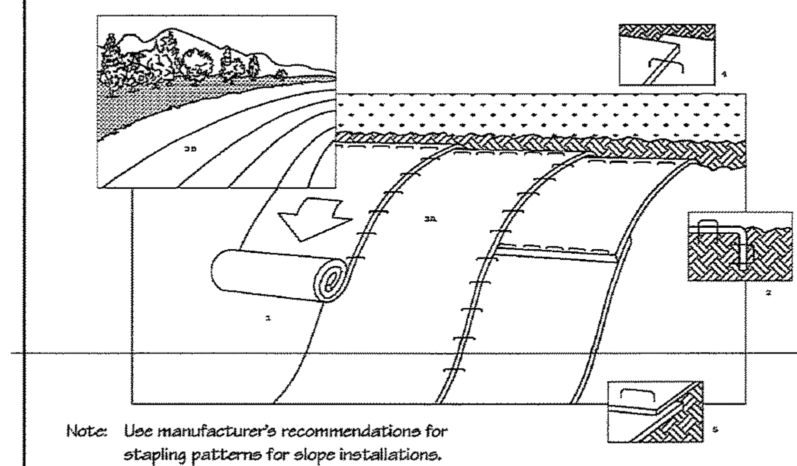

Note: Use manufacturer's recommendations for stapling patterns for slope installations.

Perspective

Construction Notes:

1. Prepare soil before installing matting, including application of lime, fertilizer, and seed.
2. Begin at the top of the slope by anchoring the mat in a 6" deep X 6" wide trench. Backfill and compact trench after stapling.
3. Roll the mats (A) down or (B) horizontally across the slope.
4. The edges of parrallel mats must be stapled with approx. 2" overlap.
5. When mats must be spliced down the slope, place mats end over end (shingle style) with approx. 4" overlap. Staple through overlapped area, approx. 12" apart.

Source:	Symbol:	Detail No.
Adapted from North American Green, Inc.	SM-S	DE-ESC-3.4.6.1 Sheet 1 of 2 Date: 6/05

Standard Detail & Specifications
Stabilization Matting - Slope

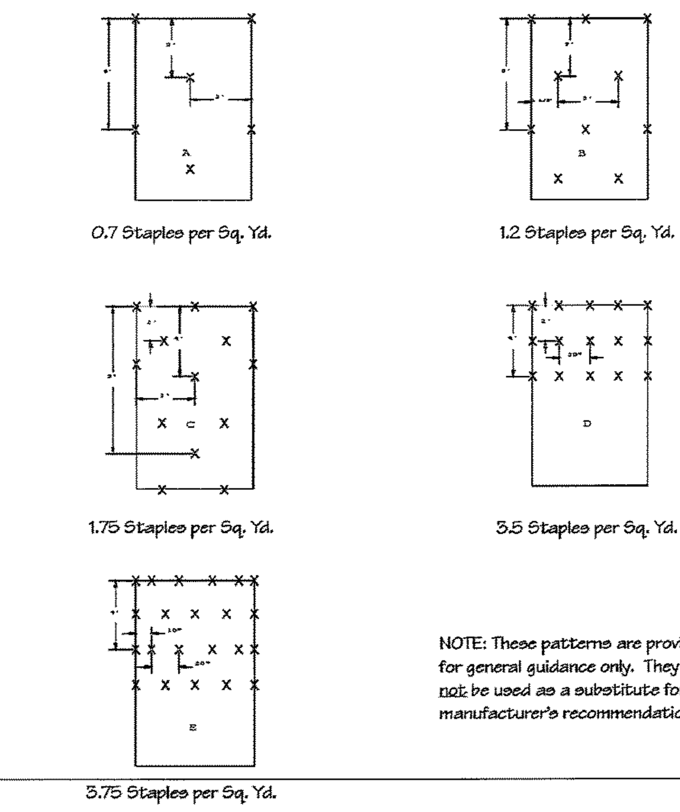

NOTE: These patterns are provided for general guidance only. They shall not be used as a substitute for manufacturer's recommendations.

Stapling Patterns

Source:	Symbol:	Detail No.
Adapted from North American Green, Inc.	SM-S	DE-ESC-3.4.6.1 Sheet 2 of 2 Date: 6/05

Standard Detail & Specifications
Soil Stockpile

DATA TO BE PROVIDED

Max. Height, h

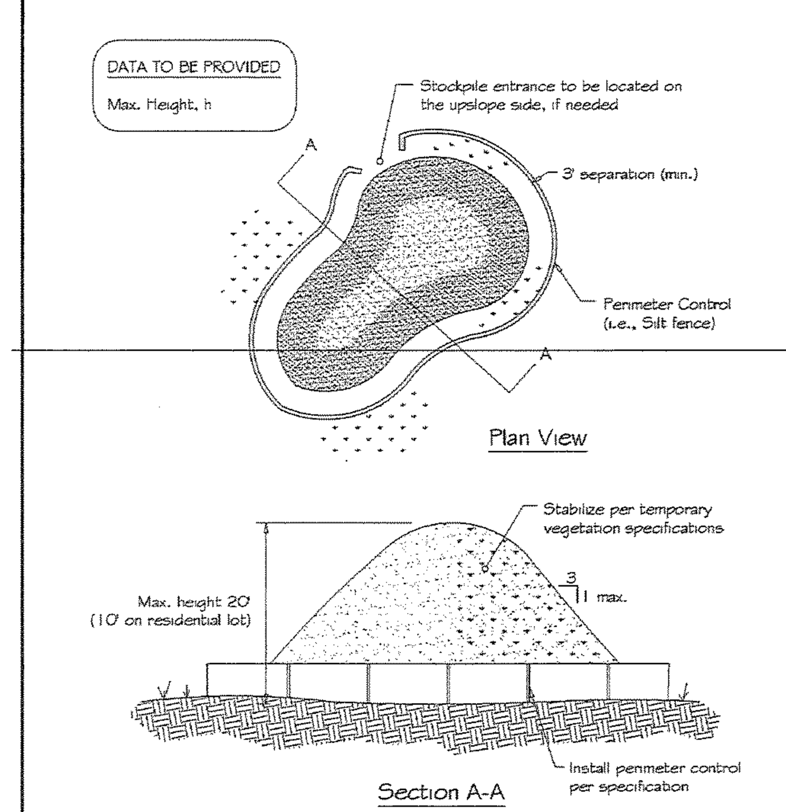

Source:	Symbol:	Detail No.
Adapted from Colorado Urban Storm Drainage Criteria Manual, Vol 3	—— SP ——	DE-ESC-3.7.3 Sheet 1 of 2 Date: 03/13

Standard Detail & Specifications
Soil Stockpile

Construction Notes:

1. Locate stockpiles so that they are 50 feet from any storm drain inlet, open channel, wetland or waterbody. Redirect any concentrated flow around the stockpile using an approved erosion and sediment control measure.
2. Secure the perimeter of the stockpile with an approved erosion and sediment control perimeter device.
3. If stockpile is to remain inactive for more than 14 calendar days, the stockpile must be vegetated. Follow the temporary vegetation specifications. The vegetation chosen shall last the duration of the stockpile; the stockpile shall be restabilized if the temporary vegetation dies or erosion results.

Source:	Symbol:	Detail No.
Adapted from Colorado Urban Storm Drainage Criteria Manual, Vol 3	—— SP ——	DE-ESC-3.7.3 Sheet 2 of 2 Date: 03/13

ENGINEERING
APPROVAL
Jan 28, 2016
REVIEWED BY
Michael Clendaniel

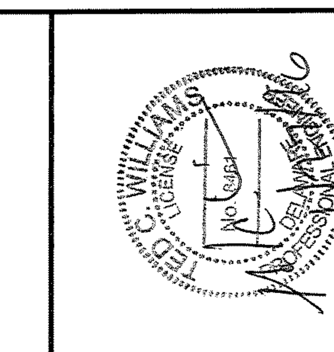

REVISIONS	CHECKED BY
1. REV. PER NCC ENGINEERING COMMENTS DATED 11-06-15	TCW 1-08-16
2. ISSUED FOR CONSTRUCTION 1-27-2016	TCW 1-27-16

APPLICATION NO. 2015-0556-S(S)
CONSTRUCTION SITE DETAILS AND NOTES
FOR
THE COMMONS AT LITTLE FALLS
SEDIMENT & STORMWATER MANAGEMENT PLANS
CHRISTIANA HUNDRED – NEW CASTLE COUNTY, DELAWARE

OWNER
CSC SPECTRUM LITTLE FALLS, LLC & NWC-SPE LLC
C/O TREFOIL PROPERTIES LP
1690 SUMNEYTOWN PIKE, SUITE 240
LANSDALE, PA 19446
(215) 855-5100

NEW CASTLE, DE (302) 323-9377
DOVER, DE (302) 734-9597
HAVRE DE GRACE, MD (410) 939-2144

Landmark Science & Engineering
100 WEST COMMONS BOULEVARD, SUITE 301
NEW CASTLE, DELAWARE 19720
PHONE - (302) 323-9377 • FAX - (302) 323-9461
INFO@LANDMARK-SE.COM • WWW.LANDMARK-SE.COM

THIS DRAWING AND THE DESIGN SHOWN ARE THE EXCLUSIVE PROPERTY OF LANDMARK SCIENCE AND ENGINEERING AND SHALL NOT BE ALTERED OR COPIED WITHOUT WRITTEN PERMISSION.

THIS DRAWING DOES NOT INCLUDE NECESSARY COMPONENTS FOR CONSTRUCTION SAFETY.

ALL CONSTRUCTION MUST BE DONE IN COMPLIANCE WITH THE OCCUPATIONAL SAFETY AND HEALTH ACT OF 1970 AND THE RULES AND REGULATIONS THERETO APPURTENANT

DRAWN BY: ALL	SCALE: AS NOTED
DESIGNED BY: TCW/JAV	DATE: 8/26/15
CHECKED BY: TCW	LAST MODIFIED 1/27/16
COMM. NO. C1115-15	FILE NO.: XXX
DRAWING NAME: E&S DETAILS.DWG	
CE-14	SHEET NO. CE-14 of 21

© 2016 LANDMARK SCIENCE & ENGINEERING

P:\C1115-15 THE COMMONS AT LITTLE FALLS PARKING GARAGE\DWG\CNST\S & S\CONSTR\E&S DETAILS.DWG

NARRATIVE

I. GENERAL

CSC SPECTRUM LITTLE FALLS, LLC PROPOSES TO RE-DEVELOP THIS 24.646± ACRE SITE THAT INCLUDES THREE TAX PARCELS. THIS SITE IS LOCATED AT THE SOUTHEAST INTERSECTION OF LANCASTER PIKE AND CENTERVILLE ROAD IN CHRISTIANA HUNDRED, NEW CASTLE COUNTY, DELAWARE. THE PROPOSED PHASED CONSTRUCTION WITH A TOTAL SITE BUILDOUT OF 235,500 S.F. G.F.A.. CONSTRUCTION IS TO INCLUDE THE REQUIRED PARKING AREAS, VEHICLUAR AND PEDESTRIAN ACCESS, AND STORMWATER QUALITY MANAGEMENT FACILITIES.

PROPOSED CONSTRUCTION WILL BE COMPLETED IN THREE (3) PHASES.

STORMWATER QUALITY IS PROPOSED TO BE MANAGED BY SEVERAL PROPOSED GTBMP FACILITIES. QUANTITY CONTROL REMAINS MANAGED BY THE EXISTING, PREVIOUSLY APPROVED, WET POND ON LOT 11.

ALL FACILITIES HAVE BEEN DESIGNED IN ACCORDANCE WITH THE DELAWARE SEDIMENT AND STORMWATER REGULATIONS AND NO STORMWATER QUALITY WAIVERS ARE BEING REQUESTED.

ACCORDING TO THE SCS SOIL SURVEY OF NEW CASTLE COUNTY SOILS ON THIS SITE ARE MAPPED AS GLENELG LOAM (GeB), CLASSIFIED AS HYDROLOGIC SOIL GROUP B AND GLENVILLE SILT LOAM (GnA), CLASSIFIED AS HYDROLOGIC SOIL GROUP C.

II. TEMPORARY SEDIMENTATION AND EROSION CONTROL MEASURES:

A. SILT FENCE: THIS STRUCTURE WILL FILTER RUNOFF CARRYING THE SEDIMENT, RETAIN THE SEDIMENT, AND ALLOW THE FILTERED RUNOFF TO PASS.

B. SUPER SILT FENCE: THIS STRUCTURE IS REINFORCED WITH CHAIN LINK FENCING AND WILL FILTER RUNOFF CARRYING THE SEDIMENT, RETAIN THE SEDIMENT, AND ALLOW THE FILTERED RUNOFF TO PASS.

C. REINFORCED SILT FENCE: THIS STRUCTURE IS REINFORCED WITH WELDED WIRE MESH AND WILL FILTER RUNOFF CARRYING THE SEDIMENT, RETAIN THE SEDIMENT, AND ALLOW THE FILTERED RUNOFF TO PASS.

D. STABILIZED CONSTRUCTION ENTRANCE: THIS CRUSHED STONE MAT PREVENTS THE "TRACKING" OR FLOWING OF SEDIMENT OFF-SITE ONTO THE EXISTING ROADWAY.

E. ROCK CHECK DAM: THIS STONE FILTRATION DEVICE IS PLACED OVER A MAT OF FILTER FABRIC IN CHANNELS OR SWALES AND TEMPORARILY SLOWS THE WATER TO TRAP SEDIMENT IN "POOLED" AREAS.

F. INLET PROTECTION TYPE 1: THIS SEDIMENT CONTROL DEVICE CONSISTS OF A FRAMEWORK OF 2 x 4'S WITH SILT FENCE PLACED AROUND THE TOP OF A CATCHBASIN LOCATED IN A CURB ROADWAY

G. INLET PROTECTION TYPE 2: THIS SEDIMENT CONTROL DEVICE CONSISTS OF A GEOTEXTILE FABRIC POUCH INSERTED INTO A CATCH BASIN FOR THE PURPOSE OF CAPTURING SEDIMENT AS IT ENTERS THE CATCH BASIN.

H. PERIMETER DIKE/SWALE: CONSISTS OF MOUNDING EARTHEN MATERIALS OR A COMBINATION OF MOUNDING AND DITCHING EARTHEN MATERIALS, TO CONVEY SEDIMENT LADEN RUNOFF INTO A SEDIMENT TRAP OR SEDIMENT BASIN.

I. SEDIMENT TRAP: AN EXCAVATION OR COMBINATION OF EXCAVATION AND EMBANKMENT, APPROPRIATELY SIZED FOR SMALLER WATERSHEDS, WHICH TRAPS SEDIMENT LADEN RUNOFF AND PROVIDES TIME FOR SEDIMENT PARTICLES TO SETTLE OUT PRIOR TO DISCHARGE TO A RECEIVING OUTLET.

J. CRITICAL SLOPE AND CHANNEL STABILIZATION: STRAW OR CURLED WOOD MATTING PLACED AFTER FINE GRADING AND SEEDING (TEMPORARY OR PERMANENT) ON ALL SLOPES 3:1 OR STEEPER AND ALL OPEN CHANNELS.

III. VEGETATIVE PRACTICES – TEMPORARY AND PERMANENT

A. AREAS DESIGNATED TO BE PERMANENTLY STABILIZED SHALL BE SEEDED WITH THE FOLLOWING SEED MIXTURE: (MIX #7 FROM DESCH PERMANENT SEEDING SPEC.)

TALL FESCUE	80%
KENTUCKY BLUEGRASS BLEND	10%
PERENNIAL RYEGRASS	10%

(% BY WEIGHT TOTAL MIXTURE)

B. SEED APPLICATION RATE: 190 LBS. PER ACRE

C. FERTILIZATION: FERTILIZER SHALL BE THE FOLLOWING FORMULATION AND APPLIED AT THE FOLLOWING RATE: 10-10-10: 250 LBS PER ACRE (FORMULATION AND RATES MAY BE MODIFIED BASED ON SOIL TEST RECOMMENDATIONS).

D. TEMPORARY SEEDING SHALL CONSIST OF ANNUAL RYE GRASS APPLIED AT THE RATE OF 125 LBS. PER ACRE.

E. STRAW MULCH SHALL BE SMALL GRAIN UNROTTED STRAW APPLIED AT 1.5-2.0 TONS PER ACRE, TACKED WITH A SYNTHETIC BINDER.

F. LIME-APPLY DOLOMITIC LIMESTONE AT 2 TONS PER ACRE.

G. COPIES OF SEED TAGS SHALL BE SAVED AND PROVIDED TO C.C.R.

H. REFER TO LANDSCAPE PLANS FOR PERMANENT SEED PLANTING MIX FOR BIORETENTION AREAS AS WELL AS PLANTING REQUIREMENTS.

IV. CONSTRUCTION STAGING – PHASE 1A (PARKING GARAGE)

A. SCHEDULE AND ATTEND A PRE-CONSTRUCTION MEETING WITH NEW CASTLE COUNTY, THE DEVELOPER, THE CCR, THE SITE CONTRACTOR AND THE CIVIL ENGINEER UNLESS WAIVED BY WRITTEN NOTICE. A CERTIFIED CONSTRUCTION REVIEWER (CCR) WILL BE REQUIRED TO REVIEW THE INSTALLATION OF ALL STORMWATER MANAGEMENT FACILITIES. NOTIFY NCC AND CCR AT LEAST 48 HOURS PRIOR TO THE START OF ANY CONSTRUCTION ITEM THAT WILL REQUIRE THEIR INSPECTION.

B. THE DNREC SEDIMENT AND STORMWATER PROGRAM MUST BE NOTIFIED IN WRITING FIVE (5) DAYS PRIOR TO COMMENCING WITH CONSTRUCTION. FAILURE TO DO SO CONSTITUTES A VIOLATION OF THE APPROVED SEDIMENT AND STORMWATER MANAGEMENT PLAN.

C. INSTALL PERIMETER CONTROLS AS SHOWN ON THE PRE-CONSTRUCTION SITE STORMWATER MANAGEMENT PLAN. ONLY THOSE AREAS WHERE THESE CONTROLS ARE INITIALLY INSTALLED SHALL BE DISTURBED.

THE CONTROL MEASURES ARE AS FOLLOWS:

1. MARK ALL LIMITS OF DISTURBANCE AS SHOWN.
2. INSTALL STABILIZED CONSTRUCTION ENTRANCES.
3. INSTALL ORANGE SAFETY FENCE AROUND AREAS TO BE PROTECTED.
4. PLACE SILT FENCE AS SHOWN.
5. STRIP AREA FOR STOCKPILING OF EXCAVATED MATERIALS.
6. INSTALL STONE OUTLET SEDIMENT TRAP.
7. INSTALL TEMPORARY BERM.
8. STOCKPILE TOPSOIL IN THE STOCKPILE LOCATION AND INSTALL SILT FENCE.

D. ALL PERIMETER CONTROLS MUST BE INSTALLED, STABILIZED, INSPECTED BY NCC PRIOR TO BULK GRADING, BUILDING PERMIT ISSUANCE, OR ANY UTILITY INSTALLATION ON NON-RESIDENTIAL PROJECTS. PRIOR TO THIS PRE-CONSTRUCTION SITE INSPECTION, NO DISTURBANCE MAY OCCUR ON-SITE OTHER THAN THOSE AREAS NECESSARY TO ESTABLISH THE PERIMETER EROSION AND SEDIMENT CONTROLS. INSTALL THE PERIMETER CONTROLS PURSUANT TO THIS PLAN. ALL EARTHEN PERIMETER SEDIMENT CONTROLS, INCLUDING SOIL STOCKPILES, SHALL BE VEGETATIVELY STABILIZED.

E. UPON SATISFACTORY PRE-CONSTRUCTION SITE INSPECTION BY THE AGENCY CONSTRUCTION SITE REVIEWER, COMMENCE DEMOLITION AND ROUGH GRADING OF THE SITE. CLEAR AND GRUBB SITE AND PREPARE SITE IN ACCORDANCE WITH THE RECOMMENDATIONS ON PAGE 10 OF THE GEOTECHNICAL REPORT PREPARED BY GEO-TECHNOLOGY ASSOCIATES, INC. DATED APRIL 21, 2015.

CONTRACTOR TO ENSURE THAT ALL RUNOFF IS DIRECTED TOWARD THE PROPER SEDIMENT CONTROL MEASURES PREVIOUSLY INSTALLED.

F. INSTALL TEMPORARY SURFACE PARKING LOT IN ITS ENTIRETY PRIOR TO DEMOLITION OF EXISTING OVERFLOW PARKING AREA NORTH OF EXISTING RESTAURANT.

G. COMMENCE ROUGH GRADING FOR PROPOSED PARKING GARAGE BUILDING PAD AND ROADWAY. CONTRACTOR TO ENSURE SUBGRADE REQUIREMENTS ARE MET IN ACCORDANCE WITH THE RECOMMENDATIONS WITHIN THE GEOTECHNICAL REPORT PREPARED BY GEO-TECHNOLOGY ASSOCIATES, INC. DATED APRIL 21, 2015.

CAREFUL FIELD REVIEW OF THE SOIL CONDITIONS SHALL BE PERFORMED PRIOR TO BY A QUALIFIED GEO-TECHNICAL ENGINEER THAT IS FAMILIAR WITH THE CURRENT GEO-TECHNICAL REPORT PREPARED BY GEO-TECHNOLOGY ASSOCIATES, INC.

H. BEGIN PLACEMENT OF UTILITIES SUCH AS STORM SEWER, WATER, ELECTRIC, AND TELECOM FOR THE PARKING GARAGE. UTILITIES ARE TO BE INSTALLED IN ACCORDANCE WITH THE RECOMMENDATIONS ON PAGE 18 OF THE GEOTECHNICAL REPORT PREPARED BY GEO-TECHNOLOGY ASSOCIATES, INC. DATED APRIL 12, 2015.

I. INSTALL INLET PROTECTION ON ALL INLETS THAT HAVE BEEN INSTALLED DURING THE COURSE OF A DAY PRIOR TO THE END OF THE DAY OR AN ANTICIPATED RAIN EVENT.

J. INSTALL CURB AND PAVEMENT BASE COURSE AROUND BIORETENTION STORMWATER MANAGEMENT FACILITIES #4 PRIOR TO EXCAVATION OF FACILITY. THIS WILL PROHIBIT SEDIMENT LADEN RUNOFF FROM ENTERING THAT AREA DURING ITS CONSTRUCTION.

K. BEGIN EXCAVATION OF BIORETENTION STORMWATER MANAGEMENT FACILITIES #3 & #4. PROVIDE TEMPORARY BERM(S) AND SILT FENCE AS APPLICABEL AROUND EACH SYSTEM TO PREVENT RUNOFF FROM ENTERING THE EXCAVATED PIT AS NEEDED.

L. THE UNDERLYING SOIL IN THE BIORETENTION AREAS SHALL BE AS WELL-AERATED AND UN-COMPACTED AS POSSIBLE. ANY COMPACTION WHICH MAY OCCUR DURING CONSTRUCTION SHALL BE ALLEVIATED BY THE CONTRACTOR AT HIS EXPENSE PRIOR TO PLACEMENT OF SYSTEM COMPONENTS. SEE PAGE 19 OF THE GEOTECHNICAL REPORT PREPARED BY GEO-TECHNOLOGY ASSOCIATES, INC. DATED APRIL 21, 2015 FOR ADDITIONAL REQUIREMENTS.

CAREFUL FIELD REVIEW OF THE SOIL CONDITIONS AT THE BASE OF EACH STORMWATER MANAGEMENT FACILITY SHALL BE PERFORMED PRIOR TO INSTALLATION OF THE BMP BY A QUALIFIED GEO-TECHNICAL ENGINEER THAT IS FAMILIAR WITH THE CURRENT GEO-TECHNICAL REPORT PREPARED BY GEO-TECHNOLOGY ASSOCIATES, INC. THESE REPORTS MUST BE SUBMITTED TO, REVIEWED BY AND ACCEPTED BY THE NEW CASTLE COUNTY ENGINEERING SECTION PRIOR TO INSTALLING THE BMP. IF THIS REPORTING IS NOT RECEIVED AND ACCEPTED BY NEW CASTLE COUNTY, THE BMP WILL BE REMOVED AND RE-INSTALLED AT THE DEVELOPERS EXPENSE.

M. CONTACT CCR AND SURVEYOR AT LEAST 3 WORKING DAYS PRIOR TO BEGINNING INSTALLATION OF EACH STORMWATER FACILITY. WITH CCR PRESENT, BEGIN INSTALLATION OF SYSTEM IN ACCORDANCE WITH THE APPROVED PLAN. THE CCR SHALL BE PRESENT DURING THE INSTALLATION AND SHALL DOCUMENT ALL ITEMS RELATED TO THE INSTALLATION.

NOTE: AN AS-BUILT SURVEY IS REQUIRED FOR EACH STORMWATER FACILITY. THERE ARE COMPONENTS OF THE SYSTEM THAT MUST BE SURVEYED PRIOR TO AND DURING ITS CONSTRUCTION.

NOTE: STORMWATER FACILITIES ARE TO REMAIN OFF-LINE UNTIL THE AREA DRAINING TO IT HAS BEEN STABILIZED.

N. UPON ISSUANCE OF THE BUILDING PERMIT FOR THE PARKING GARAGE, COMMENCE BUILDING CONSTRUCTION. SEE PAGE 16 OF THE GEOTECHNICAL REPORT PREPARED BY GEO-TECHNOLOGY ASSOCIATES, INC. DATED APRIL 21, 2015 FOR ADDITIONAL SITE PREPARATION REQUIREMENTS PRIOR TO SLAB PLACEMENT.

O. ONCE STORM DRAINAGE STRUCTURES ARE ON-LINE, PLACE REMAINING CURBING AND PAVEMENT BASE COURSE.

P. PERIODICALLY MAINTAIN THE PERIMETER CONTROL MEASURES, AS NEEDED. THE CONTRACTOR SHALL AT ALL TIMES PROTECT AGAINST SEDIMENT OR DEBRIS LADEN RUNOFF OR WIND FROM LEAVING THE SITE. PERIMETER CONTROLS ARE TO BE CHECKED DAILY AND ADJUSTED AND/OR REPAIRED AS REQUIRED TO FULLY CONTAIN AND CONTROL SEDIMENTATION ON THE SITE. ACCUMULATED SEDIMENT SHALL BE REMOVED WHEN WHEN IT HAS REACHED HALF OF THE EFFECTIVE CAPACITY OF THE CONTROL. IN ADDITION, THE CONTRACTOR MAY NEED TO ADJUST OR REPAIR MEASURES IN TIMES OF ADVERSE WEATHER CONDITIONS, OR AS DIRECTED BY THE DELEGATED AGENCY.

Q. COMPLETE PARKING GARAGE CONSTRUCTION AND PROVIDE SIDEWALKS AND PAVEMENT FOR ALL AREAS SCHEDULED.

R. FINE GRADE ALL AREAS INTENDED TO RECEIVE PERMANENT STABILIZATION MEASURES WITH MINIMUM OF 4" COMPACTED TOPSOIL (6" WITHIN DELDOT R.O.W.). PLACE SLOPE STABILIZATION AS SHOWN ON CONSTRUCTION SITE STORMWATER MANAGEMENT PLAN. PROVIDE PERMANENT SEEDING AND STRAW MULCH AS SPECIFIED.

S. WITH THE APPROVAL OF THE NCC SITE INSPECTOR, CONVERT THE SEDIMENT TRAP INTO STORMWATER FACILITIES #3 AND #4. CONTACT CCR AND SURVEYOR AT LEAST 3 WORKING DAYS PRIOR TO CONVERSION, AS THEY NEED TO BE PRESENT.

T. EROSION AND SEDIMENT CONTROL DEVICES SHOULD BE REMOVED ONLY AFTER WORK IN AN AREA HAS BEEN COMPLETED AND STABILIZED, WITH WRITTEN APPROVAL FROM THE AGENCY CONSTRUCTION SITE REVIEWER.

U. INSTALL ALL PLANTINGS SHOWN ON THE APPROVED RECORD LANDSCAPE PLAN.

V. PRIOR TO NOTIFYING NEW CASTLE COUNTY OF COMPLETION, A STORMWATER MANAGEMENT FACILITY AS-BUILT SUBMISSION PACKAGE MUST BE SUBMITTED TO NCC ENGINEERING SECTION FOR APPROVAL OF THE FACILITIES WITHIN THIS PHASE AND MUST BE APPROVED PRIOR TO NCC ISSUANCE OF A CERTIFICATE OF OCCUPANCY.

W. A RECORD PLAN COMPLIANCE INSPECTION FOR THIS PHASE MUST BE COMPLETED PRIOR TO RECEIVING A CERTIFICATE OF OCCUPANCY.

X. ONCE CERTIFICATE OF OCCUPANCY HAS BEEN ISSUED FOR THE PARKING GARAGE, CONTRACTOR IS TO INSTALL REINFORCED SILT FENCE AROUND THE PERIMETER OF BIORETENTION STORMWATER MANAGEMENT AREA # 3. REMOVE TEMPORARY SURFACE PARKING LOT IN IT'S ENTIRETY. FILL AND GRADE AS REQUIRED AND PLACE A MINIMUM OF 4" COMPACTED TOPSOIL AND PROVIDE PERMANENT SEEDING AND/OR PLANTINGS AND MULCH IN ACCORDANCE WITH THE APPROVED LANDSCAPE PLAN. ONCE STABILIZATION IS ESTABLISHED, AND WITH THE APPROVAL OF THE NCC SITE INSPECTOR, REMOVE SUPER SILT FENCE.

IV. CONSTRUCTION STAGING – PHASE 1B (MAIN OFFICE BUILDING)

A. ALL PREVIOUSLY INSTALLED PERIMETER CONTROLS MUST BE MAINTAINED AND IN WORKING ORDER AT ALL TIMES.

B. UPON SATISFACTORY PRE-CONSTRUCTION SITE INSPECTION BY THE AGENCY CONSTRUCTION SITE REVIEWER, COMMENCE DEMOLITION AND ROUGH GRADING OF THE SITE. CLEAR AND GRUBB SITE AND PREPARE SITE IN ACCORDANCE WITH THE RECOMMENDATIONS ON PAGE 10 OF THE GEOTECHNICAL REPORT PREPARED BY GEO-TECHNOLOGY ASSOCIATES, INC. DATED APRIL 21, 2015.

CONTRACTOR TO ENSURE THAT ALL RUNOFF IS DIRECTED TOWARD THE PROPER SEDIMENT CONTROL MEASURES PREVIOUSLY INSTALLED.

C. COMMENCE ROUGH GRADING FOR PROPOSED BUILDING PAD AND ACCESSWAYS, PARKING AREAS, ETC. CONTRACTOR TO ENSURE SUBGRADE REQUIREMENTS ARE MET IN ACCORDANCE WITH THE RECOMMENDATIONS WITHIN THE GEOTECHNICAL REPORT PREPARED BY GEO-TECHNOLOGY ASSOCIATES, INC. DATED APRIL 21, 2015.

CAREFUL FIELD REVIEW OF THE SOIL CONDITIONS SHALL BE PERFORMED PRIOR TO BY A QUALIFIED GEO-TECHNICAL ENGINEER THAT IS FAMILIAR WITH THE CURRENT GEO-TECHNICAL REPORT PREPARED BY GEO-TECHNOLOGY ASSOCIATES, INC.

D. BEGIN PLACEMENT OF UTILITIES SUCH AS STORM SEWER, SANITARY SEWER, WATER, ELECTRIC, AND TELECOM. UTILITIES ARE TO BE INSTALLED IN ACCORDANCE WITH THE RECOMMENDATIONS ON PAGE 18 OF THE GEOTECHNICAL REPORT PREPARED BY GEO-TECHNOLOGY ASSOCIATES, INC. DATED APRIL 12, 2015.

E. INSTALL INLET PROTECTION ON ALL INLETS THAT HAVE BEEN INSTALLED DURING THE COURSE OF A DAY PRIOR TO THE END OF THE DAY OR AN ANTICIPATED RAIN EVENT.

F. BEGIN EXCAVATION OF SUBSURFACE STORMTECH STORMWATER MANAGEMENT FACILITY #1. PROVIDE TEMPORARY BERM(S) AND ORANGE SAFETY FENCING AROUND THE SYSTEM TO PREVENT RUNOFF FROM ENTERING THE EXCAVATED PIT AS NEEDED.

G. THE UNDERLYING SOIL IN THE STORMTECH AREA SHALL BE AS WELL-AERATED AND UN-COMPACTED AS POSSIBLE. ANY COMPACTION WHICH MAY OCCUR DURING CONSTRUCTION SHALL BE ALLEVIATED BY THE CONTRACTOR AT HIS EXPENSE PRIOR TO PLACEMENT OF SYSTEM COMPONENTS. SEE PAGE 19 OF THE GEOTECHNICAL REPORT PREPARED BY GEO-TECHNOLOGY ASSOCIATES, INC. DATED APRIL 21, 2015 FOR ADDITIONAL REQUIREMENTS.

CAREFUL FIELD REVIEW OF THE SOIL CONDITIONS AT THE BASE OF EACH STORMWATER MANAGEMENT FACILITY SHALL BE PERFORMED PRIOR TO INSTALLATION OF THE BMP BY A QUALIFIED GEO-TECHNICAL ENGINEER THAT IS FAMILIAR WITH THE CURRENT GEO-TECHNICAL REPORT PREPARED BY GEO-TECHNOLOGY ASSOCIATES, INC. THESE REPORTS MUST BE SUBMITTED TO, REVIEWED BY AND ACCEPTED BY THE NEW CASTLE COUNTY ENGINEERING SECTION PRIOR TO INSTALLING THE BMP. IF THIS REPORTING IS NOT RECEIVED AND ACCEPTED BY NEW CASTLE COUNTY, THE BMP WILL BE REMOVED AND RE-INSTALLED AT THE DEVELOPERS EXPENSE.

H. CONTACT CCR AND SURVEYOR AT LEAST 3 WORKING DAYS PRIOR TO BEGINNING INSTALLATION OF EACH STORMTECH FACILITY. WITH CCR PRESENT, BEGIN INSTALLATION OF SYSTEM IN ACCORDANCE WITH BOTH THE APPROVED PLAN AND THE CURRENT INSTALLATION MANUAL PUBLISHED BY STORMTECH. (CALL 1-888-892-2694 OR VISIT WWW.STORMTECH.COM) CONTACT STORMTECH 30 DAYS PRIOR TO THE INSTALLATION TO SCHEDULE A CONSULTATION IF CONTRACTOR IS NEW TO INSTALLATION OF THESE SYSTEMS. THE CCR SHALL BE PRESENT DURING THE INSTALLATION AND SHALL DOCUMENT ALL ITEMS RELATED TO THE INSTALLATION OF THE STORMTECH SYSTEM.

NOTE: AN AS-BUILT SURVEY IS REQUIRED FOR EACH STORMTECH FACILITY. THERE ARE COMPONENTS OF THE SYSTEM THAT MUST BE SURVEYED PRIOR TO AND DURING ITS CONSTRUCTION.

NOTE: STORMTECH FACILITIES ARE TO REMAIN OFF-LINE UNTIL THE AREA DRAINING TO IT HAS BEEN STABILIZED (INSTALL AN ADS END CAP ON THE HDPEP(S) THAT ALLOW RUNOFF TO ENTER THE STORMTECH SYSTEM). INSTALL INLET PROTECTION PER THE POST-CONSTRUCTION S&S PLAN.

ORANGE SAFETY FENCING SHALL REMAIN AROUND THE ENTIRE LIMITS OF THE STORMTECH FACILITY UNTIL THE TYPE 'B' HOT-MIX IS PLACED.

I. INSTALL CURB AND PAVEMENT BASE COURSE AROUND BIORETENTION STORMWATER MANAGEMENT FACILITY #2 PRIOR TO EXCAVATION OF FACILITY. THIS WILL PROHIBIT SEDIMENT LADEN RUNOFF FROM ENTERING THAT AREA DURING ITS CONSTRUCTION.

J. CONTACT CCR AND SURVEYOR AT LEAST 3 WORKING DAYS PRIOR TO BEGINNING CONSTRUCTION OF ALL STORMWATER FACILITIES.

K. BEGIN EXCAVATION OF BIORETENTION STORMWATER MANAGEMENT FACILITIES #2 & #8. PROVIDE TEMPORARY BERM(S) AND ORANGE SAFETY FENCING AROUND EACH SYSTEM TO PREVENT RUNOFF FROM ENTERING THE EXCAVATED AREA AS NEEDED.

CONSTRUCT AT GRADE STORMWATER MANAGEMENT FACILITIES. THESE FACILITIES MUST REMAIN OFF-LINE UNTIL THEIR CONTRIBUTING DRAINAGE AREA(S) ARE PERMANENTLY STABILIZED.

CAREFUL FIELD REVIEW OF THE SOIL CONDITIONS AT THE BASE OF EACH STORMWATER MANAGEMENT FACILITY SHALL BE PERFORMED PRIOR TO INSTALLATION OF THE BMP BY A QUALIFIED GEO-TECHNICAL ENGINEER THAT IS FAMILIAR WITH THE CURRENT GEO-TECHNICAL REPORT PREPARED BY GEO-TECHNOLOGY ASSOCIATES, INC. THESE REPORTS MUST BE SUBMITTED TO, REVIEWED BY AND ACCEPTED BY THE NEW CASTLE COUNTY ENGINEERING SECTION PRIOR TO INSTALLING THE BMP. IF THIS REPORTING IS NOT RECEIVED AND ACCEPTED BY NEW CASTLE COUNTY, THE BMP WILL BE REMOVED AND RE-INSTALLED AT THE DEVELOPERS EXPENSE.

NOTE: AN AS-BUILT SURVEY IS REQUIRED FOR EACH STORMWATER FACILITY. THERE ARE COMPONENTS OF THE SYSTEMS THAT MUST BE SURVEYED PRIOR TO AND DURING ITS CONSTRUCTION.

L. UPON ISSUANCE OF THE BUILDING PERMITS FOR THE PHASE 1B BUILDING. COMMENCE BUILDING CONSTRUCTION. SEE PAGE 16 OF THE GEOTECHNICAL REPORT PREPARED BY GEO-TECHNOLOGY ASSOCIATES, INC. DATED APRIL 21, 2015 FOR ADDITIONAL SITE PREPARATION REQUIREMENTS PRIOR TO SLAB PLACEMENT.

M. ONCE STORM DRAINAGE STRUCTURES ARE ON-LINE, PLACE CURBING AND PAVEMENT BASE COURSE. ACCESS TO THE REAR PARKING LOT MUST REMAIN DURING THEIR BUSINESS HOURS FOR THE HONDA FINANCIAL PARCEL. CONTRACTOR TO CONSTRUCT NEW ROADWAY CURB AND BASE COURSE PRIOR TO DEMOLITION OF EXISTING ACCESS AS MUCH AS PRACTICABLE. IF NECESSARY, REMAINING WORK MUST BE COMPLETED DURING NIGHT AND/OR WEEKEND HOURS.

N. PERIODICALLY MAINTAIN THE PERIMETER CONTROL MEASURES, AS NEEDED. THE CONTRACTOR SHALL AT ALL TIMES PROTECT AGAINST SEDIMENT OR DEBRIS LADEN RUNOFF OR WIND FROM LEAVING THE SITE. PERIMETER CONTROLS ARE TO BE CHECKED DAILY AND ADJUSTED AND/OR REPAIRED AS REQUIRED TO FULLY CONTAIN AND CONTROL SEDIMENTATION ON THE SITE. ACCUMULATED SEDIMENT SHALL BE REMOVED WHEN WHEN IT HAS REACHED HALF OF THE EFFECTIVE CAPACITY OF THE CONTROL. IN ADDITION, THE CONTRACTOR MAY NEED TO ADJUST OR REPAIR MEASURES IN TIMES OF ADVERSE WEATHER CONDITIONS, OR AS DIRECTED BY THE DELEGATED AGENCY.

O. COMPLETE BUILDING CONSTRUCTION AND PROVIDE SIDEWALKS AND PAVEMENT FOR ALL AREAS SCHEDULED.

P. FINE GRADE ALL AREAS INTENDED TO RECEIVE PERMANENT STABILIZATION MEASURES WITH MINIMUM OF 4" COMPACTED TOPSOIL (6" WITHIN DELDOT R.O.W.). PLACE SLOPE STABILIZATION AS SHOWN ON CONSTRUCTION SITE STORMWATER MANAGEMENT PLAN. PROVIDE PERMANENT SEEDING AND STRAW MULCH AS SPECIFIED.

Q. WITH THE APPROVAL OF THE NCC SITE INSPECTOR, CONVERT THE SEDIMENT TRAP INTO STORMWATER FACILITIES #9 AND #10. CONTACT CCR AND SURVEYOR AT LEAST 3 WORKING DAYS PRIOR TO CONVERSION, AS THEY NEED TO BE PRESENT. ALL ITEMS LISTED IS ITEMS G. AND H. ABOVE APPLY TO THESE FACILITIES AS WELL.

R. EROSION AND SEDIMENT CONTROL DEVICES SHOULD BE REMOVED ONLY AFTER WORK IN AN AREA HAS BEEN COMPLETED AND STABILIZED, WITH WRITTEN APPROVAL FROM THE AGENCY CONSTRUCTION SITE REVIEWER.

S. INSTALL ALL PLANTINGS SHOWN ON THE APPROVED RECORD LANDSCAPE PLAN.

T. PRIOR TO NOTIFYING NEW CASTLE COUNTY OF COMPLETION, A COMPLETE SITE STORMWATER MANAGEMENT FACILITY AS-BUILT SUBMISSION PACKAGE MUST BE SUBMITTED TO NCC ENGINEERING SECTION FOR APPROVAL AND MUST BE APPROVED PRIOR TO NCC ISSUANCE OF A CERTIFICATE OF OCCUPANCY.

U. A RECORD PLAN COMPLIANCE INSPECTION MUST BE COMPLETED PRIOR TO RECEIVING A CERTIFICATE OF OCCUPANCY.

V. THE TERMINATION OF THE CONSTRUCTION GENERAL PERMIT (N.O.T.) WILL REQUIRE SUBMISSION AND ACCEPTANCE OF THE POST-CONSTRUCTION VERIFICATION DOCUMENTS, INCLUDING FINAL STABILIZATION THROUGHOUT THE SITE, ALL ELEMENTS OF THE SEDIMENT AND STORMWATER MANAGEMENT PLAN IMPLEMENTED, AND ACCEPTANCE IF THE FINAL OPERATION AND MAINTENANCE PLAN.

IV. CONSTRUCTION STAGING – PHASE 2 (OFFICE BUILDING)

A. PRIOR TO BEGINNING THIS PHASE, SCHEDULE AND ATTEND A PRE-CONSTRUCTION MEETING WITH NEW CASTLE COUNTY, THE DEVELOPER, THE CCR, THE SITE CONTRACTOR AND THE CIVIL ENGINEER UNLESS WAIVED BY WRITTEN NOTICE. NO THIRD PARTY CERTIFIED CONSTRUCTION REVIEWER (CCR) WILL BE REQUIRED TO SINCE THERE ARE NO STORMWATER MANAGEMENT FACILITY INSTALLATIONS WITHIN THIS PHASE. NOTIFY NCC AT LEAST 8 HOURS PRIOR TO THE START OF ANY CONSTRUCTION ITEM THAT WILL REQUIRE THEIR INSPECTION.

B. THE DNREC SEDIMENT AND STORMWATER PROGRAM MUST BE NOTIFIED IN WRITING FIVE (5) DAYS PRIOR TO COMMENCING WITH CONSTRUCTION. FAILURE TO DO SO CONSTITUTES A VIOLATION OF THE APPROVED SEDIMENT AND STORMWATER MANAGEMENT PLAN.

C. INSTALL PERIMETER CONTROLS AS SHOWN ON THE PRE-CONSTRUCTION SITE STORMWATER MANAGEMENT PLAN. ONLY THOSE AREAS WHERE THESE CONTROLS ARE INITIALLY INSTALLED SHALL BE DISTURBED.

THE CONTROL MEASURES ARE AS FOLLOWS:

1. MARK ALL LIMITS OF DISTURBANCE AS SHOWN.
2. INSTALL ORANGE SAFETY FENCE AROUND AREAS TO BE PROTECTED.
3. PLACE SILT FENCE AS SHOWN.
4. STRIP AREA FOR STOCKPILING OF EXCAVATED MATERIALS.
5. STOCKPILE TOPSOIL IN THE STOCKPILE LOCATION AND INSTALL SILT FENCE.

D. ALL PERIMETER CONTROLS MUST BE INSTALLED, STABILIZED, INSPECTED BY NCC PRIOR TO BULK GRADING, BUILDING PERMIT ISSUANCE, OR ANY UTILITY INSTALLATION ON NON-RESIDENTIAL PROJECTS. PRIOR TO THIS PRE-CONSTRUCTION SITE INSPECTION, NO DISTURBANCE MAY OCCUR ON-SITE OTHER THAN THOSE AREAS NECESSARY TO ESTABLISH THE PERIMETER EROSION AND SEDIMENT CONTROLS. INSTALL THE PERIMETER CONTROLS PURSUANT TO THIS PLAN. ALL EARTHEN PERIMETER SEDIMENT CONTROLS, INCLUDING SOIL STOCKPILES, SHALL BE VEGETATIVELY STABILIZED.

E. UPON SATISFACTORY PRE-CONSTRUCTION SITE INSPECTION BY THE AGENCY CONSTRUCTION SITE REVIEWER, COMMENCE DEMOLITION AND ROUGH GRADING OF THE SITE. CLEAR AND GRUBB SITE AND PREPARE SITE IN ACCORDANCE WITH THE RECOMMENDATIONS ON PAGE 10 OF THE GEOTECHNICAL REPORT PREPARED BY GEO-TECHNOLOGY ASSOCIATES, INC. DATED APRIL 21, 2015.

CONTRACTOR TO ENSURE THAT ALL RUNOFF IS DIRECTED TOWARD THE PROPER SEDIMENT CONTROL MEASURES PREVIOUSLY INSTALLED.

F. COMMENCE ROUGH GRADING FOR PROPOSED BUILDING PAD. CONTRACTOR TO ENSURE SUBGRADE REQUIREMENTS ARE MET IN ACCORDANCE WITH THE RECOMMENDATIONS WITHIN THE GEOTECHNICAL REPORT PREPARED BY GEO-TECHNOLOGY ASSOCIATES, INC. DATED APRIL 21, 2015.

CAREFUL FIELD REVIEW OF THE SOIL CONDITIONS SHALL BE PERFORMED PRIOR TO BY A QUALIFIED GEO-TECHNICAL ENGINEER THAT IS FAMILIAR WITH THE CURRENT GEO-TECHNICAL REPORT PREPARED BY GEO-TECHNOLOGY ASSOCIATES, INC.

G. BEGIN PLACEMENT OF ANY REQUIRED UTILITIES. UTILITIES ARE TO BE INSTALLED IN ACCORDANCE WITH THE RECOMMENDATIONS ON PAGE 18 OF THE GEOTECHNICAL REPORT PREPARED BY GEO-TECHNOLOGY ASSOCIATES, INC. DATED APRIL 12, 2015.

H. REMOVE CURB AND HOT-MIX IN THE AREA OF THE TEMPORARY PARKING STALLS ADJACENT TO THE PROPOSED BUILDING. LEAVE BASE COURSE TEMPORARILY AND USE THIS AREA FOR CONSTRUCTION ACCESS TO THE BUILDING PAD.

I. UPON ISSUANCE OF THE BUILDING PERMITS FOR THE PHASE 1B BUILDING. COMMENCE BUILDING CONSTRUCTION. SEE PAGE 16 OF THE GEOTECHNICAL REPORT PREPARED BY GEO-TECHNOLOGY ASSOCIATES, INC. DATED APRIL 21, 2015 FOR ADDITIONAL SITE PREPARATION REQUIREMENTS PRIOR TO SLAB PLACEMENT.

J. PERIODICALLY MAINTAIN THE PERIMETER CONTROL MEASURES, AS NEEDED. THE CONTRACTOR SHALL AT ALL TIMES PROTECT AGAINST SEDIMENT OR DEBRIS LADEN RUNOFF OR WIND FROM LEAVING THE SITE. PERIMETER CONTROLS ARE TO BE CHECKED DAILY AND ADJUSTED AND/OR REPAIRED AS REQUIRED TO FULLY CONTAIN AND CONTROL SEDIMENTATION ON THE SITE. ACCUMULATED SEDIMENT SHALL BE REMOVED WHEN WHEN IT HAS REACHED HALF OF THE EFFECTIVE CAPACITY OF THE CONTROL. IN ADDITION, THE CONTRACTOR MAY NEED TO ADJUST OR REPAIR MEASURES IN TIMES OF ADVERSE WEATHER CONDITIONS, OR AS DIRECTED BY THE DELEGATED AGENCY.

K. COMPLETE BUILDING CONSTRUCTION AND PROVIDE CURB, SIDEWALKS AND PAVEMENT FOR ALL AREAS SCHEDULED.

L. FINE GRADE ALL AREAS INTENDED TO RECEIVE PERMANENT STABILIZATION MEASURES WITH MINIMUM OF 4" COMPACTED TOPSOIL (6" WITHIN DELDOT R.O.W.). PLACE SLOPE STABILIZATION AS SHOWN ON CONSTRUCTION SITE STORMWATER MANAGEMENT PLAN. PROVIDE PERMANENT SEEDING AND STRAW MULCH AS SPECIFIED.

M. EROSION AND SEDIMENT CONTROL DEVICES SHOULD BE REMOVED ONLY AFTER WORK IN AN AREA HAS BEEN COMPLETED AND STABILIZED, WITH WRITTEN APPROVAL FROM THE AGENCY CONSTRUCTION SITE REVIEWER.

N. INSTALL ALL PLANTINGS SHOWN ON THE APPROVED RECORD LANDSCAPE PLAN.

O. A RECORD PLAN COMPLIANCE INSPECTION MUST BE COMPLETED PRIOR TO RECEIVING A CERTIFICATE OF OCCUPANCY.

ENGINEERING
APPROVAL
Jan 28, 2016
REVIEWED BY
Michael Clendaniel

V. GENERAL MAINTENANCE REQUIREMENTS

MAINTENANCE OF THE POST-CONSTRUCTION STORMWATER MANAGEMENT FACILITIES, INCLUDING BUT NOT LIMITED TO, OUTLET STRUCTURES, EMBANKMENTS, AND GENERAL APPEARANCE WILL BE THE RESPONSIBILITY OF THE PROPERTY OWNER.

SEE POST-CONSTRUCTION SITE STORMWATER MANAGEMENT FACILITY PLANS FOR SPECIFIC OPERATION & MAINTENANCE REQUIREMENTS FOR EACH FACILITY.

GENERAL SEDIMENT AND STORMWATER NOTES

1. A PRE-CONSTRUCTION MEETING (UNLESS WAIVED BY NEW CASTLE COUNTY) MUST BE HELD PRIOR TO COMMENCING CONSTRUCTION. CONTACT NEW CASTLE COUNTY ENGINEERING SECTION AT (302-395-5400) TO SCHEDULE MEETING. FAILURE TO DO SO CONSTITUTES A VIOLATION OF THE APPROVED SEDIMENT AND STORMWATER MANAGEMENT PLAN.
2. THE DNREC SEDIMENT AND STORMWATER PROGRAM MUST BE NOTIFIED IN WRITING FIVE (5) DAYS PRIOR TO COMMENCING WITH CONSTRUCTION. FAILURE TO DO SO CONSTITUTES A VIOLATION OF THE APPROVED SEDIMENT AND STORMWATER MANAGEMENT PLAN.
3. DNREC AND NEW CASTLE COUNTY (NCC) PERSONNEL SHALL HAVE THE RIGHT TO CONDUCT ON-SITE INSPECTIONS OF LAND DISTURBING ACTIVITIES AT ANY TIME.
4. ALL PERIMETER CONTROLS MUST BE INSTALLED, STABILIZED, INSPECTED BY NCC PRIOR TO BULK GRADING, BUILDING PERMIT ISSUANCE, OR ANY UTILITY INSTALLATION ON NON-RESIDENTIAL PROJECTS. PRIOR TO THIS PRE-CONSTRUCTION SITE INSPECTION, NO DISTURBANCE MAY OCCUR ON-SITE OTHER THAN THOSE AREAS NECESSARY TO ESTABLISH THE PERIMETER EROSION AND SEDIMENT CONTROLS. INSTALL THE PERIMETER CONTROLS PURSUANT TO THIS PLAN. ALL PERIMETER SEDIMENT CONTROLS, INCLUDING SOIL STOCKPILES, SHALL BE VEGETATIVELY STABILIZED.
5. RESERVED.
6. RESERVED.
7. RESERVED.
8. REVIEW AND APPROVAL OF THE SEDIMENT AND STORMWATER MANAGEMENT PLAN SHALL NOT RELIEVE THE CONTRACTOR FROM HIS OR HER RESPONSIBILITIES FOR COMPLIANCE WITH THE SEDIMENT AND STORMWATER REGULATIONS NOR SHALL IT RELIEVE THE CONTRACTOR FROM ERRORS OR OMISSIONS ON THE APPROVED PLAN. THE OWNER/DEVELOPER SHALL BE RESPONSIBLE FOR ACQUIRING ANY AND ALL AGREEMENTS, EASEMENTS, ETC. NECESSARY TO COMPLY WITH ALL APPLICABLE REGULATIONS, CODES, STANDARDS, GUIDELINES AND POLICIES. ANY DEVIATION FROM THE APPROVED PLAN REQUIRES WRITTEN APPROVAL FROM NCC.
9. UNLESS OTHERWISE AUTHORIZED BY NCC, ALL WORK MUST BE DONE IN ACCORDANCE WITH THE LATEST APPROVED SEDIMENT AND STORMWATER MANAGEMENT PLAN. IF THE APPROVED PLAN NEEDS TO BE MODIFIED, ADDITIONAL SEDIMENT AND STORMWATER MANAGEMENT PRACTICES MAY BE REQUIRED AS DEEMED NECESSARY BY THE NEW CASTLE COUNTY DEPARTMENT OF LAND USE. IF NCC DETERMINES THE APPROVED PLAN TO BE DEFICIENT, THAT PLAN WILL BE VOIDED, THE SITE ISSUED A STOP WORK ORDER AND THE SUBMISSION OF A REVISED PLAN WILL BE REQUIRED FOR REVIEW AND APPROVAL BY NCC.
10. THE THIRD PARTY CCR IS REQUIRED FOR THIS PROJECT AND IS RESPONSIBLE FOR REVIEWING THE CONSTRUCTION OF ANY PERMANENT STORMWATER MANAGEMENT FACILITIES AND SUBMITTING AN APPROPRIATE INSPECTION CHECKLIST, SIGNED BY A P.E., FOR CERTIFICATION OF THAT WORK. IF THE SEQUENCE OF CONSTRUCTION CALLS FOR A PERMANENT STORMWATER FACILITY TO BE INSTALLED AS AN ELEMENT OF THE PERIMETER CONTROLS, THAT CHECKLIST AND STORMWATER AS-BUILT WILL BE REQUIRED PRIOR TO BUILDING PERMIT ISSUANCE.
11. ALL INSPECTION REPORTS FROM BOTH THE CCR AND THE COUNTY ENGINEER/INSPECTOR SHALL BE ELECTRONICALLY SUBMITTED WEEKLY TO ALL PARTIES INCLUDED ON THE CONSTRUCTION INFORMATION SHEET. THESE REPORTS SHALL INCLUDE A DATE BY WHICH ALL DEFICIENCIES MUST BE RESOLVED. FAILURE TO RESOLVE THE DEFICIENCIES INDICATED ON THE INSPECTION REPORT BY THE GIVEN DATE MAY RESULT IN ENFORCEMENT ACTION CONSIDERED APPROPRIATE BY THE DEPARTMENT.
12. THE CCR AND NCC ENGINEER/E&S INSPECTOR MUST BE NOTIFIED 48 HOURS PRIOR TO ALL ELEMENTS OF SITE WORK WHICH REQUIRE INSPECTION. FAILURE TO PROVIDE THE APPROPRIATE NOTIFICATION MAY RESULT IN THE CONTRACTOR EXCAVATING SUFFICIENT MATERIAL TO VERIFY CONSTRUCTION IN ACCORDANCE WITH THE APPROVED SEDIMENT AND STORMWATER MANAGEMENT PLAN. SHOULD ANY PART OF A STORMWATER MANAGEMENT BASIN EMBANKMENT NEED TO BE EXCAVATED, THE ENTIRE EMBANKMENT MUST BE RECONSTRUCTED (IF APPLICABLE).
13. AS-BUILT PLANS AND PHOTOGRAPHIC DOCUMENTATION (AND ALL APPLICABLE SUPPLEMENTARY DOCUMENTATION) SHALL BE SUBMITTED TO AND APPROVED BY NCC FOR ALL PERMANENT STORMWATER MANAGEMENT FACILITIES PRIOR TO ISSUANCE OF A CERTIFICATE OF OCCUPANCY FOR A PARTICULAR PHASE.
14. LIMITS OF DISTURBANCE MUST BE DELINEATED IN THE FIELD. TOTAL DISTURBED ACREAGE = 2.90 ACRES. THE LIMITS OF DISTURBANCE SHALL BE CLEARLY DEFINED AT ALL TIMES DURING CONSTRUCTION.
15. ALL DISTURBED SOIL SURFACES, INCLUDING SOIL STOCKPILES AND PERIMETER CONTROLS ARE SUBJECT TO EROSION AND SHALL BE EITHER PERMANENTLY OR TEMPORARY STABILIZED WITHIN FOURTEEN (14) DAYS.
16. ALL PROPOSED EROSION AND SEDIMENT CONTROLS WILL BE INSTALLED IN ACCORDANCE WITH THE DELAWARE EROSION AND SEDIMENT CONTROL HANDBOOK, 2013, OR AS AMENDED.
17. EROSION AND SEDIMENT CONTROL MEASURES SHALL BE INSPECTED PERIODICALLY AND AFTER EACH RAINFALL. MAINTENANCE MUST BE PERFORMED AFTER EACH INSPECTION AS NECESSARY. ANY ERODED AREAS SHALL BE STABILIZED AND ANY ACCUMULATED SEDIMENT SHALL BE REMOVED AND DISPOSED OF ACCORDING TO PLAN.
18. SHOULD QUESTIONS ARISE REGARDING THE MAINTENANCE OF EROSION AND SEDIMENT CONTROL PRACTICES, THE SITE CONTRACTOR SHALL CONTACT THE CONSULTING ENGINEER EXPEDITIOUSLY FOR TECHNICAL ASSISTANCE.
19. UPON RECEIPT OF TWO CONSECUTIVE UNSATISFACTORY CCR AND/OR NCC EROSION AND SEDIMENT CONTROL INSPECTION REPORTS, THE SITE MAY BE ISSUED A STOP WORK ORDER AND A SHOW CAUSE HEARING SCHEDULED.
20. RESERVED.
21. PURSUANT TO SECTION 8, PLAN APPLICATION AND APPROVAL PROCESS OF THE DELAWARE SEDIMENT AND STORMWATER REGULATIONS, AS AMENDED, ALL APPROVED S&S PLANS EXPIRE THREE (3) YEARS FROM THE DATE OF PLAN APPROVAL OR DATE OF PLAN RECORDATION IF NO PLAN APPROVALS ISSUED AFTER PLAN RECORDATION DATE, UNLESS SPECIFICALLY AUTHORIZED BY THE DEPARTMENT. ANY APPROVED S&S PLAN SUPERCEDED BY ANOTHER APPROVED S&S PLAN SHALL BE CONSIDERED EXPIRED AND WILL NOT BE RECOGNIZED UNLESS SPECIFICALLY AUTHORIZED BY THE DEPARTMENT.
22. THE APPROVED S&S PLAN INCORPORATES POLLUTION PREVENTION PRACTICES LISTED UNDER STANDARDS AND SPECIFICATIONS FOR CONSTRUCTION SITE POLLUTION PREVENTION IN THE DELAWARE EROSION AND SEDIMENT CONTROL HANDBOOK, DATED DECEMBER 2003 AND ITS REVISIONS.
23. RESERVED.

SUPPLEMENTAL SEDIMENT AND STORMWATER NOTES

24. IT WILL BE THE LANDOWNER'S RESPONSIBILITY FOR PERPETUAL MAINTENANCE OF ALL STORMWATER MANAGEMENT FACILITIES.
25. IT IS THE CONTRACTOR'S RESPONSIBILITY TO REPAIR AND STABILIZE ALL EROSION AND SEDIMENT CONTROLS AND STORMWATER PRACTICES DURING CONSTRUCTION, INCLUDING THOSE THAT ARE DISTURBED BY UTILITY COMPANIES.
26. ALL ROCK/STONE, WITH THE EXCEPTION OF CHECK DAMS, MUST BE UNDERLINED WITH A GEOTEXTILE FABRIC.
27. IN THE EVENT EARTHWORK OPERATIONS ARE HALTED FOR THE WINTER MONTHS, BEFORE FINAL GRADING AND SEEDING OF ALL DISTURBED AREAS ARE COMPLETED, THOSE AREAS SHALL BE EITHER SEEDED OR STABILIZED WITH MULCH AND TACKED WITH A CHEMICAL ADHESIVE.
28. THE CONTRACTOR SHALL USE ALL MEANS NECESSARY TO CONTROL DUST ON AND NEAR THE WORK AREA IF SUCH DUST IS CAUSED BY THE CONTRACTOR'S OPERATIONS DURING THE WORK, OR IF RESULTING FROM THE CONDITIONS IN WHICH THE CONTRACTOR LEAVES THE SITE. IF DUST BECOMES A PROBLEM, SPRAY DISTURBED AREAS WITH WATER HOURLY OR APPLY CALCIUM CHLORIDE.
29. THE CONTRACTOR SHALL CONTROL TRACKING OF SEDIMENT OFF-SITE ONTO PUBLIC PAVED SURFACES. SHOULD TRACKING OCCUR, THE CONTRACTOR SHALL SWEEP OR REMOVE THE SEDIMENT BY OTHER MEANS SO AS TO PREVENT SEDIMENTATION OF OFF-SITE DRAINAGE SYSTEMS OR WATER BODIES.
30. ALL SITE IMPROVEMENTS INCLUDING LANDSCAPING, PERMANENT SITE STABILIZATION AND PERMANENT STORMWATER MANAGEMENT FACILITIES SHALL BE IN PLACE AND APPROVED PRIOR TO ISSUANCE OF CERTIFICATE OF OCCUPANCY.

REVISIONS	CHECKED BY
1. REV. PER NCC ENGINEERING COMMENTS DATED 11-06-15	TCW 1-08-16
2. ISSUED FOR CONSTRUCTION 1-27-2016	TCW 1-27-16

APPLICATION NO. 2015-0556-S(S)
CONSTRUCTION SITE DETAILS AND NOTES
FOR
THE COMMONS AT LITTLE FALLS
SEDIMENT & STORMWATER MANAGEMENT PLANS
CHRISTIANA HUNDRED – NEW CASTLE COUNTY, DELAWARE

OWNER
CSC SPECTRUM LITTLE FALLS, LLC & NWC-SPE LLC
C/O TREFOIL PROPERTIES LP
1690 SUMNEYTOWN PIKE, SUITE 240
LANSDALE, PA 19446
(215) 855-5100

NEW CASTLE, DE (302) 323-9377
DOVER, DE (302) 734-9597
HAVRE DE GRACE, MD (410) 939-2144

Landmark Science & Engineering
100 WEST COMMONS BOULEVARD, SUITE 301
NEW CASTLE, DELAWARE 19720
PHONE - (302) 323-9377 • FAX - (302) 323-9461
INFO @ LANDMARK-SE.COM • WWW.LANDMARK-SE.COM

THIS DRAWING AND THE DESIGN SHOWN ARE THE EXCLUSIVE PROPERTY OF LANDMARK SCIENCE AND ENGINEERING AND SHALL NOT BE ALTERED OR COPIED WITHOUT WRITTEN PERMISSION.

THIS DRAWING DOES NOT INCLUDE NECESSARY COMPONENTS FOR CONSTRUCTION SAFETY.

ALL CONSTRUCTION MUST BE DONE IN COMPLIANCE WITH THE OCCUPATIONAL SAFETY AND HEALTH ACT OF 1970 AND THE RULES AND REGULATIONS THERETO APPURTENANT

DRAWN BY: ALL	SCALE: AS NOTED
DESIGNED BY: TCW/JAV	DATE: 8/26/15
CHECKED BY: TCW	LAST MODIFIED 1/27/16
COMM. NO. C1115-15	FILE NO.: XXX
DRAWING NAME: E&S DETAILS.DWG	
CE-15	SHEET NO. CE-15 of 21

© 2016 LANDMARK SCIENCE & ENGINEERING

STORMTECH GENERAL NOTES

1. STORMTECH LLC ("STORMTECH") REQUIRES INSTALLING CONTRACTORS TO USE AND UNDERSTAND STORMTECH'S LATEST INSTALLATION INSTRUCTIONS PRIOR TO BEGINNING SYSTEM INSTALLATION.
2. STORMTECH TECHNICAL SERVICES DEPARTMENT OFFERS INSTALLATION CONSULTATIONS TO INSTALLING CONTRACTORS. CONTACT OUR TECHNICAL SERVICES REPRESENTATIVE AT LEAST 30 DAYS PRIOR TO SYSTEM INSTALLATION TO ARRANGE A PRE-INSTALLATION CONSULTATION. OUR REPRESENTATIVES CAN THEN ANSWER QUESTIONS OR ADDRESS COMMENTS ON THE STORMTECH CHAMBER SYSTEM AND INFORM THE INSTALLING CONTRACTOR OF THE MINIMUM INSTALLATION REQUIREMENTS BEFORE BEGINNING THE SYSTEM'S CONSTRUCTION. CALL 1-888-892-2694 TO SPEAK TO A TECHNICAL SERVICE REPRESENTATIVE OR VISIT TO RCEIVE A COPY OF OUR INSTALLATION INSTRUCTIONS.
3. STORMTECH'S REQUIREMENTS FOR SYSTEMS WITH PAVEMENT DESIGN (ASPHALT, CONCRETE PAVERS, ETC.): MINIMUM COVER IS 18 INCHES NOT INCLUDING PAVEMENT; MAXIMUM COVER IS 96 INCHES INCLUDING PAVEMENT. FOR INSTALLATIONS THAT DO NOT INCLUDE PAVEMENT, WHERE RUTTING FROM VEHICLES MAY OCCUR, MINIMUM REQUIRED COVER IS 24 INCHES, MAXIMUM COVER IS 96 INCHES.
4. THE CONTRACTOR MUST REPORT ANY DISCREPANCIES WITH THE SYSTEM SUBGRADE SOIL'S BEARING CAPACITY TO THE DESIGN ENGINEER.
5. CHECK CHAMBERS FOR SHIPPING DAMAGE PRIOR TO INSTALLATION. UNITS THAT HAVE BEEN DAMAGED MUST NOT BE INSTALLED. CONTACT STORMTECH IMMEDIATELY UPON DISCOVERY OF ANY DAMAGE.
6. AASHTO M288 CLASS 2 NON-WOVEN GEOTEXTILE (FILTER FABRIC) MUST BE USED AS INDICATED IN THE PROJECT PLANS.
7. TO MAINTAIN ROW SEPARATION DISTANCES AND PREVENT CHAMBER DISPLACEMENT, PLACE STONE BETWEEN CHAMBER ROWS AND AROUND PERIMETER AS REQUIRED BY THE MOST CURRENT VERSION OF STORMTECH'S INSTALLATION INSTRUCTIONS.
8. BACKFILLING OVER THE CHAMBER SYSTEM MUST BE IN ACCORDANCE WITH THE MOST CURRENT VERSION OF STORMTECH'S INSTALLATION INSTRUCTIONS.
9. THE CONTRACTOR MUST REFER TO STORMTECH'S INSTALLATION INSTRUCTIONS FOR TABLES OF ACCEPTABLE VEHICLE LOADS AT VARIOUS DEPTHS OF COVER. THIS INFORMATION IS ALSO AVAILABLE AT WWW.STORMTECH.COM. THE CONTRACTOR IS RESPONSIBLE FOR PREVENTING VEHICLES THAT EXCEED STORMTECH'S REQUIREMENTS FROM TRAVELING ACROSS OR PARKING OVER THE STORMWATER SYSTEM. TEMPORARY FENCING, WARNING TAPE AND APPROPRIATELY LOCATED SIGNS ARE COMMONLY USED TO PREVENT UNAUTHORIZED VEHICLES FROM TRAVELING OVER THE STORMWATER SYSTEM.
10. THE CONTRACTOR MUST APPLY EROSION AND SEDIMENT CONTROL MEASURES TO PROTECT THE STORMWATER SYSTEM DURING ALL PHASES OF SITE CONSTRUCTION PER LOCAL CODES AND DESIGN ENGINEER'S SPECIFICATIONS.
11. STORMTECH PRODUCTS MUST BE DESIGNED AND INSTALLED IN ACCORDANCE WITH STORMTECH'S MINIMUM REQUIREMENTS AS NOTED IN THE STORMTECH DESIGN MANUAL. FAILURE TO DO SO WILL VOID THE LIMITED WARRANTY.
12. STORMTECH PRODUCT WARRANTY IS LIMITED. SEE CURRENT PRODUCT WARRANTY FOR DETAILS. TO ACQUIRE A COPY CALL STORMTECH AT 1-888-892-2694 OR VISIT WWW.STORMTECH.COM
13. CONTRACTOR SHOULD REFER TO GEOTECHNICAL REPORT PREPARED BY GEO-TECHNOLOGY ASSOCIATES, INC. DATED SEPTEMBER 2014 FOR SUBSURFACE SOIL AND INFILTRATION INVESTIGATION DATA AND GEOTECHNICAL CONSTRUCTION RECOMMENDATIONS.

FACILITY SPECIFIC OPERATION & MAINTENANCE GUIDELINES FOR SUBSURFACE INFILTRATION FACILITY

FUNCTION:	THESE STORMWATER FACILITIES ARE DESIGNED TO STORE AND INFILTRATE STORMWATER AND SHOULD NOT HOLD WATER FOR MORE THAN 48 HOURS.
INSPECTION:	SELF INSPECT SEMI-ANNUALLY (SPRING AND FALL) AND AFTER STORM EVENTS OF 2 INCHES OR MORE.
TRASH AND DEBRIS:	REMOVE TRASH AND DEBRIS ON A REGULAR BASIS FROM ALL INLETS AND OUTFALL STRUCTURES.
SOIL:	N/A
EROSION:	N/A
MOWING:	N/A
BUFFERS:	N/A
FENCING:	N/A
SPECIAL CONSIDERATIONS:	PROPERTY OWNER IS TO MAINTAIN THE FACILITY IN ACCORDANCE WITH THE STORMTECH MAINTENANCE REQUIREMENTS.

SUBSURFACE DETENTION WITH INFILTRATION SEQUENCE OF CONSTRUCTION

A. CONTRACTOR SHALL INSTALL ORANGE SAFETY FENCING AROUND EACH FACILITY LOCATION.
B. CONTRACTOR SHALL CONTACT THE CCR AT LEAST 3 WORKING DAYS BEFORE CONSTRUCTION OF THE BASIN COMMENCES SO THE CCR CAN BE ON-SITE. SEE CCR RESPONSIBILITIES IN GENERAL E&S CONTROL PLAN NOTES.
C. DRAINAGE AREA TO FACILITY IS TO BE STABILIZED OR TEMPORARILY DIVERTED AROUND FACILITY PRIOR TO INSTALLATION AND UNTIL SITE IS STABILIZED.
D. EXCAVATE THE INFILTRATION PRACTICE TO THE DESIGN DIMENSIONS FROM THE SIDE, USING A BACKHOE OR EXCAVATOR. NO HEAVY EQUIPMENT IS PERMITTED WITHIN THE FACILITY AREA.
E. HAVE GEOTECHNICAL ENGINEER EVALUATE THE SUBGRADE BEFORE PROCEEDING. A REPORT OF THESE FINDINGS MUST BE SUBMITTED TO AND ACCEPTED BY NEW CASTLE COUNTY ENGINEERING SECTION PRIOR PROCEEDING. IF THE REPORT IS NOT RECEIVED AND ACCEPTED PRIOR TO INSTALLATION, THE FACILITY WILL BE REMOVED AND REINSTALLED AT THE DEVELOPERS EXPENSE.
F. INSTALL GEOTEXTILE PER DESIGN ON THE TRENCH SIDES. LARGE TREE ROOTS ARE TO BE TRIMMED FLUSH WITH THE SIDES OF INFILTRATION TRENCHES TO PREVENT PUNCTURING OR TEARING OF THE FILTER FABRIC DURING SUBSEQUENT INSTALLATION PROCEDURES. WHEN LAYING OUT THE GEOTEXTILE, THE WIDTH SHOULD INCLUDE SUFFICIENT MATERIAL TO COMPENSATE FOR PERIMETER IRREGULARITIES IN THE TRENCH AND FOR A 6-INCH MINIMUM OVERLAP AT THE TOP OF THE TRENCH. THE FILTER FABRIC ITSELF SHOULD BE TUCKED UNDER THE SAND LAYER ON THE BOTTOM OF THE INFILTRATION TRENCH. STONES OR OTHER ANCHORING OBJECTS SHOULD BE PLACED ON THE FABRIC AT THE TRENCH SIDES. TO KEEP THE TRENCH OPEN DURING WINDY PERIODS, VOIDS MAY OCCUR BETWEEN THE FABRIC AND THE EXCAVATED SIDES OF A TRENCH. NATURAL SOILS SHOULD BE PLACED IN ALL VOIDS, TO ENSURE THE FABRIC CONFORMS SMOOTHLY TO THE SIDES OF EXCAVATION.
G. SCARIFY THE BOTTOM OF THE INFILTRATION PRACTICE, AND SPREAD 6 INCHES OF SAND ON THE BOTTOM AS A FILTER LAYER PER DESIGN.
H. PLACE INLET AND OUTLET STRUCTURES WITHIN EXCAVATED AREA. INSTALL OUTLET CULVERT WITH INLINE CHECK VALVE. PER PLAN SPECIFICATION FOR PREVENTION OF BACKFLOW INTO THIS SYSTEM.
I. PLACE STONE TO BOTTOM ELEVATION OF STORAGE CHAMBERS, PLACE CHAMBERS AND HEADER PIPES PER DESIGN IN PLAN VIEW. ADD REMAINING STONE AND INSPECTION PORT(S).
J. PLACE END CAPS ON ALL PIPE INLETS INTO THE SUBSURFACE STORMTECH SYSTEM UNTIL UPSTREAM DRAINAGE AREA HAS BEEN STABILIZED. THIS WILL ALLOW ALL FLOW TO CONTINUE THROUGH THE PIPE CONVEYANCE SYSTEM.
K. AN AS-BUILT SURVEY MUST BE PERFORMED AND THE REQUIRED STORMWATER FACILITY POST-CONSTRUCTION VERIFICATION SUBMISSION SHALL BE SUBMITTED TO NEW CASTLE COUNTY WITHIN 45 DAYS AFTER FINAL COMPLETION OF THE FACILITY FOR FINAL APPROVAL PRIOR TO ISSUANCE OF A CERTIFICATE OF OCCUPANCY.

GENERAL OPERATION & MAINTENANCE GUIDELINES

THE SUBSURFACE INFILTRATION FACILITY SHALL BE MAINTAINED BY THE PROPERTY OWNER OR ASSIGNS OF THE PROPERTY.

1. THE DNREC SEDIMENT AND STORMWATER PROGRAM AND/OR THE RELEVANT DELEGATED AGENCY RESERVES THE RIGHT TO ENTER PRIVATE PROPERTY FOR PURPOSES OF PERIODIC SITE REVIEWS.
2. NEW CASTLE COUNTY DEPARTMENT OF LAND USE ENGINEERING SECTION SHALL BE NOTIFIED WITHIN 30 BUSINESS DAYS IF THE PROPERTY OWNERSHIP IS TRANSFERRED TO A NEW PERSON OR ENTITY.
3. THE DNREC SEDIMENT AND STORMWATER PROGRAM AND/OR THE RELEVANT DELEGATED AGENCY MAY SEEK ENFORCEMENT ACTION AGAINST ANY OWNER DEEMED NEGLIGENT IN FULFILLING THE OPERATION AND MAINTENANCE REQUIREMENTS OF THE DELAWARE SEDIMENT AND STORMWATER REGULATIONS.
4. NEW CASTLE COUNTY DEPARTMENT OF LAND USE ENGINEERING SECTION SHALL BE CONTACTED IF A CONCERN ARISES REGARDING A STORMWATER MANAGEMENT FACILITY, BEFORE ANY NON-ROUTINE MAINTENANCE, OR IF MODIFICATIONS TO THE FACILITY ARE DESIRED.
5. ANY DESIGN MODIFICATIONS MADE TO THE STORMWATER SYSTEM SHALL REQUIRE THE CREATION OF A NEW POST-CONSTRUCTION STORMWATER MANAGEMENT PLAN AND/OR OPERATIONS AND MAINTENANCE PLAN, WITH APPROVAL OF THE PLAN(S) BY NEW CASTLE COUNTY DEPARTMENT OF LAND USE ENGINEERING SECTION.
6. FOR ALL STORMWATER EASEMENT AREAS (i.e. ACCESS, MAINTENANCE, OR OFF-SITE) AND THE MINIMUM 10-FOOT WIDE ACCESSWAYS TO ALL STORMWATER FACILITIES AND THEIR STRUCTURAL COMPONENTS, REGULAR MOWING SHALL BE PERFORMED TO KEEP THE GRASS 6" OR LESS; NO TREES OR SHRUBS SHALL BE PLANTED, AND ANY FOUND GROWING SHALL BE REMOVED; AND NO PERMANENT STRUCTURES, SUCH AS FENCES OR SHEDS, SHALL BE LOCATED WITHIN THE EASEMENT OR ACCESSWAY.
7. BEFORE ANY EARTHWORK OR EXCAVATION TAKES PLACE, THE CONTRACTOR SHALL CALL MISS UTILITY AT 811 OR 1-800-282-8555 AT LEAST 48 HOURS PRIOR TO CONSTRUCTION TO HAVE ALL EXISTING UTILITIES MARKED ON SITE.

FACILITY #1 (SUBSURFACE INFILTRATION) HYDRAULIC DATA

STORM FREQ. (YRS.)	EXFILTRATION Q (CFS)	EXFILTRATION VOLUME (CU. FT.)	OUTFLOW Q (CFS)	OUTFLOW VOLUME (CU. FT.)	W.S. EL. (FT.)
1 (RPv)	0.16	5,582	0.00	0	219.51
10 (Cv)	0.16	9,534	0.00	0	220.33
100 (Fv)	0.16	12,357	0.00	0	221.20

FACILITY I.D.	D.A.	IMPERVIOUS
FACILITY #1 SUBSURFACE	1.04 AC.	0.56 ACRES

THIS PROPOSED SUB-SURFACE STORMWATER MANAGEMENT AREA IS TO BE CONSTRUCTED WITH STORMTECH SC-740 CHAMBERS (OR APPROVED EQUIVALENT)

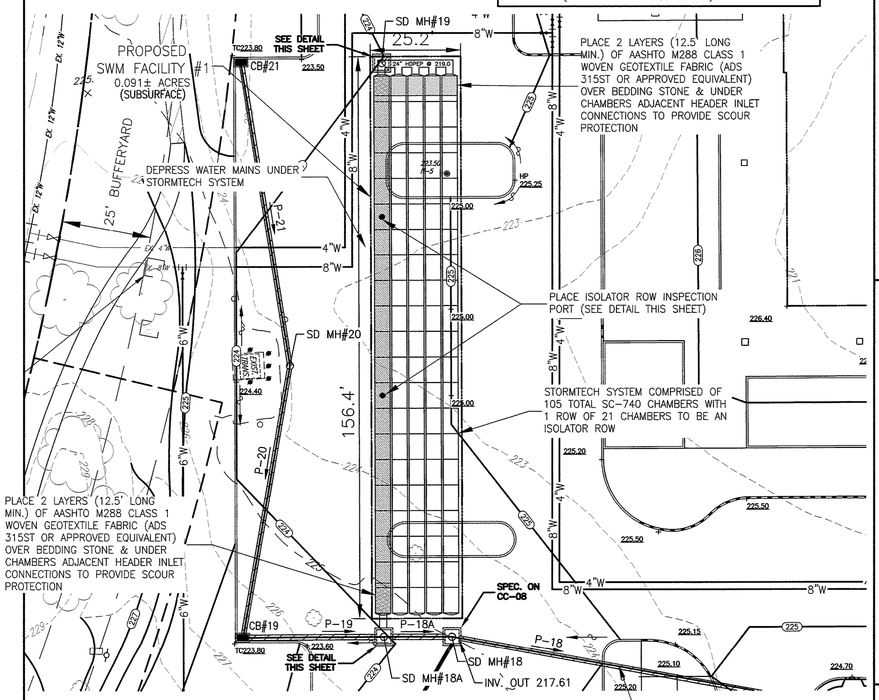

NEW PIPE SYSTEM FROM SD MH#18A TO THE EXISTING SYSTEM MUST BE INCLUDED IN SWM AS-BUILT SUBMITTAL PACKAGE SINCE THIS SYSTEM IS REPRESENTS THE OUTFALLS FOR THE UPSTREAM SWM FACILITIES

SWM FACILITY #1 (SUBSURFACE INFILTRATION)

SCALE: 1"=20'

CAREFUL FIELD REVIEW OF THE SOIL CONDITIONS AT THE BASE OF EACH STORMWATER MANAGEMENT FACILITY IS TO BE PERFORMED DURING CONSTRUCTION BY A QUALIFIED GEO-TECHNICAL ENGINEER THAT IS FAMILIAR WITH THE CURRENT GEO-TECHNICAL REPORT PREPARED BY GEO-TECHNOLOGY ASSOCIATES, INC.

ISOLATOR CHAMBER ROWS ONLY

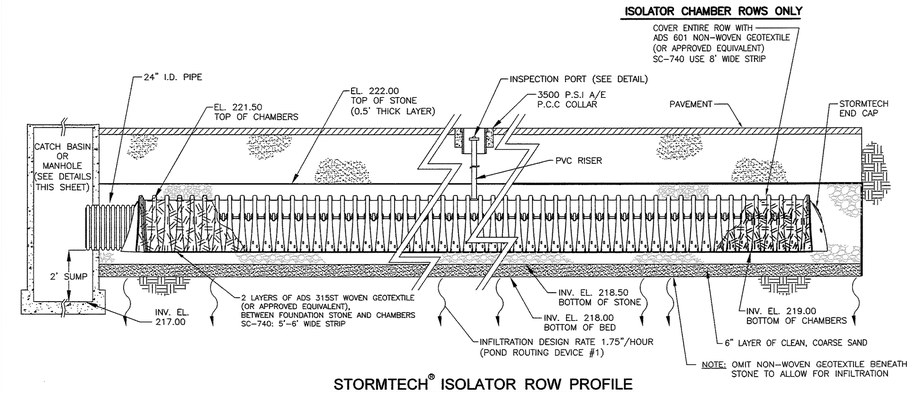

STORMTECH® ISOLATOR ROW PROFILE

N.T.S.

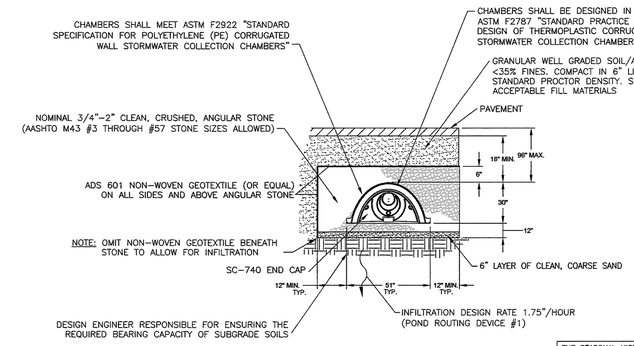

STORMTECH® TYPICAL SECTION

N.T.S.

THE SEASONAL HIGH GROUNDWATER LEVEL RANGES FROM ELEVATION 195 TO 200. SEE PAGE 19 OF THE REPORT OF GEOTECHNICAL EXPLORATION (REVISED) PREPARED BY GEO-TECHNOLOGY ASSOCIATES, INC. DATED APRIL 2015.

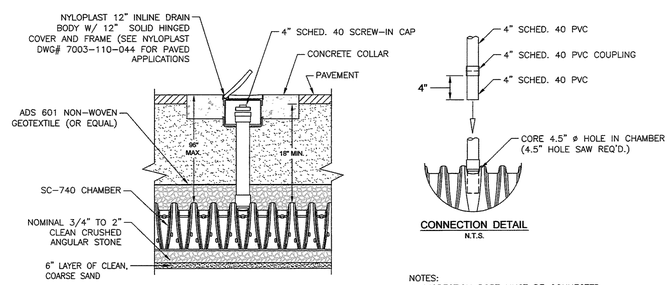

INSPECTION PORT DETAIL

N.T.S.

CONNECTION DETAIL

N.T.S.

NOTES:
1. INSPECTION PORT MUST BE CONNECTED THROUGH KNOCK-OUT LOCATED AT CENTER OF CHAMBER.
2. ALL SCHEDULE 40 FITTINGS TO BE SOLVENT CEMENTED.

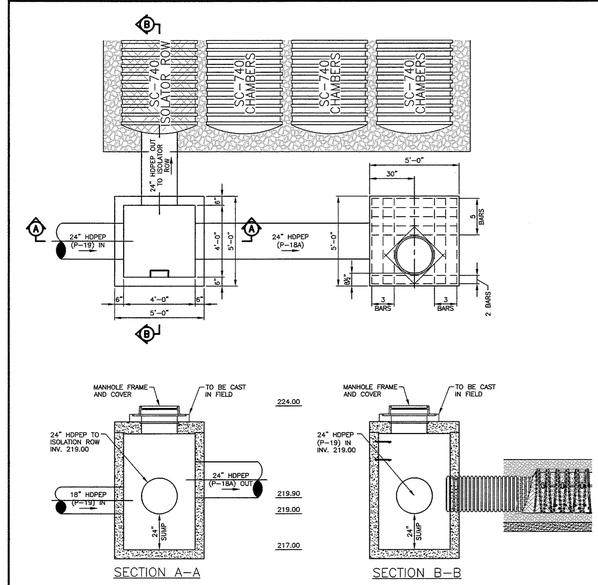

STORM MANHOLE #18A DETAIL

N.T.S.

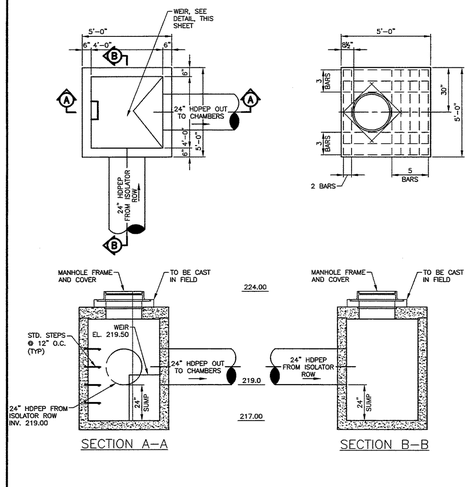

STORM MANHOLE #19 DETAIL

N.T.S.

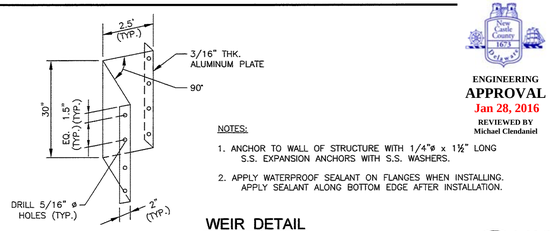

NOTES:
1. ANCHOR TO WALL OF STRUCTURE WITH 1/4"ø x 1½" LONG S.S. EXPANSION ANCHORS WITH S.S. WASHERS.
2. APPLY WATERPROOF SEALANT ON FLANGES WHEN INSTALLING. APPLY SEALANT ALONG BOTTOM EDGE AFTER INSTALLATION.

WEIR DETAIL

N.T.S.

SPECIFICATIONS FOR ALL STORM SEWER PIPES AND STRUCTURES PROVIDED ON GENERAL DEVELOPMENT PLAN SHEETS CC-08 THROUGH CC-11 EXCEPT AS OTHERWISE DETAILED ON STORMWATER DETAIL SHEETS CE-16 THROUGH CE-21 AND CC-03

ENGINEERING APPROVAL
Jan 28, 2016
REVIEWED BY Michael Clendaniel

Know what's below. Call before you dig.
MISS UTILITY PHONE 1-800-282-8555
PROTECT YOURSELF, GIVE THREE WORKING DAYS NOTICE

REVISIONS		CHECKED BY
1. REV. PER NCC REVIEW COMMENTS DATED 11-06-15		11-10-15
2. REV. PER NCC REVIEW COMMENTS DATED 1-19-16		1-19-16
3. ISSUED FOR CONSTRUCTION 1-27-2016		1-27-16

APPLICATION NO. 2015-0556-S
POST-CONSTRUCTION STORMWATER MANAGEMENT PLAN-FACILITY #1
FOR
THE COMMONS AT LITTLE FALLS
SEDIMENT & STORMWATER MANAGEMENT PLANS
CHRISTIANA HUNDRED - NEW CASTLE COUNTY, DELAWARE

CSC SPECTRUM LITTLE FALLS, LLC & NWC-SPE LLC
C/O TREFOIL PROPERTIES LP
1680 SUMNEYTOWN PIKE, SUITE 240
LANSDALE, PA 19446
(215) 855-5100

Landmark Science & Engineering
100 WEST COMMONS BOULEVARD, SUITE 501
NEW CASTLE, DELAWARE 19720
PHONE - (302) 323-9377 • FAX - (302) 323-9963
INFO@LANDMARK-SE.COM • WWW.LANDMARK-SE.COM
NEW CASTLE, DE (302) 323-9377
DOVER, DE (302) 734-9597
HAYRE DE GRACE, MD (410) 939-2144

THIS DRAWING AND THE DESIGN SHOWN ARE THE PROPERTY OF LANDMARK SCIENCE AND ENGINEERING AND SHALL NOT BE REPRODUCED OR COPIED WITHOUT WRITTEN PERMISSION.

THIS DRAWING DOES NOT INCLUDE NECESSARY COMPONENTS FOR CONSTRUCTION SAFETY.

ALL CONSTRUCTION MUST BE DONE IN ACCORDANCE WITH OSHA STANDARDS FOR SAFETY AND HEALTH, ACT OF 1970 AND THE RULES AND REGULATIONS THERETO APPURTENANT THERETO.

DRAWN BY: ALL	SCALE: AS NOTED		
DESIGNED BY: MKB	DATE: 8/26/15	LAST MODIFIED	1/27/16
CHECKED BY: TCW			
COMM. NO. C1115-15	FILE NO.: XXX		
DRAWING NAME: SWM DETAILS.DWG		SHEET NO. CE-16 of 21	

CE-16

© 2016 LANDMARK SCIENCE & ENGINEERING

P:\C1115-15 THE COMMONS AT LITTLE FALLS PARKING GARAGE\DWG\CNST\S & SY\POST-CNST\SWM DETAILS.DWG

BIORETENTION AREA SEQUENCE OF CONSTRUCTION

A. CONTRACTOR SHALL INSTALL ORANGE SAFETY FENCING AROUND EACH FACILITY LOCATION.

B. CONTRACTOR SHALL CONTACT THE CCR AT LEAST 3 WORKING DAYS BEFORE CONSTRUCTION OF THE BASIN COMMENCES SO THE CCR CAN BE ON-SITE. SEE CCR RESPONSIBILITIES IN GENERAL E&S CONTROL PLAN NOTES.

C. CONSTRUCTION OF THE BIORETENTION FACILITY MAY ONLY BEGIN AFTER THE ENTIRE CONTRIBUTING DRAINAGE AREA HAS BEEN STABILIZED WITH VEGETATION. IT MAY BE NECESSARY TO BLOCK CERTAIN CURB OR OTHER INLETS WHILE THE BIORETENTION AREA IS BEING CONSTRUCTED. THE PROPOSED SITE SHOULD BE CHECKED FOR EXISTING UTILITIES PRIOR TO ANY EXCAVATION.

D. TEMPORARY EROSION AND SEDIMENT CONTROLS (E.G., DIVERSION DIKES, REINFORCED SILT FENCE) ARE NEEDED DURING CONSTRUCTION OF THE BIORETENTION FACILITY TO DIVERT STORMWATER AWAY FROM THE BIORETENTION FACILITY UNTIL IT IS COMPLETED. SPECIAL PROTECTION MEASURES SUCH AS EROSION CONTROL FABRICS MAY BE NEEDED TO PROTECT VULNERABLE SIDE SLOPES FROM EROSION DURING THE CONSTRUCTION PROCESS.

E. ANY PRE-TREATMENT CELLS SHOULD BE EXCAVATED FIRST.

F. EXCAVATE THE INFILTRATION PRACTICE TO THE DESIGN DIMENSIONS FROM THE SIDE, USING A BACKHOE OR EXCAVATOR. NO HEAVY EQUIPMENT IS PERMITTED WITHIN THE FACILITY AREA. EXCAVATING EQUIPMENT SHOULD HAVE ADEQUATE REACH SO THEY DO NOT HAVE TO SIT INSIDE THE FOOTPRINT OF THE BIORETENTION FACILITY. CONTRACTORS ARE TO USE A CELL CONSTRUCTION APPROACH IN LARGER BIORETENTION BASINS, WHEREBY THE BASIN IS SPLIT INTO 500 TO 1,000 SQ. FT. TEMPORARY CELLS WITH A 10-15 FOOT EARTH BRIDGE IN BETWEEN, SO THAT CELLS CAN BE EXCAVATED FROM THE SIDE.

G. IT MAY BE NECESSARY TO RIP OR TILL THE BOTTOM SOILS TO A DEPTH OF 6 TO 12 INCHES TO PROMOTE GREATER INFILTRATION IF A BUCKET WITHOUT TEETH IS USED FOR EXCAVATION.

H. HAVE GEOTECHNICAL ENGINEER EVALUATE THE SUBGRADE BEFORE PROCEEDING.

I. ANCHOR THE OBSERVATION WELL(S), AND ADD STONE IN ACCORDANCE WITH NEXT STEP.

L. A STONE STORAGE LAYER IS PROPOSED, PLACE THE APPROPRIATE DEPTH OF DE NO. 3 ON THE BOTTOM,

M. THE BIOSOIL MEDIA MUST COME FROM AN APPROVED SUPPLIER. IF NOT USED UPON DELIVERY, STORE IT ON AN ADJACENT IMPERVIOUS AREA OR PLASTIC SHEETING. APPLY THE MEDIA IN 12-INCH LIFTS UNTIL THE DESIRED TOP ELEVATION OF THE BIORETENTION FACILITY IS ACHIEVED. WAIT A FEW DAYS TO CHECK FOR SETTLEMENT, AND ADD ADDITIONAL MEDIA, AS NEEDED, TO ACHIEVE THE DESIGN ELEVATION. SPRINKLING WITH WATER BETWEEN LIFTS MAY REDUCE THE AMOUNT OF SETTLING THAT OCCURS.

N. PREPARE PLANTING HOLES FOR ANY SHRUBS AND PLANTS AS SHOWN ON THE APPROVED LANDSCAPE PLAN, INSTALL THE VEGETATION, AND WATER ACCORDINGLY. INSTALL ANY TEMPORARY IRRIGATION.

O. USE SOD, WHERE APPLICABLE TO ESTABLISH A DENSE TURF COVER FOR AT LEAST 10 FEET AROUND THE SIDES OF THE FACILITY, TO REDUCE EROSION AND SLOUGHING.

P. PLACE THE SURFACE COVER IN BOTH CELLS (MULCH, RIVER ROCK, ETC.), DEPENDING ON THE DESIGN DETAILS. IF STABILIZATION MATTING WILL BE USED IN AREAS THAT WILL BE PLANTED, THE MATTING WILL NEED TO BE INSTALLED PRIOR TO PLANTING, AND HOLES OR SLITS WILL HAVE TO BE CUT IN THE MATTING TO INSTALL THE PLANTS.

Q. INSTALL THE PLANT MATERIALS AS SHOWN IN THE APPROVED LANDSCAPE PLAN, AND WATER THEM AT THE END OF EACH DAY DURING WEEKS OF NO RAIN FOR THE FIRST TWO MONTHS.

R. IF CURB CUTS OR INLETS WERE BLOCKED DURING BIORETENTION INSTALLATION, UNBLOCK THESE AFTER THE DRAINAGE AREA AND SIDE SLOPES HAVE GOOD VEGETATIVE COVER. IT IS RECOMMENDED THAT UNBLOCKING CURB CUTS AND INLETS TAKE PLACE AFTER TWO TO THREE STORM EVENTS IF THE DRAINAGE AREA INCLUDES NEWLY INSTALLED ASPHALT, SINCE NEW ASPHALT TENDS TO PRODUCE A LOT OF FINES AND GRIT DURING THE FIRST SEVERAL STORMS.

S. AN AS-BUILT SURVEY MUST BE PERFORMED AND THE REQUIRED STORMWATER FACILITY POST-CONSTRUCTION VERIFICATION SUBMISSION SHALL BE SUBMITTED TO NEW CASTLE COUNTY AFTER FINAL COMPLETION OF THE FACILITY FOR APPROVAL PRIOR TO ISSUANCE OF A CERTIFICATE OF OCCUPANCY.

GENERAL OPERATION & MAINTENANCE GUIDELINES

THE BIORETENTION AREA SHALL BE MAINTAINED BY THE PROPERTY OWNER OR ASSIGNS OF THE PROPERTY. REQUIRED MAINTENANCE FOR THESE FACILITIES INCLUDES INSPECTION AND REPAIR OR REPLACEMENT OF THE TREATMENT AREA COMPONENTS.

1. THE DNREC SEDIMENT AND STORMWATER PROGRAM AND/OR THE RELEVANT DELEGATED AGENCY RESERVES THE RIGHT TO ENTER PRIVATE PROPERTY FOR PURPOSES OF PERIODIC SITE REVIEWS.
2. NEW CASTLE COUNTY DEPARTMENT OF LAND USE ENGINEERING SECTION SHALL BE NOTIFIED WITHIN 30 BUSINESS DAYS IF THE PROPERTY OWNERSHIP IS TRANSFERRED TO A NEW PERSON OR ENTITY.
3. THE DNREC SEDIMENT AND STORMWATER PROGRAM AND/OR THE RELEVANT DELEGATED AGENCY MAY SEEK ENFORCEMENT ACTION AGAINST ANY OWNER DEEMED NEGLIGENT IN FULFILLING THE OPERATION AND MAINTENANCE REQUIREMENTS OF THE DELAWARE SEDIMENT AND STORMWATER REGULATIONS.
4. NEW CASTLE COUNTY DEPARTMENT OF LAND USE ENGINEERING SECTION SHALL BE CONTACTED IF A CONCERN ARISES REGARDING A STORMWATER MANAGEMENT FACILITY, BEFORE ANY NON-ROUTINE MAINTENANCE, OR IF MODIFICATIONS TO THE FACILITY ARE DESIRED.
5. ANY DESIGN MODIFICATIONS MADE TO THE STORMWATER SYSTEM SHALL REQUIRE THE CREATION OF A NEW POST-CONSTRUCTION STORMWATER MANAGEMENT PLAN AND/OR OPERATIONS AND MAINTENANCE PLAN, WITH APPROVAL OF THE PLAN(S) BY NEW CASTLE COUNTY DEPARTMENT OF LAND USE ENGINEERING SECTION.
6. FOR ALL STORMWATER EASEMENT AREAS (i.e. ACCESS, MAINTENANCE, OR OFF-SITE) AND THE MINIMUM 10-FOOT WIDE ACCESSWAYS TO ALL STORMWATER FACILITIES AND THEIR STRUCTURAL COMPONENTS, REGULAR MOWING SHALL BE PERFORMED TO KEEP THE GRASS 6" OR LESS; NO TREES OR SHRUBS SHALL BE PLANTED, AND ANY FOUND GROWING SHALL BE REMOVED; AND NO PERMANENT STRUCTURES, SUCH AS FENCES OR SHEDS, SHALL BE LOCATED WITHIN THE EASEMENT OR ACCESSWAY.
7. TREES SHALL NOT BE PLANTED, AND SHALL BE REMOVED IF FOUND GROWING, ON AND WITHIN 15 FEET OF ALL POND EMBANKMENTS, ON POND SLOPES OR SAFETY BENCHES, AND WITHIN 10 FEET OF STRUCTURAL COMPONENTS, SUCH AS PIPE INLETS.
8. WHEN THE FACILITY IS EXCAVATED TO REMOVE ACCUMULATED SEDIMENT, THE DISPOSAL AREA SHALL BE PERMANENTLY STABILIZED SO THAT IT DOES NOT RE-CREATE AN EROSION PROBLEM. ANY MATERIAL TAKEN OFF-SITE SHALL STILL BE UTILIZED OR DISPOSED OF IN AN APPROVED DNREC MANNER.
9. BEFORE ANY EARTHWORK OR EXCAVATION TAKES PLACE, THE CONTRACTOR SHALL CALL MISS UTILITY AT 811 OR 1-800-282-8555 AT LEAST 48 HOURS PRIOR TO CONSTRUCTION TO HAVE ALL EXISTING UTILITIES MARKED ON SITE.

TYPICAL MAINTENANCE ACTIVITIES FOR BIORETENTION AREAS

MAINTENANCE ACTIVITY	SCHEDULE
• INSPECT THE SITE AFTER STORM EVENT THAT EXCEEDS 0.5 INCHES OF RAINFALL • STABILIZE ANY BARE OR ERODING AREAS IN THE CONTRIBUTING DRAINAGE AREA DURING INCLUDING THE BIORETENTION PERIMETER AREA ESTABLISHMENT, • WATER TREES AND SHRUBS PLANTED IN THE BIORETENTION PLANTING BED DURING THE FIRST GROWING SEASON. IN GENERAL, WATER EVERY 3 DAYS FOR FIRST MONTH, AND THEN WEEKLY DURING THE REMAINDER OF THE FIRST GROWING SEASON (APRIL – OCTOBER), DEPENDING ON RAINFALL.	AS NEEDED (FIRST YEAR)
• REMOVE DEBRIS AND BLOCKAGES • REPAIR UNDERCUT, ERODED, AND BARE SOIL AREAS TWICE A YEAR • MOWING OF THE BIORETENTION VEGETATED PERIMETER AREA AND BANKS (AS DIRECTED IN APPROVED O&M PLAN)	QUARTERLY OR AFTER MAJOR STORMS (>1 INCH RAINFALL)
• CLEANUP TO REMOVE TRASH, DEBRIS AND FLOATABLES • A FULL MAINTENANCE REVIEW • CHECK CONDITION OF OUTLET STRUCTURE • REPAIR BROKEN MECHANICAL COMPONENTS, IF NEEDED	TWICE A YEAR
• BIORETENTION PLANTING BED REPLACEMENT/REINFORCEMENT PLANTINGS	ONE TIME–DURING THE 2ND YEAR FOLLOWING CONSTRUCTION
• FOREBAY SEDIMENT REMOVAL (AS APPLICABLE) • FLUSH UNDERDRAIN SYSTEM (AS APPLICABLE)	EVERY 5 TO 7 YEARS
• REPAIR PIPES, OUTLET STRUCTURE AND SPILLWAY, AS NEEDED • REMOVE ANY ACCUMULATED SEDIMENT WITHIN FACILITY, AS NEEDED	FROM 5 TO 25 YEARS

P:\C1115-15 THE COMMONS AT LITTLE FALLS PARKING GARAGE\DWG\CNST\S & S\POST-CNST\SWM DETAILS.DWG

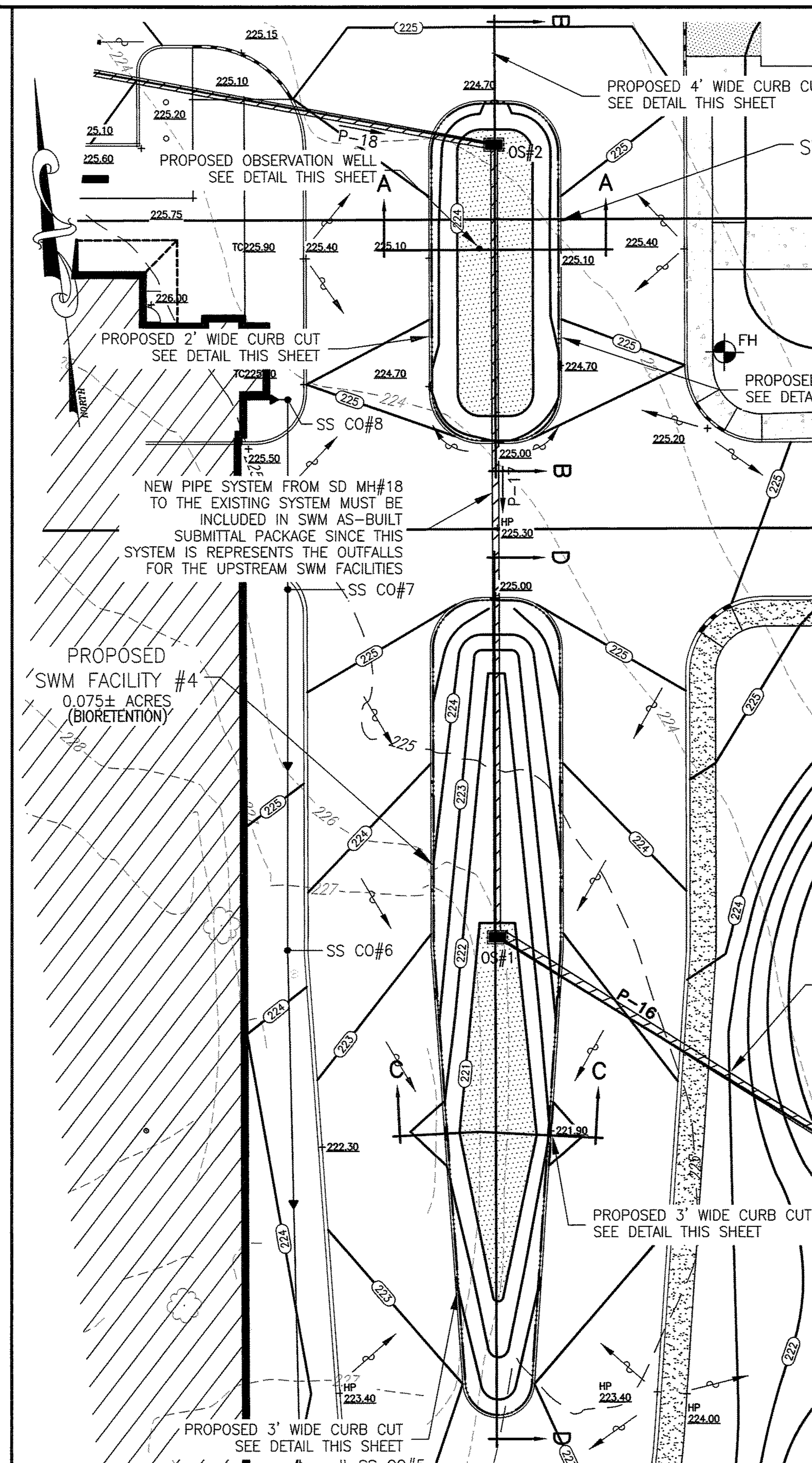

SWM FACILITIES #2 & #4 - BIORETENTION AREAS

SCALE: 1"=20'

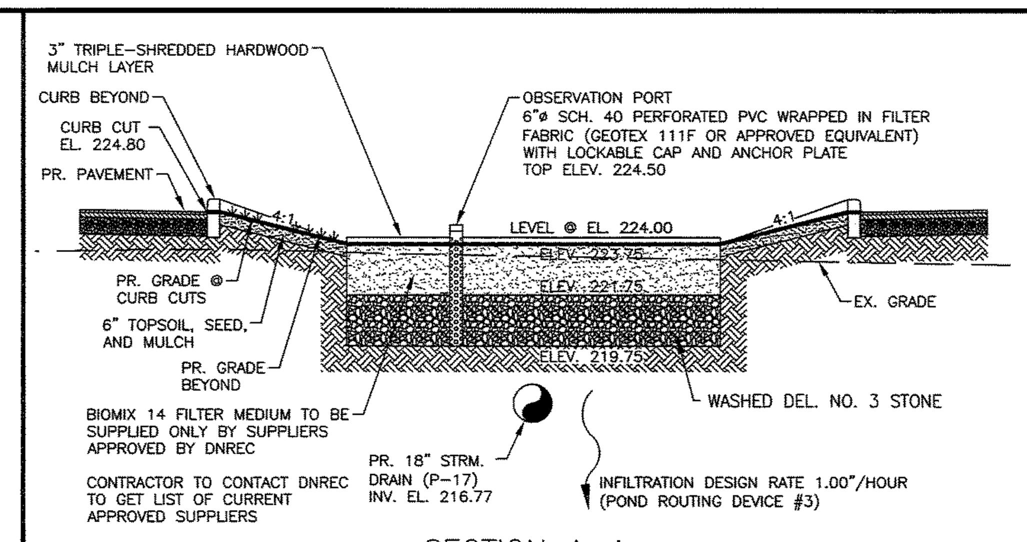

SECTION A-A

SCALE: 1" = 6'

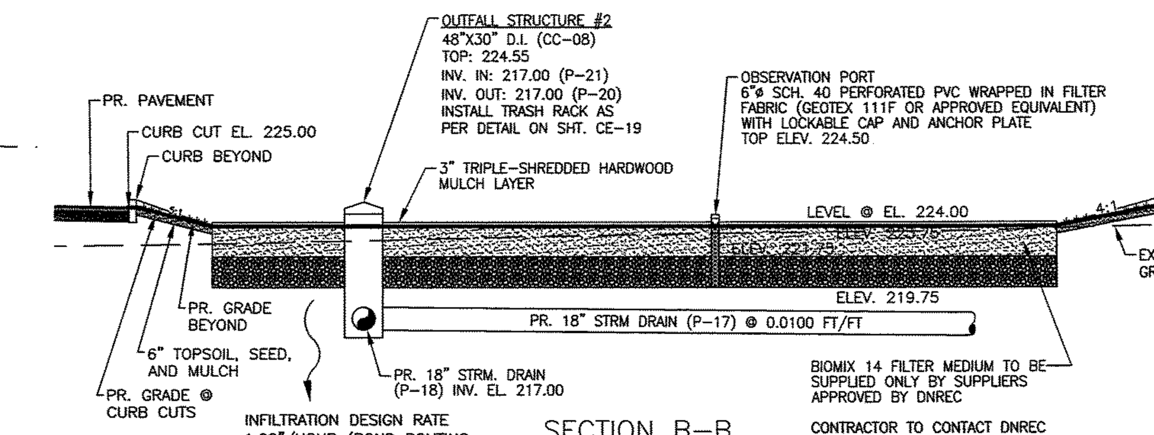

SECTION B-B

SCALE: 1" = 10'

SWM FACILITY #2 (BIO-RETENTION) CROSS-SECTIONS

SCALE: AS NOTED

THE SEASONAL HIGH GROUNDWATER LEVEL RANGES FROM ELEVATION 195 TO 200. SEE PAGE 19 OF THE REPORT OF GEOTECHNICAL EXPLORATION (REVISED) PREPARED BY GEO-TECHNOLOGY ASSOCIATES, INC. DATED APRIL 2015.

CAREFUL FIELD REVIEW OF THE SOIL CONDITIONS AT THE BASE OF EACH STORMWATER MANAGEMENT FACILITY IS TO BE PERFORMED DURING CONSTRUCTION BY A QUALIFIED GEO-TECHNICAL ENGINEER THAT IS FAMILIAR WITH THE CURRENT GEO-TECHNICAL REPORT PREPARED BY GEO-TECHNOLOGY ASSOCIATES, INC.

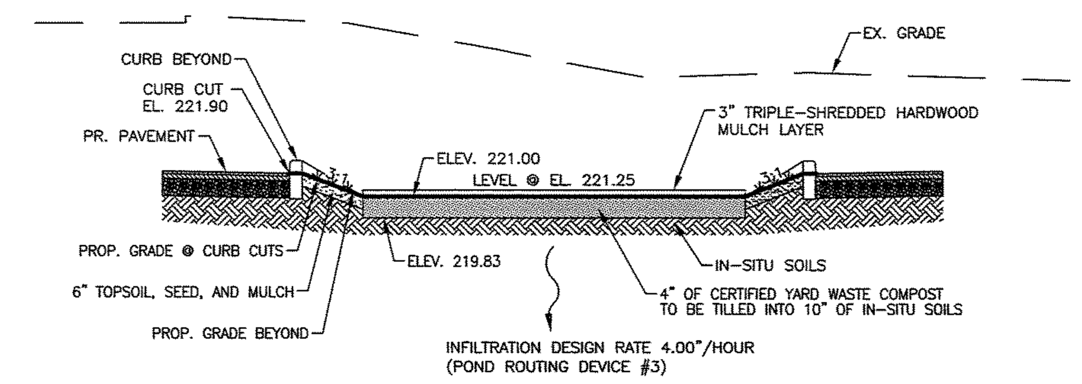

SECTION C-C

SCALE: 1" = 6'

New Castle County 1673 Delaware

ENGINEERING
APPROVAL
Jan 28, 2016
REVIEWED BY
Michael Clendaniel

SPECIFICATIONS FOR ALL STORM SEWER PIPES AND STRUCTURES PROVIDED ON GENERAL DEVELOPMENT PLAN SHEETS CC-08 THROUGH CC-11 EXCEPT AS OTHERWISE DETAILED ON STORMWATER DETAIL SHEETS CE-16 THROUGH CE-21 AND CC-03

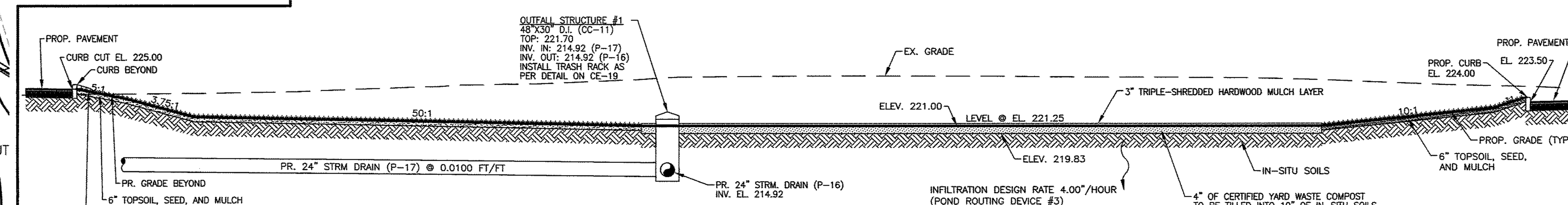

CROSS SECTION D-D - SWM FACILITY #4 (BIOTRETENTION)

SCALE: 1" = 10'

SWM FACILITY #4 (IN-SITU BIO-RETENTION) CROSS-SECTIONS

SCALE: AS NOTED

FACILITY SPECIFIC OPERATION & MAINTENANCE GUIDELINES FOR INFILTRATION BASINS

FUNCTION: BIORETENTION FACILITIES REMOVE CONTAMINANTS FROM RUNOFF BY FILTERING THROUGH AN ENGINEERED MEDIA AND INFILTRATE WATER INTO THE GROUND.

INSPECTION: SEMI-ANNUAL (SPRING AND FALL) & AFTER STORM EVENTS OF 2 INCHES OR MORE.

TRASH AND DEBRIS: REMOVE TRASH AND DEBRIS ON A REGULAR BASIS. IT IS ESPECIALLY IMPORTANT TO REMOVE DEBRIS FROM ALL INLETS AND OUTFALL STRUCTURES.

SOIL: SOIL SHOULD BE TESTED ANNUALLY TO ENSURE PROPER PH AND FERTILITY INCLUDING: ORGANIC MATTER, MAGNESIUM (MG), PHOSPHORUS (P205), NITROGEN (N), POTASSIUM (K20), AND SOLUBLE SALTS.
IF REQUIRED, FERTILIZER SHOULD ONLY BE APPLIED IN THE FALL.

EROSION: IF BARE SOIL EXISTS ON SIDE SLOPES, RESEED AND/OR REPLANT AS REQUIRED BASED UPON INSPECTION FINDINGS. STABILIZE APPLICABLE ERODED AREAS WITH ROLLED EROSION CONTROL PRODUCTS (RECP) OR TURF REINFORCING MATS (TRM), AS REQUIRED. IF RECP IS APPLIED, IT IS RECOMMENDED TO USE TRULY BIODEGRADABLE PRODUCTS TO AID IN MOWING MAINTENANCE AND TO PREVENT WILDLIFE ENTANGLEMENT. THESE PRODUCTS CAN BE RECOGNIZED AS HAVING A "BN" FOR BIONETTING OR "B" FOR BIODEGRADABLE.

MOWING: MOW AROUND FACILITY WEEKLY DURING PEAK GROWING SEASON (APRIL – NOVEMBER). MOW 10-FOOT WIDE ACCESS PATH TO ALL INLET AND OUTLET STRUCTURES, ALSO MOWING AROUND THESE STRUCTURES REGULARLY. USE MULCHING MOWER TO ENSURE THAT NUTRIENTS ARE RECYCLED. FOR WARM SEASON GRASSES, THE PREVIOUS SEASON'S STALKS SHOULD BE CUT DOWN TO 8-12 INCHES IN EARLY SPRING (MID MARCH), BEFORE NEW SEASON'S GROWTH EMERGES.

BUFFERS: NA

FENCING: NA

LANDSCAPE VEGETATION: MAINTAIN AS A LANDSCAPE ISLAND AND MANAGE VEGETATION ACCORDINGLY. CUT DOWN STANDING STALKS OF HERBACEOUS MATERIALS TO 12 INCHES JUST BEFORE GROWTH EMERGES IN SPRING (MID-MARCH). SELECTIVE APPLICATION OF HERBICIDES MAY REQUIRE A LICENSED PROFESSIONAL. RESEED OR REPLANT AS REQUIRED BASED UPON INSPECTION FINDINGS. INSPECT WOODY MATERIAL FOR PEST AND ICE DAMAGE. PRUNE TREES AND SHRUBS IN THE FALL. PLANTS ARE SPECIALLY SELECTED TO TOLERATE VARIABLE CONDITIONS SUCH AS SEVERE DROUGHT AND FLOODING, IN ADDITION TO SALTY CONDITIONS AS A RESULT OF ROAD SALT (WINTER CONDITIONS). REPLACE PLANTINGS AS NECESSARY.

MULCH: ADD DOUBLE OR TRIPLE-SHREDDED HARDWOOD MULCH, AS NEEDED, TO MAINTAIN A 3 INCH DEPTH FOR FACILITIES WITH MULCH TOP DRESSING.

SPECIAL CONSIDERATIONS: BIORETENTION FACILITIES ARE DESIGNED TO INFILTRATE WATER AND REMOVE POLLUTANTS FROM STORMWATER. DO NOT COMPACT FACILITY IN ANY WAY. THIS INCLUDES THE USE OF HEAVY EQUIPMENT OR MACHINERY. COMPACTION MAY LEAD TO SYSTEM FAILURE.

HIRE A PROFESSIONAL: IF FACILITY DOES NOT DRAIN WITHIN 48 HOURS; REMOVAL OF ACCUMULATED SEDIMENT IS NEEDED; REPLACEMENT OF BIOSOIL MIX (EVERY 15-20 YEARS); REPAIR OF SEVERE EROSION; VEGETATION CONTROL (CHEMICAL APPLICATION) IF LICENSING REQUIRED BY DE DEPARTMENT OF AGRICULTURE.

FACILITY #2 (BIORETENTION) HYDRAULIC DATA

STORM FREQ. (YRS.)	EXFILTRATION Q (CFS)	EXFILTRATION VOLUME (CU. FT.)	OUTFLOW Q (CFS)	OUTFLOW VOLUME (CU. FT.)	W.S. EL. (FT.)
1 (RPv)	0.03	2,903	0.00	0	224.50
10 (Cv)	0.03	3,454	2.61	2,679	224.74
100 (Fv)	0.03	3,658	4.80	7,552	224.83

FACILITY I.D.	D.A.	IMPERVIOUS
FACILITY #2 BIORETENTION	0.45 AC.	0.37 ACRES

FACILITY I.D.	D.A.	IMPERVIOUS
FACILITY #4 IN-SITU BIORETENTION	0.31 AC.	0.21 ACRES

FACILITY #4 (IN-SITU BIORETENTION) HYDRAULIC DATA

STORM FREQ. (YRS.)	EXFILTRATION Q (CFS)	EXFILTRATION VOLUME (CU. FT.)	OUTFLOW Q (CFS)	OUTFLOW VOLUME (CU. FT.)	W.S. EL. (FT.)
1 (RPv)	0.13	1,925	0.00	0	221.65
10 (Cv)	0.14	3,125	1.61	1,020	221.84
100 (Fv)	0.15	4,608	3.14	3,050	221.91

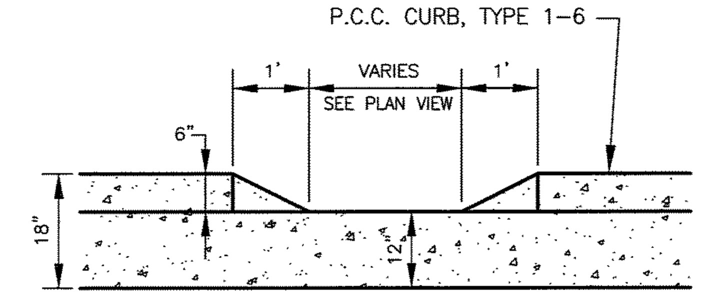

CURB CUT DETAIL

SCALE: 1"=2'

BIO RETENTION FACILITY

INSPECTION: SEMI-ANNUAL INSPECTIONS (SPRING AND FALL) & AFTER STORM EVENTS OF 2 INCHES OR MORE

PLANT MATERIALS: CUT DOWN STANDING STALKS OF HERBACEOUS MATERIAL TO 12 INCHES JUST BEFORE GROWTH EMERGES IN SPRING (MID-MARCH)

SOIL: SOIL SHOULD BE TESTED ANNUALLY TO ENSURE PROPER PH AND FERTILITY.

IF REQUIRED, FERTILIZER SHOULD ONLY BE APPLIED IN THE FALL.

MULCH: AS NEEDED; ADD TRIPLE SHREDDED MULCH EVERY SPRING TO MAINTAIN 3 INCH DEPTH FOR FACILITIES WITH MULCH TOP-DRESSING.

CONTACT: NEW CASTLE COUNTY SPECIAL SERVICES (302) 395-5700

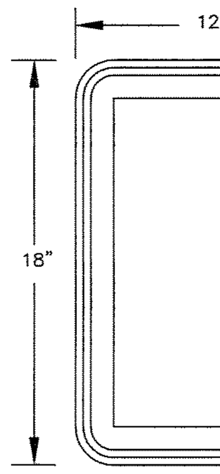

NOTES:

- SIGNS SHALL BE OF A VERTICAL HEIGHT OF AT LEAST 3 FEET, BUT NOT HIGHER THAN 7 FEET FROM GRADE IMMEDIATELY BELOW THE SIGN.
- SIGNS SHALL BE AT LEAST 12 INCHES WIDE BY 18 INCHES TALL.
- ALL SIGNS TO BE 0.080" THICK ALUMINUM.
- A SIGN, AS SHOWN ABOVE AND WITH VERBIAGE SHOWN FOR SPECIFIC BMP TYPE, IS TO BE INSTALLED ADJACENT TO EACH STORMWATER MANAGEMENT BMP FACILITY (SEE BMP PLAN FOR SIGN LOCATIONS)

BMP SIGN DETAIL

N.T.S.

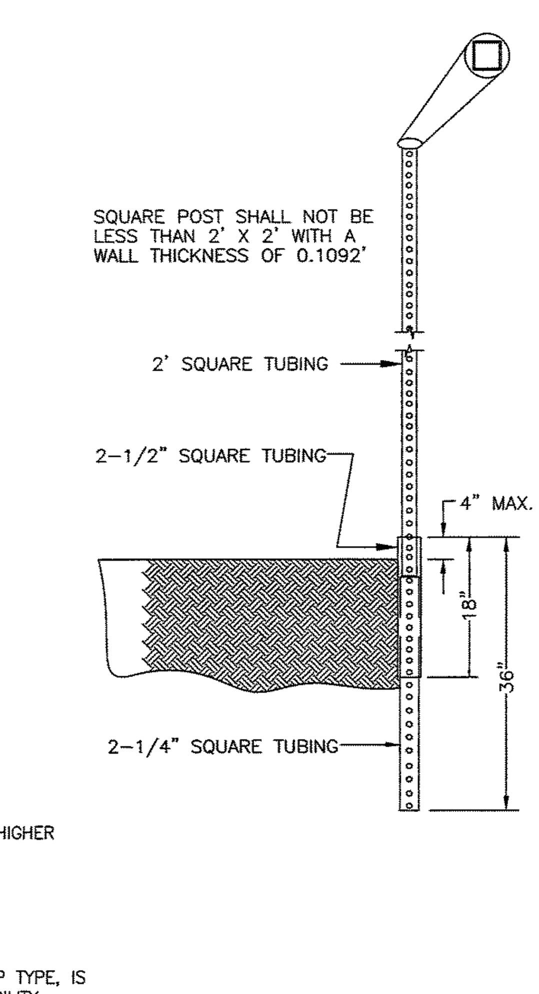

NOTES

1. SQUARE TUBES TO BE FORMED FROM GALVANIZED SHEET STRUCTURAL (PHYSICAL) QUALITY, ASTM A 446, GRADE A, COATING DESIGNATION G 90, REGULAR SPANGLE, OR HOT ROLLED CARBON SHEET STEEL STRUCTURAL (PHYSICAL) QUALITY, ASTM A 570, GRADE 33.

A. NOMINAL OUTSIDE DIMENSION (INCHES): 2 x 2 ± .008
2 1/4 x 2 1/4 ± .010
2 1/2 x 2 1/2 ± .010

B. ALL FOUR SIDES ARE TO HAVE EVENLY SPACED 7/16" DIAMETER HOLES ON 1" CENTERS THE ENTIRE LENGTH OF THE TUBE.

C. TOLERANCE ON HOLE SIZE IS ± 1/64". TOLERANCE ON HOLE SPACING IS ± 1/8" IN 20 FEET.

D. STANDARD CORNER RADIUS SHALL BE 5/32" ± 1/64".

E. THE FASTENERS TO BE SUPPLIED UNDER THE SPECIFICATION SHALL BE 5/16" GRADE 5 UNC CORNER BOLTS WITH CADMIUM OR ZINC PLATING, INSTALLATION OF SIGNS SHALL BE WITH 3/8" X 2 1/2" BOLT WITH LOCKNUT AND WASHER.

BREAK-AWAY SIGN POST ASSEMBLY DETAIL

N.T.S.

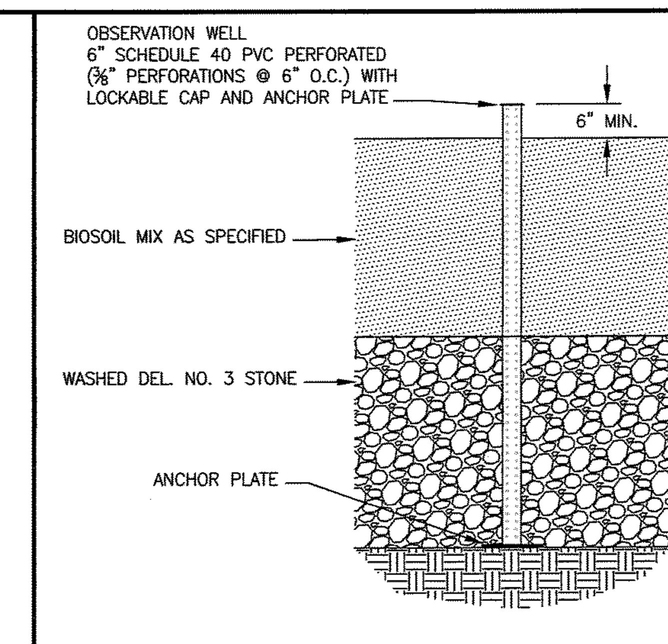

OBSERVATION WELL DETAIL

N.T.S.

TED C. WILLIAMS LICENSE No 8461 DELAWARE PROFESSIONAL ENGINEER

REVISIONS

REVISIONS	CHECKED BY
1. REV. PER NCC REVIEW COMMENTS DATED 11-06-15	TCW 11-10-15
2. REV. PER NCC REVIEW COMMENTS DATED 1-19-16	TCW 1-19-16
3. ISSUED FOR CONSTRUCTION 1-27-2016	TCW 1-27-16

APPLICATION NO. 2015-0556-S

POST-CONSTRUCTION STORMWATER MANAGEMENT PLAN-FACILITIES #2 & #4
FOR
THE COMMONS AT LITTLE FALLS
SEDIMENT & STORMWATER MANAGEMENT PLANS
CHRISTIANA HUNDRED – NEW CASTLE COUNTY, DELAWARE

OWNER
CSC SPECTRUM LITTLE FALLS, LLC & NWC-SPE LLC
C/O TREFOIL PROPERTIES LP
1690 SUMNEYTOWN PIKE, SUITE 240
LANSDALE, PA 19446
(215) 855-5100

NEW CASTLE, DE (302) 323-9377
DOVER, DE (302) 734-9597
HAVRE DE GRACE, MD (410) 939-2144

Landmark Science & Engineering
100 WEST COMMONS BOULEVARD, SUITE 301
NEW CASTLE, DELAWARE 19720
PHONE - (302) 323-9377 • FAX - (302) 323-9461
INFO@LANDMARK-SE.COM • WWW.LANDMARK-SE.COM

THIS DRAWING AND THE DESIGN SHOWN ARE THE EXCLUSIVE PROPERTY OF LANDMARK SCIENCE AND ENGINEERING AND SHALL NOT BE ALTERED OR COPIED WITHOUT WRITTEN PERMISSION.

THIS DRAWING DOES NOT INCLUDE NECESSARY COMPONENTS FOR CONSTRUCTION SAFETY.

ALL CONSTRUCTION MUST BE DONE IN COMPLIANCE WITH THE OCCUPATIONAL SAFETY AND HEALTH ACT OF 1970 AND THE RULES AND REGULATIONS THERETO APPURTENANT

DRAWN BY:	ALL	SCALE:	AS NOTED
DESIGNED BY:	TCW/JAV	DATE:	8/26/15
CHECKED BY:	TCW	LAST MODIFIED	1/27/16
COMM. NO.	C1115-15	FILE NO.:	XXX
DRAWING NAME:	SWM DETAILS.DWG		

CE-17

SHEET NO. CE-17 of 21

© 2016 LANDMARK SCIENCE & ENGINEERING

BIORETENTION AREA SEQUENCE OF CONSTRUCTION

A. CONTRACTOR SHALL INSTALL ORANGE SAFETY FENCING AROUND EACH FACILITY LOCATION.

B. CONTRACTOR SHALL CONTACT THE CCR AT LEAST 3 WORKING DAYS BEFORE CONSTRUCTION OF THE BASIN COMMENCES SO THE CCR CAN BE ON-SITE. SEE CCR RESPONSIBILITIES IN GENERAL E&S CONTROL PLAN NOTES.

C. CONSTRUCTION OF THE BIORETENTION FACILITY MAY ONLY BEGIN AFTER THE ENTIRE CONTRIBUTING DRAINAGE AREA HAS BEEN STABILIZED WITH VEGETATION. IT MAY BE NECESSARY TO BLOCK CERTAIN CURB OR OTHER INLETS WHILE THE BIORETENTION AREA IS BEING CONSTRUCTED. THE PROPOSED SITE SHOULD BE CHECKED FOR EXISTING UTILITIES PRIOR TO ANY EXCAVATION.

D. TEMPORARY EROSION AND SEDIMENT CONTROLS (E.G., DIVERSION DIKES, REINFORCED SILT FENCE) ARE NEEDED DURING CONSTRUCTION OF THE BIORETENTION FACILITY TO DIVERT STORMWATER AWAY FROM THE BIORETENTION FACILITY UNTIL IT IS COMPLETED. SPECIAL PROTECTION MEASURES SUCH AS EROSION CONTROL FABRICS MAY BE NEEDED TO PROTECT VULNERABLE SIDE SLOPES FROM EROSION DURING THE CONSTRUCTION PROCESS.

E. ANY PRE-TREATMENT CELLS SHOULD BE EXCAVATED FIRST.

F. EXCAVATE THE INFILTRATION PRACTICE TO THE DESIGN DIMENSIONS FROM THE SIDE, USING A BACKHOE OR EXCAVATOR. NO HEAVY EQUIPMENT IS PERMITTED WITHIN THE FACILITY AREA. EXCAVATING EQUIPMENT SHOULD HAVE ADEQUATE REACH SO THEY DO NOT HAVE TO SIT INSIDE THE FOOTPRINT OF THE BIORETENTION FACILITY. CONTRACTORS ARE TO USE A CELL CONSTRUCTION APPROACH IN LARGER BIORETENTION BASINS, WHEREBY THE BASIN IS SPLIT INTO 500 TO 1,000 SQ. FT. TEMPORARY CELLS WITH A 10-15 FOOT EARTH BRIDGE IN BETWEEN, SO THAT CELLS CAN BE EXCAVATED FROM THE SIDE.

G. IT MAY BE NECESSARY TO RIP OR TILL THE BOTTOM SOILS TO A DEPTH OF 6 TO 12 INCHES TO PROMOTE GREATER INFILTRATION IF A BUCKET WITHOUT TEETH IS USED FOR EXCAVATION.

H. HAVE GEOTECHNICAL ENGINEER EVALUATE THE SUBGRADE BEFORE PROCEEDING.

I. ANCHOR THE OBSERVATION WELL(S), AND ADD STONE IN ACCORDANCE WITH NEXT STEP.

L. IF A STONE STORAGE LAYER IS PROPOSED FOR AN UNDERDRAIN DESIGN, PLACE THE APPROPRIATE DEPTH OF RICE GRAVEL ON THE BOTTOM, INSTALL THE PERFORATED UNDERDRAIN PIPE, PACK RICE GRAVEL TO 3 INCHES ABOVE THE UNDERDRAIN PIPE. A STONE LAYER MAY ALSO BE NECESSARY FOR AN INFILTRATING DESIGN IF THE 24" OF BIOSOIL MEDIA DOES NOT REACH A PERMEABLE LAYER IN THE SOIL PROFILE.

M. THE BIOSOIL MEDIA MUST COME FROM AN APPROVED SUPPLIER. IF NOT USED UPON DELIVERY, STORE IT ON AN ADJACENT IMPERVIOUS AREA OR PLASTIC SHEETING. APPLY THE MEDIA IN 12-INCH LIFTS UNTIL THE DESIRED TOP ELEVATION OF THE BIORETENTION FACILITY IS ACHIEVED. WAIT A FEW DAYS TO CHECK FOR SETTLEMENT, AND ADD ADDITIONAL MEDIA, AS NEEDED, TO ACHIEVE THE DESIGN ELEVATION. SPRINKLING WITH WATER BETWEEN LIFTS MAY REDUCE THE AMOUNT OF SETTLING THAT OCCURS.

N. PREPARE PLANTING HOLES FOR ANY SHRUBS AND PLANTS AS SHOWN ON THE APPROVED LANDSCAPE PLAN, INSTALL THE VEGETATION, AND WATER ACCORDINGLY. INSTALL ANY TEMPORARY IRRIGATION.

O. USE SOD, WHERE APPLICABLE TO ESTABLISH A DENSE TURF COVER FOR AT LEAST 10 FEET AROUND THE SIDES OF THE FACILITY, TO REDUCE EROSION AND SLOUGHING.

P. PLACE THE SURFACE COVER IN BOTH CELLS (MULCH, RIVER ROCK, ETC.), DEPENDING ON THE DESIGN DETAILS. IF STABILIZATION MATTING WILL BE USED IN AREAS THAT WILL BE PLANTED, THE MATTING WILL NEED TO BE INSTALLED PRIOR TO PLANTING, AND HOLES OR SLITS WILL HAVE TO BE CUT IN THE MATTING TO INSTALL THE PLANTS.

Q. INSTALL THE PLANT MATERIALS AS SHOWN IN THE APPROVED LANDSCAPE PLAN, AND WATER THEM AT THE END OF EACH DAY DURING WEEKS OF NO RAIN FOR THE FIRST TWO MONTHS.

R. IF CURB CUTS OR INLETS WERE BLOCKED DURING BIORETENTION INSTALLATION, UNBLOCK THESE AFTER THE DRAINAGE AREA AND SIDE SLOPES HAVE GOOD VEGETATIVE COVER. IT IS RECOMMENDED THAT UNBLOCKING CURB CUTS AND INLETS TAKE PLACE AFTER TWO TO THREE STORM EVENTS IF THE DRAINAGE AREA INCLUDES NEWLY INSTALLED ASPHALT, SINCE NEW ASPHALT TENDS TO PRODUCE A LOT OF FINES AND GRIT DURING THE FIRST SEVERAL STORMS.

S. AN AS-BUILT SURVEY MUST BE PERFORMED AND THE REQUIRED STORMWATER FACILITY POST-CONSTRUCTION VERIFICATION SUBMISSION SHALL BE SUBMITTED TO NEW CASTLE COUNTY AFTER FINAL COMPLETION OF THE FACILITY FOR APPROVAL PRIOR TO ISSUANCE OF A CERTIFICATE OF OCCUPANCY.

GENERAL OPERATION & MAINTENANCE GUIDELINES

THE BIORETENTION AREA SHALL BE MAINTAINED BY THE PROPERTY OWNER OR ASSIGNS OF THE PROPERTY. REQUIRED MAINTENANCE FOR THESE FACILITIES INCLUDES INSPECTION AND REPAIR OR REPLACEMENT OF THE TREATMENT AREA COMPONENTS.

1. THE DNREC SEDIMENT AND STORMWATER PROGRAM AND/OR THE RELEVANT DELEGATED AGENCY RESERVES THE RIGHT TO ENTER PRIVATE PROPERTY FOR PURPOSES OF PERIODIC SITE REVIEWS.
2. NEW CASTLE COUNTY DEPARTMENT OF LAND USE ENGINEERING SECTION SHALL BE NOTIFIED WITHIN 30 BUSINESS DAYS IF THE PROPERTY OWNERSHIP IS TRANSFERRED TO A NEW PERSON OR ENTITY.
3. THE DNREC SEDIMENT AND STORMWATER PROGRAM AND/OR THE RELEVANT DELEGATED AGENCY MAY SEEK ENFORCEMENT ACTION AGAINST ANY OWNER DEEMED NEGLIGENT IN FULFILLING THE OPERATION AND MAINTENANCE REQUIREMENTS OF THE DELAWARE SEDIMENT AND STORMWATER REGULATIONS.
4. NEW CASTLE COUNTY DEPARTMENT OF LAND USE ENGINEERING SECTION SHALL BE CONTACTED IF A CONCERN ARISES REGARDING A STORMWATER MANAGEMENT FACILITY, BEFORE ANY NON-ROUTINE MAINTENANCE, OR IF MODIFICATIONS TO THE FACILITY ARE DESIRED.
5. ANY DESIGN MODIFICATIONS MADE TO THE STORMWATER SYSTEM SHALL REQUIRE THE CREATION OF A NEW POST-CONSTRUCTION STORMWATER MANAGEMENT PLAN AND/OR OPERATIONS AND MAINTENANCE PLAN, WITH APPROVAL OF THE PLAN(S) BY NEW CASTLE COUNTY DEPARTMENT OF LAND USE ENGINEERING SECTION.
6. FOR ALL STORMWATER EASEMENT AREAS (i.e. ACCESS, MAINTENANCE, OR OFF-SITE) AND THE MINIMUM 10-FOOT WIDE ACCESSWAYS TO ALL STORMWATER FACILITIES AND THEIR STRUCTURAL COMPONENTS, REGULAR MOWING SHALL BE PERFORMED TO KEEP THE GRASS 6" OR LESS; NO TREES OR SHRUBS SHALL BE PLANTED, AND ANY FOUND GROWING SHALL BE REMOVED; AND NO PERMANENT STRUCTURES, SUCH AS FENCES OR SHEDS, SHALL BE LOCATED WITHIN THE EASEMENT OR ACCESSWAY.
7. TREES SHALL NOT BE PLANTED, AND SHALL BE REMOVED IF FOUND GROWING, ON AND WITHIN 15 FEET OF ALL POND EMBANKMENTS, ON POND SLOPES OR SAFETY BENCHES, AND WITHIN 10 FEET OF STRUCTURAL COMPONENTS, SUCH AS PIPE INLETS.
8. WHEN THE FACILITY IS EXCAVATED TO REMOVE ACCUMULATED SEDIMENT, THE DISPOSAL AREA SHALL BE PERMANENTLY STABILIZED SO THAT IT DOES NOT RE-CREATE AN EROSION PROBLEM. ANY MATERIAL TAKEN OFF-SITE SHALL STILL BE UTILIZED OR DISPOSED OF IN AN APPROVED DNREC MANNER.
9. BEFORE ANY EARTHWORK OR EXCAVATION TAKES PLACE, THE CONTRACTOR SHALL CALL MISS UTILITY AT 811 OR 1-800-282-8555 AT LEAST 48 HOURS PRIOR TO CONSTRUCTION TO HAVE ALL EXISTING UTILITIES MARKED ON SITE.

TYPICAL MAINTENANCE ACTIVITIES FOR BIORETENTION AREAS

MAINTENANCE ACTIVITY	SCHEDULE
• INSPECT THE SITE AFTER STORM EVENT THAT EXCEEDS 0.5 INCHES OF RAINFALL • STABILIZE ANY BARE OR ERODING AREAS IN THE CONTRIBUTING DRAINAGE AREA DURING INCLUDING THE BIORETENTION PERIMETER AREA ESTABLISHMENT, • WATER TREES AND SHRUBS PLANTED IN THE BIORETENTION PLANTING BED DURING THE FIRST GROWING SEASON. IN GENERAL, WATER EVERY 3 DAYS FOR FIRST MONTH, AND THEN WEEKLY DURING THE REMAINDER OF THE FIRST GROWING SEASON (APRIL – OCTOBER), DEPENDING ON RAINFALL.	AS NEEDED (FIRST YEAR)
• REMOVE DEBRIS AND BLOCKAGES • REPAIR UNDERCUT, ERODED, AND BARE SOIL AREAS TWICE A YEAR • MOWING OF THE BIORETENTION VEGETATED PERIMETER AREA AND BANKS (AS DIRECTED IN APPROVED O&M PLAN)	QUARTERLY OR AFTER MAJOR STORMS (>1 INCH RAINFALL)
• CLEANUP TO REMOVE TRASH, DEBRIS AND FLOATABLES • A FULL MAINTENANCE REVIEW • CHECK CONDITION OF OUTLET STRUCTURE • REPAIR BROKEN MECHANICAL COMPONENTS, IF NEEDED	TWICE A YEAR
• BIORETENTION PLANTING BED REPLACEMENT/REINFORCEMENT PLANTINGS	ONE TIME-DURING THE 2ND YEAR FOLLOWING CONSTRUCTION
• FOREBAY SEDIMENT REMOVAL (AS APPLICABLE) • FLUSH UNDERDRAIN SYSTEM (AS APPLICABLE)	EVERY 5 TO 7 YEARS
• REPAIR PIPES, OUTLET STRUCTURE AND SPILLWAY, AS NEEDED • REMOVE ANY ACCUMULATED SEDIMENT WITHIN FACILITY, AS NEEDED	FROM 5 TO 25 YEARS

P:\C1115-15 THE COMMONS AT LITTLE FALLS PARKING GARAGE\DWG\CNST\S & S\POST-CNST\SWM DETAILS.DWG

FACILITY #3 (BIORETENTION) HYDRAULIC DATA

STORM FREQ. (YRS.)	EXFILTRATION Q (CFS)	EXFILTRATION VOLUME (CU. FT.)	OUTFLOW Q (CFS)	OUTFLOW VOLUME (CU. FT.)	W.S. EL. (FT.)
1 (RPv)	0.37	20,662	0.00	0.00	216.80
10 (Cv)	0.45	30,448	6.51	11,529	217.40
100 (Fv)	0.52	36,962	27.03	28,167	218.05

FACILITY I.D.	D.A.	IMPERVIOUS
FACILITY #3 BIORETENTION	3.46 AC.	2.16 ACRES

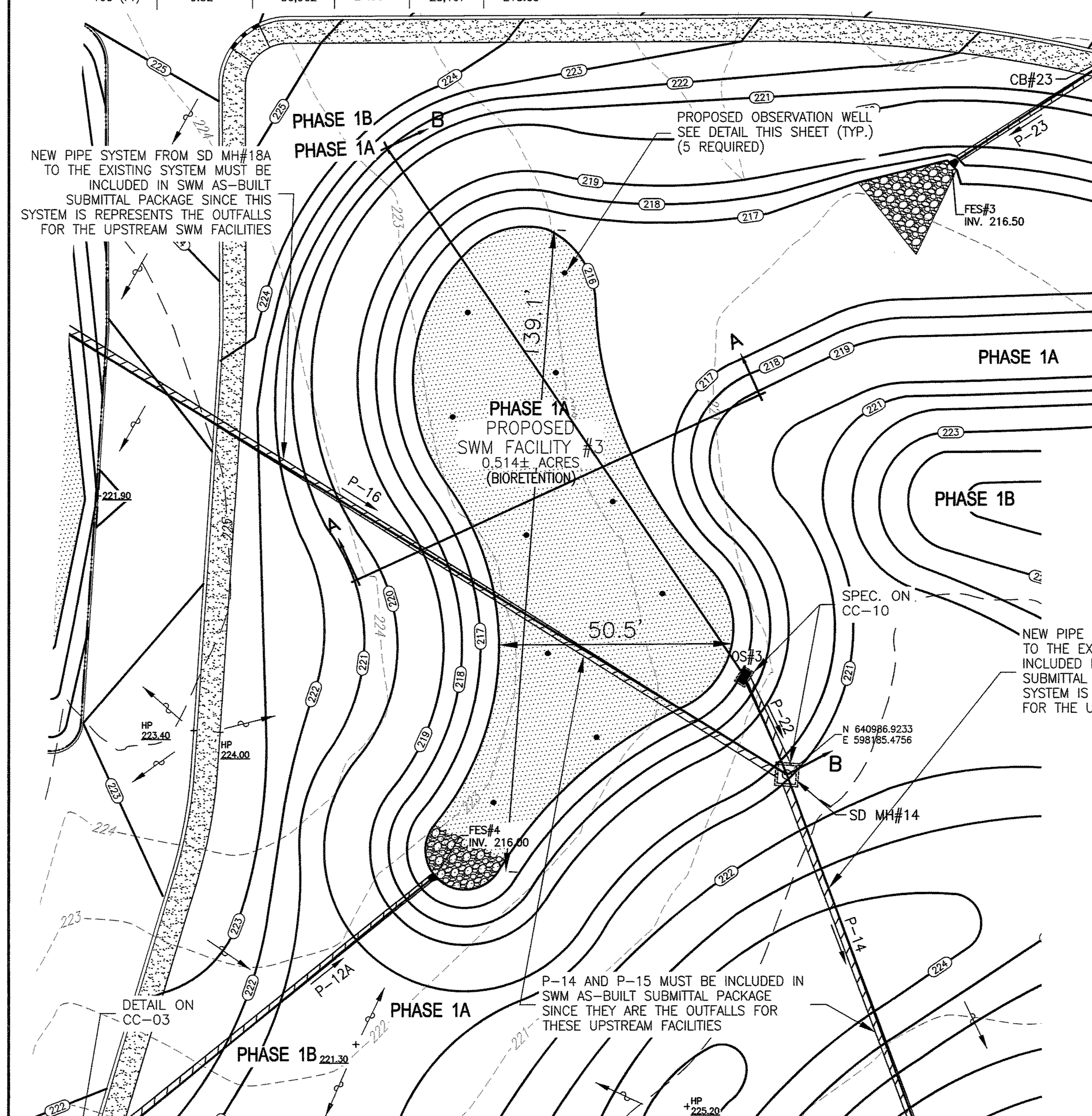

SWM FACILITY #3 (BIORETENTION)

SCALE: 1"=20'

FACILITY SPECIFIC OPERATION & MAINTENANCE GUIDELINES FOR INFILTRATION BASINS

FUNCTION: BIORETENTION FACILITIES REMOVE CONTAMINANTS FROM RUNOFF BY FILTERING THROUGH AN ENGINEERED MEDIA AND INFILTRATE WATER INTO THE GROUND.

INSPECTION: SEMI-ANNUAL (SPRING AND FALL) & AFTER STORM EVENTS OF 2 INCHES OR MORE.

TRASH AND DEBRIS: REMOVE TRASH AND DEBRIS ON A REGULAR BASIS. IT IS ESPECIALLY IMPORTANT TO REMOVE DEBRIS FROM ALL INLETS AND OUTFALL STRUCTURES.

SOIL: SOIL SHOULD BE TESTED ANNUALLY TO ENSURE PROPER PH AND FERTILITY INCLUDING: ORGANIC MATTER, MAGNESIUM (MG), PHOSPHORUS (P205), NITROGEN (N), POTASSIUM (K20), AND SOLUBLE SALTS. IF REQUIRED, FERTILIZER SHOULD ONLY BE APPLIED IN THE FALL.

EROSION: IF BARE SOIL EXISTS ON SIDE SLOPES, RESEED AND/OR REPLANT AS REQUIRED BASED UPON INSPECTION FINDINGS. STABILIZE APPLICABLE ERODED AREAS WITH ROLLED EROSION CONTROL PRODUCTS (RECP) OR TURF REINFORCING MATS (TRM), AS REQUIRED. IF RECP IS APPLIED, IT IS RECOMMENDED TO USE TRULY BIODEGRADABLE PRODUCTS TO AID IN MOWING MAINTENANCE AND TO PREVENT WILDLIFE ENTANGLEMENT. THESE PRODUCTS CAN BE RECOGNIZED AS HAVING A "BN" FOR BIONETTING OR "B" FOR BIODEGRADABLE.

MOWING: MOW AROUND FACILITY WEEKLY DURING PEAK GROWING SEASON (APRIL – NOVEMBER). MOW 10-FOOT WIDE ACCESS PATH TO ALL INLET AND OUTLET STRUCTURES, ALSO MOWING AROUND THESE STRUCTURES REGULARLY. USE MULCHING MOWER TO ENSURE THAT NUTRIENTS ARE RECYCLED. FOR WARM SEASON GRASSES, THE PREVIOUS SEASON'S STALKS SHOULD BE CUT DOWN TO 8-12 INCHES IN EARLY SPRING (MID MARCH), BEFORE NEW SEASON'S GROWTH EMERGES.

BUFFERS: NA

FENCING: NA

LANDSCAPE VEGETATION: MAINTAIN AS A LANDSCAPE ISLAND AND MANAGE VEGETATION ACCORDINGLY. CUT DOWN STANDING STALKS OF HERBACEOUS MATERIALS TO 12 INCHES JUST BEFORE GROWTH EMERGES IN SPRING (MID-MARCH). SELECTIVE APPLICATION OF HERBICIDES MAY REQUIRE A LICENSED PROFESSIONAL. RESEED OR REPLANT AS REQUIRED BASED UPON INSPECTION FINDINGS. INSPECT WOODY MATERIAL FOR PEST AND ICE DAMAGE. PRUNE TREES AND SHRUBS IN THE FALL. PLANTS ARE SPECIALLY SELECTED TO TOLERATE VARIABLE CONDITIONS SUCH AS SEVERE DROUGHT AND FLOODING, IN ADDITION TO SALTY CONDITIONS AS A RESULT OF ROAD SALT (WINTER CONDITIONS). REPLACE PLANTINGS AS NECESSARY.

MULCH: ADD DOUBLE OR TRIPLE-SHREDDED HARDWOOD MULCH, AS NEEDED, TO MAINTAIN A 3 INCH DEPTH FOR FACILITIES WITH MULCH TOP DRESSING.

SPECIAL CONSIDERATIONS: BIORETENTION FACILITIES ARE DESIGNED TO INFILTRATE WATER AND REMOVE POLLUTANTS FROM STORMWATER. DO NOT COMPACT FACILITY IN ANY WAY. THIS INCLUDES THE USE OF HEAVY EQUIPMENT OR MACHINERY. COMPACTION MAY LEAD TO SYSTEM FAILURE.

HIRE A PROFESSIONAL: IF FACILITY DOES NOT DRAIN WITHIN 48 HOURS; REMOVAL OF ACCUMULATED SEDIMENT IS NEEDED; REPLACEMENT OF BIOSOIL MIX (EVERY 15-20 YEARS); REPAIR OF SEVERE EROSION; VEGETATION CONTROL (CHEMICAL APPLICATION) IF LICENSING REQUIRED BY DE DEPARTMENT OF AGRICULTURE.

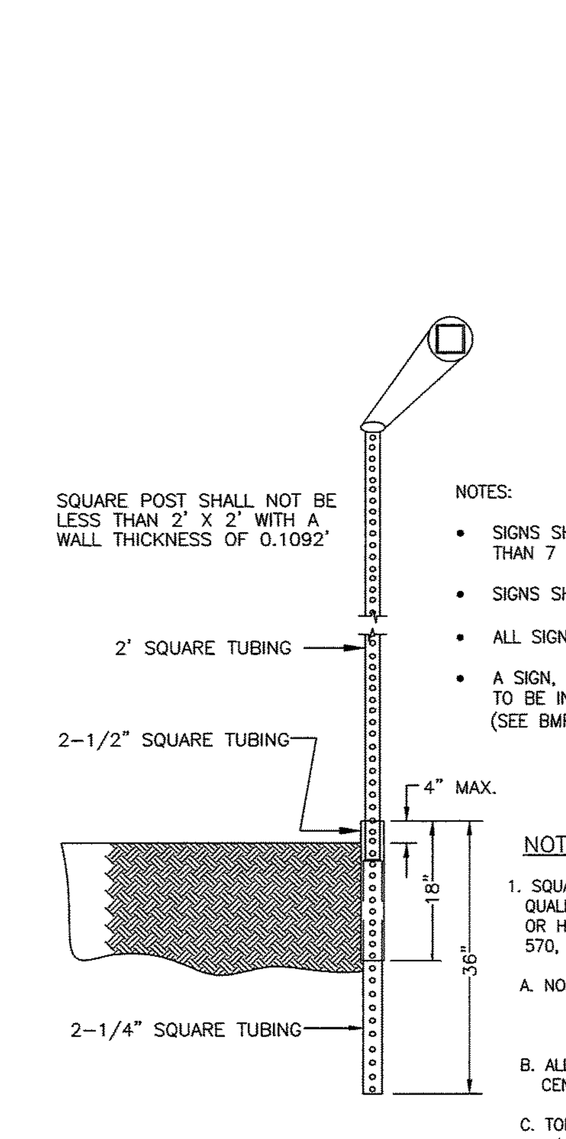

NOTES:

- SIGNS SHALL BE OF A VERTICAL HEIGHT OF AT LEAST 3 FEET, BUT NOT HIGHER THAN 7 FEET FROM GRADE IMMEDIATELY BELOW THE SIGN.
- SIGNS SHALL BE AT LEAST 12 INCHES WIDE BY 18 INCHES TALL.
- ALL SIGNS TO BE 0.080" THICK ALUMINUM.
- A SIGN, AS SHOWN ABOVE AND WITH VERBIAGE SHOWN FOR SPECIFIC BMP TYPE, IS TO BE INSTALLED ADJACENT TO EACH STORMWATER MANAGEMENT BMP FACILITY (SEE BMP PLAN FOR SIGN LOCATIONS)

BMP SIGN DETAIL

N.T.S.

NOTES

1. SQUARE TUBES TO BE FORMED FROM GALVANIZED SHEET STRUCTURAL (PHYSICAL) QUALITY, ASTM A 446, GRADE A, COATING DESIGNATION G 90, REGULAR SPANGLE, OR HOT ROLLED CARBON SHEET STEEL STRUCTURAL (PHYSICAL) QUALITY, ASTM A 570, GRADE 33.
   A. NOMINAL OUTSIDE DIMENSION (INCHES): 2 x 2 ± .008; 2 1/4 x 2 1/4 ± .010; 2 1/2 x 2 1/2 ± .010
   B. ALL FOUR SIDES ARE TO HAVE EVENLY SPACED 7/16" DIAMETER HOLES ON 1" CENTERS THE ENTIRE LENGTH OF THE TUBE.
   C. TOLERANCE ON HOLE SIZE IS ± 1/64". TOLERANCE ON HOLE SPACING IS ± 1/8" IN 20 FEET.
   D. STANDARD CORNER RADIUS SHALL BE 5/32" ± 1/64".
   E. THE FASTENERS TO BE SUPPLIED UNDER THE SPECIFICATION SHALL BE 5/16" GRADE 5 UNC CORNER BOLTS WITH CADMIUM OR ZINC PLATING, INSTALLATION OF SIGNS SHALL BE WITH 3/8" X 2 1/2" BOLT WITH LOCKNUT AND WASHER.

BREAK-AWAY SIGN POST ASSEMBLY DETAIL

N.T.S.

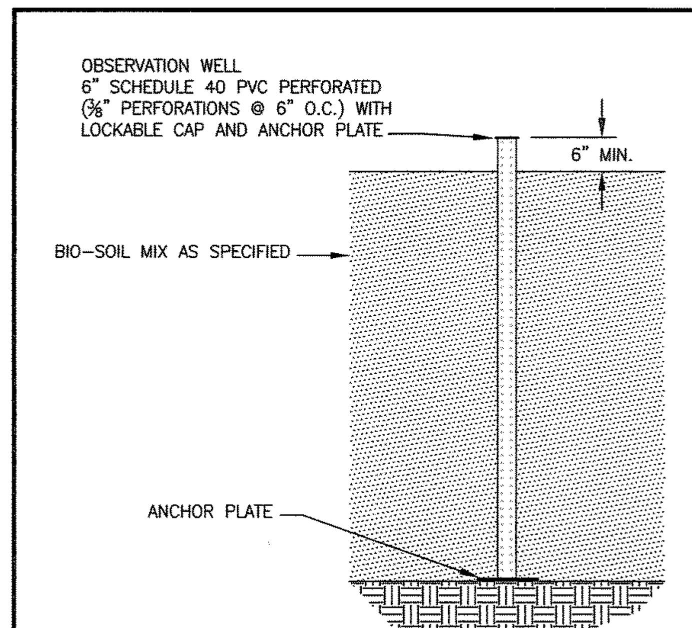

OBSERVATION WELL DETAIL

N.T.S.

BIO RETENTION FACILITY

INSPECTION: SEMI-ANNUAL INSPECTIONS (SPRING AND FALL) & AFTER STORM EVENTS OF 2 INCHES OR MORE

PLANT MATERIALS: CUT DOWN STANDING STALKS OF HERBACEOUS MATERIAL TO 12 INCHES JUST BEFORE GROWTH EMERGES IN SPRING (MID-MARCH)

SOIL: SOIL SHOULD BE TESTED ANNUALLY TO ENSURE PROPER PH AND FERTILITY.

IF REQUIRED, FERTILIZER SHOULD ONLY BE APPLIED IN THE FALL.

MULCH: AS NEEDED; ADD TRIPLE SHREDDED MULCH EVERY SPRING TO MAINTAIN 3 INCH DEPTH FOR FACILITIES WITH MULCH TOP-DRESSING.

CONTACT: NEW CASTLE COUNTY SPECIAL SERVICES (302) 395-5700

811

Know what's **below.** **Call** before you dig.

MISS UTILITY PHONE 1-800-282-8555 PROTECT YOURSELF, GIVE THREE WORKING DAYS NOTICE

SPECIFICATIONS FOR ALL STORM SEWER PIPES AND STRUCTURES PROVIDED ON GENERAL DEVELOPMENT PLAN SHEETS CC-08 THROUGH CC-11 EXCEPT AS OTHERWISE DETAILED ON STORMWATER DETAIL SHEETS CE-16 THROUGH CE-21 AND CC-03

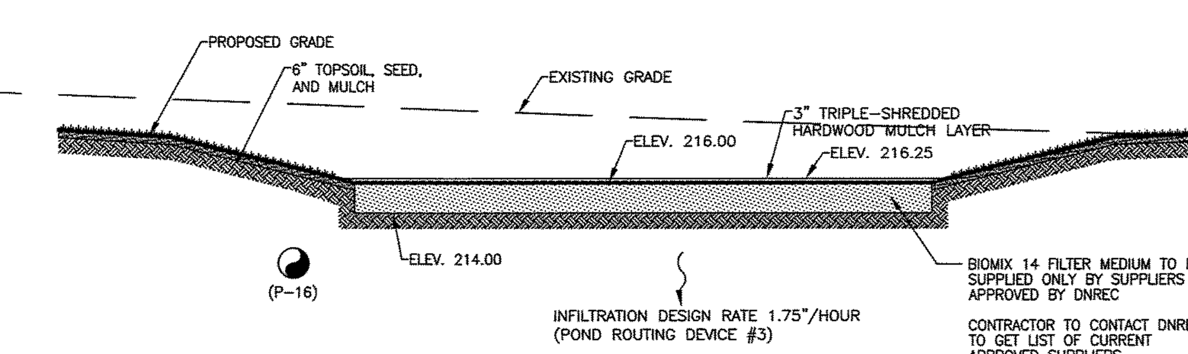

SECTION A-A

SCALE: 1" = 10'

ENGINEERING APPROVAL Jan 28, 2016 REVIEWED BY Michael Clendaniel

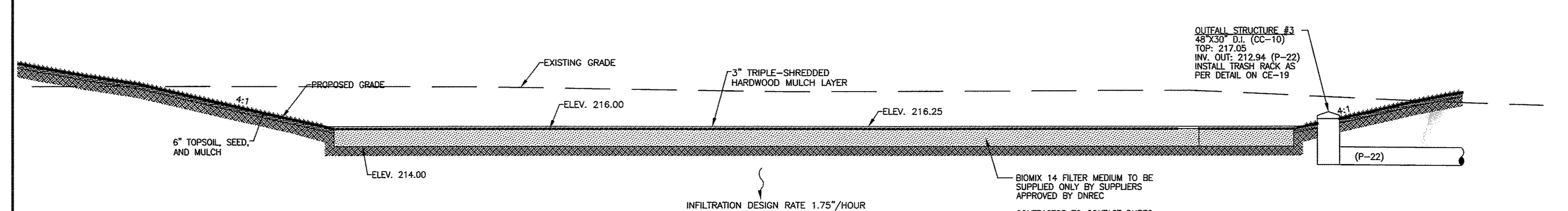

THE SEASONAL HIGH GROUNDWATER LEVEL RANGES FROM ELEVATION 195 TO 200. SEE PAGE 19 OF THE REPORT OF GEOTECHNICAL EXPLORATION (REVISED) PREPARED BY GEO-TECHNOLOGY ASSOCIATES, INC. DATED APRIL 2015.

SECTION B-B

SCALE: 1" = 10'

SWM FACILITY #3 (BIO-RETENTION) CROSS-SECTIONS

SCALE: AS NOTED

REVISIONS	CHECKED BY
1. REV. PER NCC REVIEW COMMENTS DATED 11-06-15	TCW 11-10-15
2. REV. PER NCC REVIEW COMMENTS DATED 1-19-16	TCW 1-19-16
3. ISSUED FOR CONSTRUCTION 1-27-2016	TCW 1-27-16

APPLICATION NO. 2015-0556-S(S)

POST-CONSTRUCTION STORMWATER MANAGEMENT PLAN-FACILITY #3 FOR

THE COMMONS AT LITTLE FALLS

SEDIMENT & STORMWATER MANAGEMENT PLANS

CHRISTIANA HUNDRED – NEW CASTLE COUNTY, DELAWARE

OWNER
CSC SPECTRUM LITTLE FALLS, LLC & NWC-SPE LLC
C/O TREFOIL PROPERTIES LP
1690 SUMNEYTOWN PIKE, SUITE 240
LANSDALE, PA 19446
(215) 855-5100

NEW CASTLE, DE (302) 323-9377
DOVER, DE (302) 734-9597
HAVRE DE GRACE, MD (410) 939-2144

Landmark Science & Engineering
100 WEST COMMONS BOULEVARD, SUITE 301
NEW CASTLE, DELAWARE 19720
PHONE - (302) 323-9377 • FAX - (302) 323-9461
INFO@LANDMARK-SE.COM • WWW.LANDMARK-SE.COM

THIS DRAWING AND THE DESIGN SHOWN ARE THE EXCLUSIVE PROPERTY OF LANDMARK SCIENCE AND ENGINEERING AND SHALL NOT BE ALTERED OR COPIED WITHOUT WRITTEN PERMISSION.

THIS DRAWING DOES NOT INCLUDE NECESSARY COMPONENTS FOR CONSTRUCTION SAFETY.

ALL CONSTRUCTION MUST BE DONE IN COMPLIANCE WITH THE OCCUPATIONAL SAFETY AND HEALTH ACT OF 1970 AND THE RULES AND REGULATIONS THERETO APPURTENANT

DRAWN BY: ALL	SCALE: AS NOTED		
DESIGNED BY: MKB	DATE: 8/26/15		
CHECKED BY: TCW	LAST MODIFIED 1/27/16		
COMM. NO. C1115-15	FILE NO.: XXX		
DRAWING NAME: SWM DETAILS.DWG			
CE-18	SHEET NO. CE-18 of 21		

© 2016 LANDMARK SCIENCE & ENGINEERING

BIORETENTION AREA SEQUENCE OF CONSTRUCTION

A. CONTRACTOR SHALL INSTALL ORANGE SAFETY FENCING AROUND EACH FACILITY LOCATION.

B. CONTRACTOR SHALL CONTACT THE CCR AT LEAST 3 WORKING DAYS BEFORE CONSTRUCTION OF THE BASIN COMMENCES SO THE CCR CAN BE ON-SITE. SEE CCR RESPONSIBILITIES IN GENERAL E&S CONTROL PLAN NOTES.

C. CONSTRUCTION OF THE BIORETENTION FACILITY MAY ONLY BEGIN AFTER THE ENTIRE CONTRIBUTING DRAINAGE AREA HAS BEEN STABILIZED WITH VEGETATION. IT MAY BE NECESSARY TO BLOCK CERTAIN CURB OR OTHER INLETS WHILE THE BIORETENTION AREA IS BEING CONSTRUCTED. THE PROPOSED SITE SHOULD BE CHECKED FOR EXISTING UTILITIES PRIOR TO ANY EXCAVATION.

D. TEMPORARY EROSION AND SEDIMENT CONTROLS (E.G., DIVERSION DIKES, REINFORCED SILT FENCE) ARE NEEDED DURING CONSTRUCTION OF THE BIORETENTION FACILITY TO DIVERT STORMWATER AWAY FROM THE BIORETENTION FACILITY UNTIL IT IS COMPLETED. SPECIAL PROTECTION MEASURES SUCH AS EROSION CONTROL FABRICS MAY BE NEEDED TO PROTECT VULNERABLE SIDE SLOPES FROM EROSION DURING THE CONSTRUCTION PROCESS.

E. ANY PRE-TREATMENT CELLS SHOULD BE EXCAVATED FIRST.

F. EXCAVATE THE INFILTRATION PRACTICE TO THE DESIGN DIMENSIONS FROM THE SIDE, USING A BACKHOE OR EXCAVATOR. NO HEAVY EQUIPMENT IS PERMITTED WITHIN THE FACILITY AREA. EXCAVATING EQUIPMENT SHOULD HAVE ADEQUATE REACH SO THEY DO NOT HAVE TO SIT INSIDE THE FOOTPRINT OF THE BIORETENTION FACILITY. CONTRACTORS ARE TO USE A CELL CONSTRUCTION APPROACH IN LARGER BIORETENTION BASINS, WHEREBY THE BASIN IS SPLIT INTO 500 TO 1,000 SQ. FT. TEMPORARY CELLS WITH A 10-15 FOOT EARTH BRIDGE IN BETWEEN, SO THAT CELLS CAN BE EXCAVATED FROM THE SIDE.

G. IT MAY BE NECESSARY TO RIP OR TILL THE BOTTOM SOILS TO A DEPTH OF 6 TO 12 INCHES TO PROMOTE GREATER INFILTRATION IF A BUCKET WITHOUT TEETH IS USED FOR EXCAVATION.

H. HAVE GEOTECHNICAL ENGINEER EVALUATE THE SUBGRADE BEFORE PROCEEDING.

I. ANCHOR THE OBSERVATION WELL(S), AND ADD STONE IN ACCORDANCE WITH NEXT STEP.

L. IF A STONE STORAGE LAYER IS PROPOSED FOR AN UNDERDRAIN DESIGN, PLACE THE APPROPRIATE DEPTH OF RICE GRAVEL ON THE BOTTOM, INSTALL THE PERFORATED UNDERDRAIN PIPE, PACK RICE GRAVEL TO 3 INCHES ABOVE THE UNDERDRAIN PIPE. A STONE LAYER MAY ALSO BE NECESSARY FOR AN INFILTRATING DESIGN IF THE 24" OF BIOSOIL MEDIA DOES NOT REACH A PERMEABLE LAYER IN THE SOIL PROFILE.

M. THE BIOSOIL MEDIA MUST COME FROM AN APPROVED SUPPLIER. IF NOT USED UPON DELIVERY, STORE IT ON AN ADJACENT IMPERVIOUS AREA OR PLASTIC SHEETING. APPLY THE MEDIA IN 12-INCH LIFTS UNTIL THE DESIRED TOP ELEVATION OF THE BIORETENTION FACILITY IS ACHIEVED. WAIT A FEW DAYS TO CHECK FOR SETTLEMENT, AND ADD ADDITIONAL MEDIA, AS NEEDED, TO ACHIEVE THE DESIGN ELEVATION. SPRINKLING WITH WATER BETWEEN LIFTS MAY REDUCE THE AMOUNT OF SETTLING THAT OCCURS.

N. PREPARE PLANTING HOLES FOR ANY SHRUBS AND PLANTS AS SHOWN ON THE APPROVED LANDSCAPE PLAN, INSTALL THE VEGETATION, AND WATER ACCORDINGLY. INSTALL ANY TEMPORARY IRRIGATION.

O. USE SOD, WHERE APPLICABLE TO ESTABLISH A DENSE TURF COVER FOR AT LEAST 10 FEET AROUND THE SIDES OF THE FACILITY, TO REDUCE EROSION AND SLOUGHING.

P. PLACE THE SURFACE COVER IN BOTH CELLS (MULCH, RIVER ROCK, ETC.), DEPENDING ON THE DESIGN DETAILS. IF STABILIZATION MATTING WILL BE USED IN AREAS THAT WILL BE PLANTED, THE MATTING WILL NEED TO BE INSTALLED PRIOR TO PLANTING, AND HOLES OR SLITS WILL HAVE TO BE CUT IN THE MATTING TO INSTALL THE PLANTS.

Q. INSTALL THE PLANT MATERIALS AS SHOWN IN THE APPROVED LANDSCAPE PLAN, AND WATER THEM AT THE END OF EACH DAY DURING WEEKS OF NO RAIN FOR THE FIRST TWO MONTHS.

R. IF CURB CUTS OR INLETS WERE BLOCKED DURING BIORETENTION INSTALLATION, UNBLOCK THESE AFTER THE DRAINAGE AREA AND SIDE SLOPES HAVE GOOD VEGETATIVE COVER. IT IS RECOMMENDED THAT UNBLOCKING CURB CUTS AND INLETS TAKE PLACE AFTER TWO TO THREE STORM EVENTS IF THE DRAINAGE AREA INCLUDES NEWLY INSTALLED ASPHALT, SINCE NEW ASPHALT TENDS TO PRODUCE A LOT OF FINES AND GRIT DURING THE FIRST SEVERAL STORMS.

S. AN AS-BUILT SURVEY MUST BE PERFORMED AND THE REQUIRED STORMWATER FACILITY POST-CONSTRUCTION VERIFICATION SUBMISSION SHALL BE SUBMITTED TO NEW CASTLE COUNTY AFTER FINAL COMPLETION OF THE FACILITY FOR APPROVAL PRIOR TO ISSUANCE OF A CERTIFICATE OF OCCUPANCY.

GENERAL OPERATION & MAINTENANCE GUIDELINES

THE BIORETENTION AREA SHALL BE MAINTAINED BY THE PROPERTY OWNER OR ASSIGNS OF THE PROPERTY. REQUIRED MAINTENANCE FOR THESE FACILITIES INCLUDES INSPECTION AND REPAIR OR REPLACEMENT OF THE TREATMENT AREA COMPONENTS.

1. THE DNREC SEDIMENT AND STORMWATER PROGRAM AND/OR THE RELEVANT DELEGATED AGENCY RESERVES THE RIGHT TO ENTER PRIVATE PROPERTY FOR PURPOSES OF PERIODIC SITE REVIEWS.
2. NEW CASTLE COUNTY DEPARTMENT OF LAND USE ENGINEERING SECTION SHALL BE NOTIFIED WITHIN 30 BUSINESS DAYS IF THE PROPERTY OWNERSHIP IS TRANSFERRED TO A NEW PERSON OR ENTITY.
3. THE DNREC SEDIMENT AND STORMWATER PROGRAM AND/OR THE RELEVANT DELEGATED AGENCY MAY SEEK ENFORCEMENT ACTION AGAINST ANY OWNER DEEMED NEGLIGENT IN FULFILLING THE OPERATION AND MAINTENANCE REQUIREMENTS OF THE DELAWARE SEDIMENT AND STORMWATER REGULATIONS.
4. NEW CASTLE COUNTY DEPARTMENT OF LAND USE ENGINEERING SECTION SHALL BE CONTACTED IF A CONCERN ARISES REGARDING A STORMWATER MANAGEMENT FACILITY, BEFORE ANY NON-ROUTINE MAINTENANCE, OR IF MODIFICATIONS TO THE FACILITY ARE DESIRED.
5. ANY DESIGN MODIFICATIONS MADE TO THE STORMWATER SYSTEM SHALL REQUIRE THE CREATION OF A NEW POST-CONSTRUCTION STORMWATER MANAGEMENT PLAN AND/OR OPERATIONS AND MAINTENANCE PLAN, WITH APPROVAL OF THE PLAN(S) BY NEW CASTLE COUNTY DEPARTMENT OF LAND USE ENGINEERING SECTION.
6. FOR ALL STORMWATER EASEMENT AREAS (i.e. ACCESS, MAINTENANCE, OR OFF-SITE) AND THE MINIMUM 10-FOOT WIDE ACCESSWAYS TO ALL STORMWATER FACILITIES AND THEIR STRUCTURAL COMPONENTS, REGULAR MOWING SHALL BE PERFORMED TO KEEP THE GRASS 6" OR LESS; NO TREES OR SHRUBS SHALL BE PLANTED, AND ANY FOUND GROWING SHALL BE REMOVED; AND NO PERMANENT STRUCTURES, SUCH AS FENCES OR SHEDS, SHALL BE LOCATED WITHIN THE EASEMENT OR ACCESSWAY.
7. TREES SHALL NOT BE PLANTED, AND SHALL BE REMOVED IF FOUND GROWING, ON AND WITHIN 15 FEET OF ALL POND EMBANKMENTS, ON POND SLOPES OR SAFETY BENCHES, AND WITHIN 10 FEET OF STRUCTURAL COMPONENTS, SUCH AS PIPE INLETS.
8. WHEN THE FACILITY IS EXCAVATED TO REMOVE ACCUMULATED SEDIMENT, THE DISPOSAL AREA SHALL BE PERMANENTLY STABILIZED SO THAT IT DOES NOT RE-CREATE AN EROSION PROBLEM. ANY MATERIAL TAKEN OFF-SITE SHALL STILL BE UTILIZED OR DISPOSED OF IN AN APPROVED DNREC MANNER.
9. BEFORE ANY EARTHWORK OR EXCAVATION TAKES PLACE, THE CONTRACTOR SHALL CALL MISS UTILITY AT 811 OR 1-800-282-8555 AT LEAST 48 HOURS PRIOR TO CONSTRUCTION TO HAVE ALL EXISTING UTILITIES MARKED ON SITE.

TYPICAL MAINTENANCE ACTIVITIES FOR BIORETENTION AREAS

MAINTENANCE ACTIVITY	SCHEDULE
• INSPECT THE SITE AFTER STORM EVENT THAT EXCEEDS 0.5 INCHES OF RAINFALL • STABILIZE ANY BARE OR ERODING AREAS IN THE CONTRIBUTING DRAINAGE AREA DURING INCLUDING THE BIORETENTION PERIMETER AREA ESTABLISHMENT. • WATER TREES AND SHRUBS PLANTED IN THE BIORETENTION PLANTING BED DURING THE FIRST GROWING SEASON. IN GENERAL, WATER EVERY 3 DAYS FOR FIRST MONTH, AND THEN WEEKLY DURING THE REMAINDER OF THE FIRST GROWING SEASON (APRIL – OCTOBER), DEPENDING ON RAINFALL.	AS NEEDED (FIRST YEAR)
• REMOVE DEBRIS AND BLOCKAGES • REPAIR UNDERCUT, ERODED, AND BARE SOIL AREAS TWICE A YEAR • MOWING OF THE BIORETENTION VEGETATED PERIMETER AREA AND BANKS (AS DIRECTED IN APPROVED O&M PLAN)	QUARTERLY OR AFTER MAJOR STORMS (>1 INCH RAINFALL)
• CLEANUP TO REMOVE TRASH, DEBRIS AND FLOATABLES • A FULL MAINTENANCE REVIEW • CHECK CONDITION OF OUTLET STRUCTURE • REPAIR BROKEN MECHANICAL COMPONENTS, IF NEEDED	TWICE A YEAR
• BIORETENTION PLANTING BED REPLACEMENT/REINFORCEMENT PLANTINGS	ONE TIME-DURING THE 2ND YEAR FOLLOWING CONSTRUCTION
• FOREBAY SEDIMENT REMOVAL (AS APPLICABLE) • FLUSH UNDERDRAIN SYSTEM (AS APPLICABLE)	EVERY 5 TO 7 YEARS
• REPAIR PIPES, OUTLET STRUCTURE AND SPILLWAY, AS NEEDED • REMOVE ANY ACCUMULATED SEDIMENT WITHIN FACILITY, AS NEEDED	FROM 5 TO 25 YEARS

P:\C1115-15 THE COMMONS AT LITTLE FALLS PARKING GARAGE\DWG\CNST\S & S\POST-CNST\SWM DETAILS.DWG

FACILITY #8 (BIORETENTION AREA) HYDRAULIC DATA

STORM FREQ. (YRS.)	EXFILTRATION Q (CFS)	EXFILTRATION VOLUME (CU. FT.)	OUTFLOW Q (CFS)	OUTFLOW VOLUME (CU. FT.)	W.S. EL. (FT.)
1 (RPv)	0.18	6,439	0.00	0	206.85
10 (Cv)	0.20	10,254	3.20	3,803	207.23
100 (Fv)	0.22	13,538	10.20	12,314	207.58

FACILITY I.D.	D.A.	IMPERVIOUS
FACILITY #8 BIORETENTION	1.45 AC.	0.77 ACRES

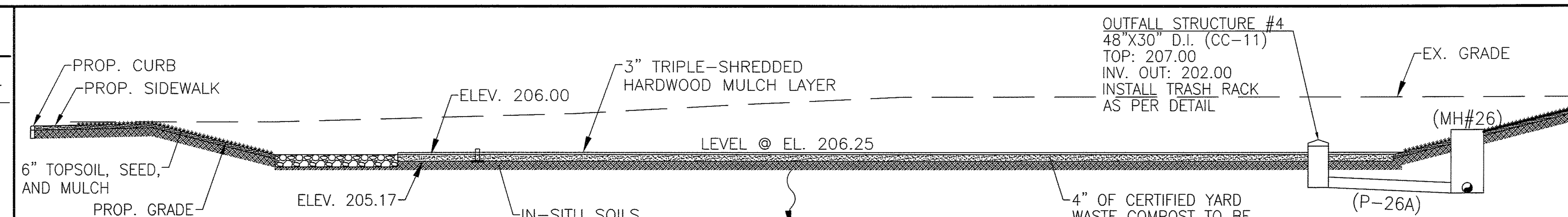

SECTION A-A
SCALE: 1" = 10'

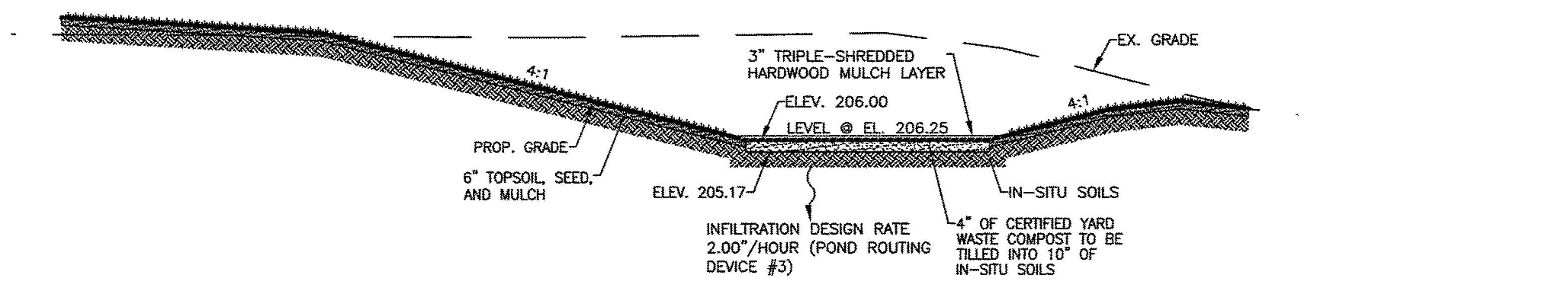

SECTION B-B
SCALE: 1" = 10'

SWM FACILITY #8 (BIO-RETENTION) CROSS-SECTIONS

SCALE: AS NOTED

ENGINEERING
APPROVAL
Jan 28, 2016
REVIEWED BY
Michael Clendaniel

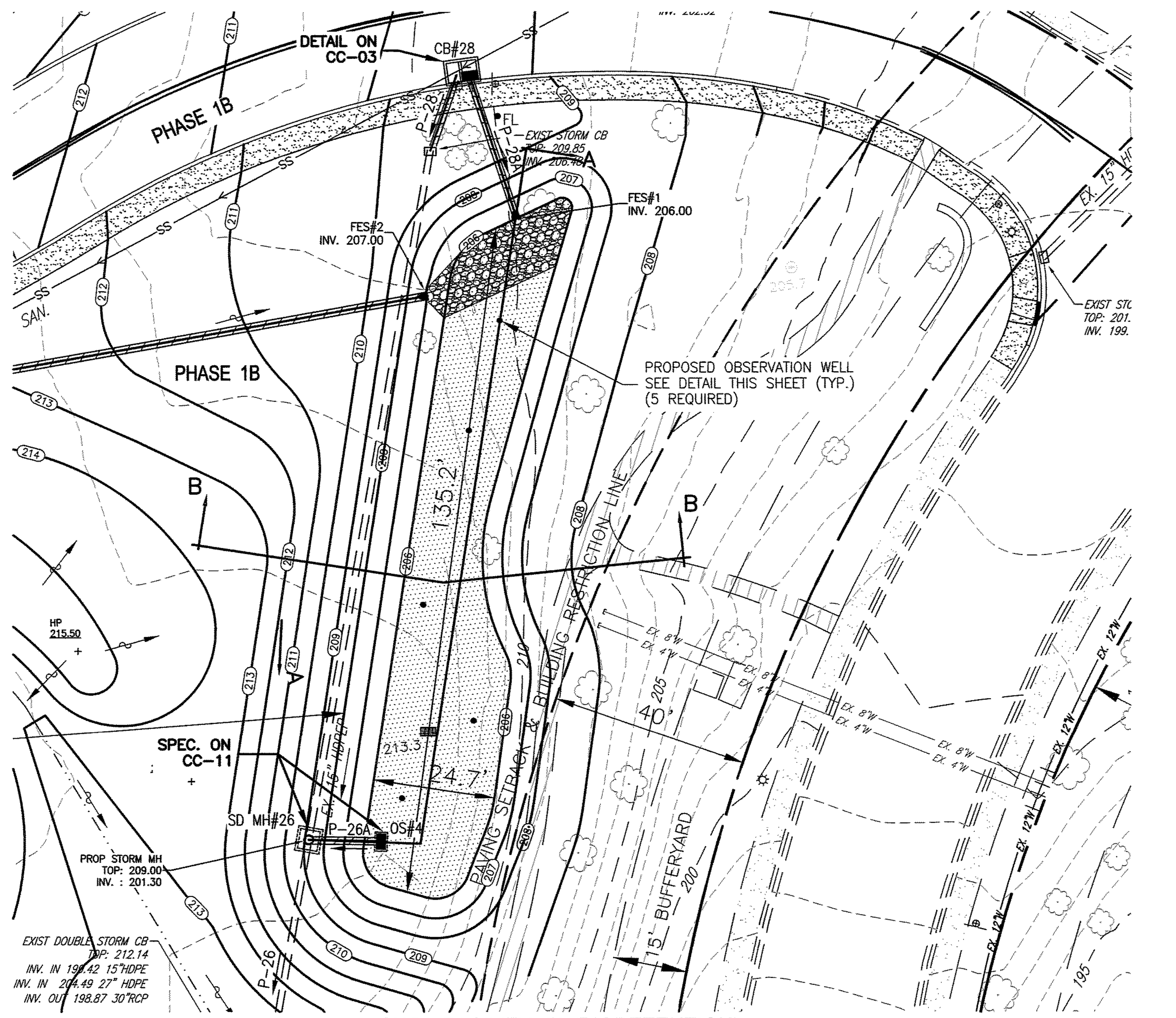

SWM FACILITY #8 (BIORETENTION)

SCALE: 1"=20'

THE SEASONAL HIGH GROUNDWATER LEVEL RANGES FROM ELEVATION 195 TO 200. SEE PAGE 19 OF THE REPORT OF GEOTECHNICAL EXPLORATION (REVISED) PREPARED BY GEO-TECHNOLOGY ASSOCIATES, INC. DATED APRIL 2015.

FACILITY SPECIFIC OPERATION & MAINTENANCE GUIDELINES FOR INFILTRATION BASINS

FUNCTION:	BIORETENTION FACILITIES REMOVE CONTAMINANTS FROM RUNOFF BY FILTERING THROUGH AN ENGINEERED MEDIA AND INFILTRATE WATER INTO THE GROUND.
INSPECTION:	SEMI-ANNUAL (SPRING AND FALL) & AFTER STORM EVENTS OF 2 INCHES OR MORE.
TRASH AND DEBRIS:	REMOVE TRASH AND DEBRIS ON A REGULAR BASIS. IT IS ESPECIALLY IMPORTANT TO REMOVE DEBRIS FROM ALL INLETS AND OUTFALL STRUCTURES.
SOIL:	SOIL SHOULD BE TESTED ANNUALLY TO ENSURE PROPER PH AND FERTILITY INCLUDING: ORGANIC MATTER, MAGNESIUM (MG), PHOSPHORUS (P205), NITROGEN (N), POTASSIUM (K20), AND SOLUBLE SALTS. IF REQUIRED, FERTILIZER SHOULD ONLY BE APPLIED IN THE FALL.
EROSION:	IF BARE SOIL EXISTS ON SIDE SLOPES, RESEED AND/OR REPLANT AS REQUIRED BASED UPON INSPECTION FINDINGS. STABILIZE APPLICABLE ERODED AREAS WITH ROLLED EROSION CONTROL PRODUCTS (RECP) OR TURF REINFORCING MATS (TRM), AS REQUIRED. IF RECP IS APPLIED, IT IS RECOMMENDED TO USE TRULY BIODEGRADABLE PRODUCTS TO AID IN MOWING MAINTENANCE AND TO PREVENT WILDLIFE ENTANGLEMENT. THESE PRODUCTS CAN BE RECOGNIZED AS HAVING A "BN" FOR BIONETTING OR "B" FOR BIODEGRADABLE.
MOWING:	MOW AROUND FACILITY WEEKLY DURING PEAK GROWING SEASON (APRIL – NOVEMBER). MOW 10-FOOT WIDE ACCESS PATH TO ALL INLET AND OUTLET STRUCTURES, ALSO MOWING AROUND THESE STRUCTURES REGULARLY. USE MULCHING MOWER TO ENSURE THAT NUTRIENTS ARE RECYCLED. FOR WARM SEASON GRASSES, THE PREVIOUS SEASON'S STALKS SHOULD BE CUT DOWN TO 8-12 INCHES IN EARLY SPRING (MID MARCH), BEFORE NEW SEASON'S GROWTH EMERGES.
BUFFERS: NA	
FENCING: NA	
LANDSCAPE VEGETATION:	MAINTAIN AS A LANDSCAPE ISLAND AND MANAGE VEGETATION ACCORDINGLY. CUT DOWN STANDING STALKS OF HERBACEOUS MATERIALS TO 12 INCHES JUST BEFORE GROWTH EMERGES IN SPRING (MID-MARCH). SELECTIVE APPLICATION OF HERBICIDES MAY REQUIRE A LICENSED PROFESSIONAL. RESEED OR REPLANT AS REQUIRED BASED UPON INSPECTION FINDINGS. INSPECT WOODY MATERIAL FOR PEST AND ICE DAMAGE. PRUNE TREES AND SHRUBS IN THE FALL. PLANTS ARE SPECIALLY SELECTED TO TOLERATE VARIABLE CONDITIONS SUCH AS SEVERE DROUGHT AND FLOODING, IN ADDITION TO SALTY CONDITIONS AS A RESULT OF ROAD SALT (WINTER CONDITIONS). REPLACE PLANTINGS AS NECESSARY.
MULCH:	ADD DOUBLE OR TRIPLE-SHREDDED HARDWOOD MULCH, AS NEEDED, TO MAINTAIN A 3 INCH DEPTH FOR FACILITIES WITH MULCH TOP DRESSING.
SPECIAL CONSIDERATIONS:	BIORETENTION FACILITIES ARE DESIGNED TO INFILTRATE WATER AND REMOVE POLLUTANTS FROM STORMWATER. DO NOT COMPACT FACILITY IN ANY WAY. THIS INCLUDES THE USE OF HEAVY EQUIPMENT OR MACHINERY. COMPACTION MAY LEAD TO SYSTEM FAILURE.
HIRE A PROFESSIONAL:	IF FACILITY DOES NOT DRAIN WITHIN 48 HOURS; REMOVAL OF ACCUMULATED SEDIMENT IS NEEDED; REPLACEMENT OF BIOSOIL MIX (EVERY 15-20 YEARS); REPAIR OF SEVERE EROSION; VEGETATION CONTROL (CHEMICAL APPLICATION) IF LICENSING REQUIRED BY DE DEPARTMENT OF AGRICULTURE.

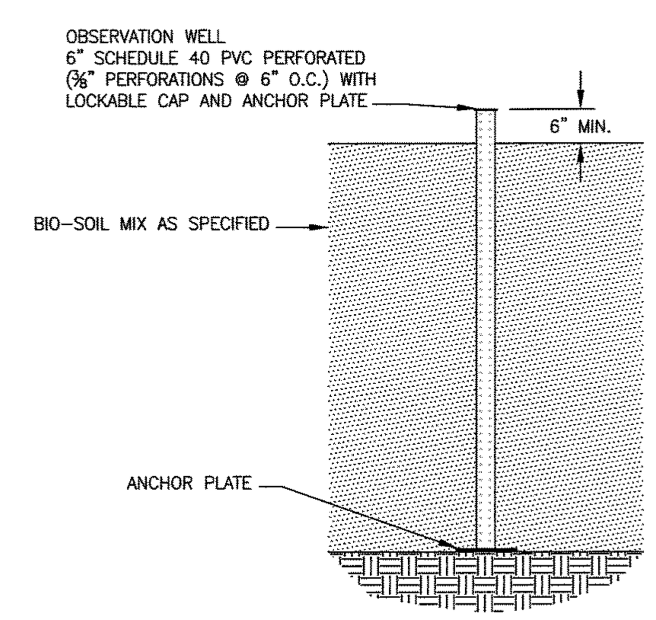

OBSERVATION WELL DETAIL

N.T.S.

811
Know what's **below.**
Call before you dig.

MISS UTILITY PHONE 1-800-282-8555
PROTECT YOURSELF, GIVE THREE WORKING DAYS NOTICE

BIO RETENTION FACILITY

INSPECTION: SEMI-ANNUAL INSPECTIONS (SPRING AND FALL) & AFTER STORM EVENTS OF 2 INCHES OR MORE

PLANT MATERIALS: CUT DOWN STANDING STALKS OF HERBACEOUS MATERIAL TO 12 INCHES JUST BEFORE GROWTH EMERGES IN SPRING (MID-MARCH)

SOIL: SOIL SHOULD BE TESTED ANNUALLY TO ENSURE PROPER PH AND FERTILITY.

IF REQUIRED, FERTILIZER SHOULD ONLY BE APPLIED IN THE FALL.

MULCH: AS NEEDED; ADD TRIPLE SHREDDED MULCH EVERY SPRING TO MAINTAIN 3 INCH DEPTH FOR FACILITIES WITH MULCH TOP-DRESSING.

CONTACT: NEW CASTLE COUNTY SPECIAL SERVICES (302) 395-5700

BMP SIGN DETAIL
N.T.S.

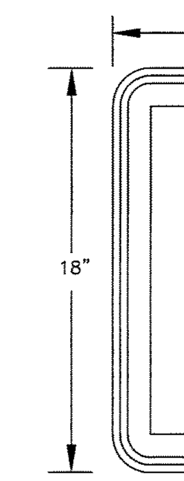

NOTES:

- SIGNS SHALL BE OF A VERTICAL HEIGHT OF AT LEAST 3 FEET, BUT NOT HIGHER THAN 7 FEET FROM GRADE IMMEDIATELY BELOW THE SIGN.
- SIGNS SHALL BE AT LEAST 12 INCHES WIDE BY 18 INCHES TALL.
- ALL SIGNS TO BE 0.080" THICK ALUMINUM.
- A SIGN, AS SHOWN ABOVE AND WITH VERBIAGE SHOWN FOR SPECIFIC BMP TYPE, IS TO BE INSTALLED ADJACENT TO EACH STORMWATER MANAGEMENT BMP FACILITY (SEE BMP PLAN FOR SIGN LOCATIONS)

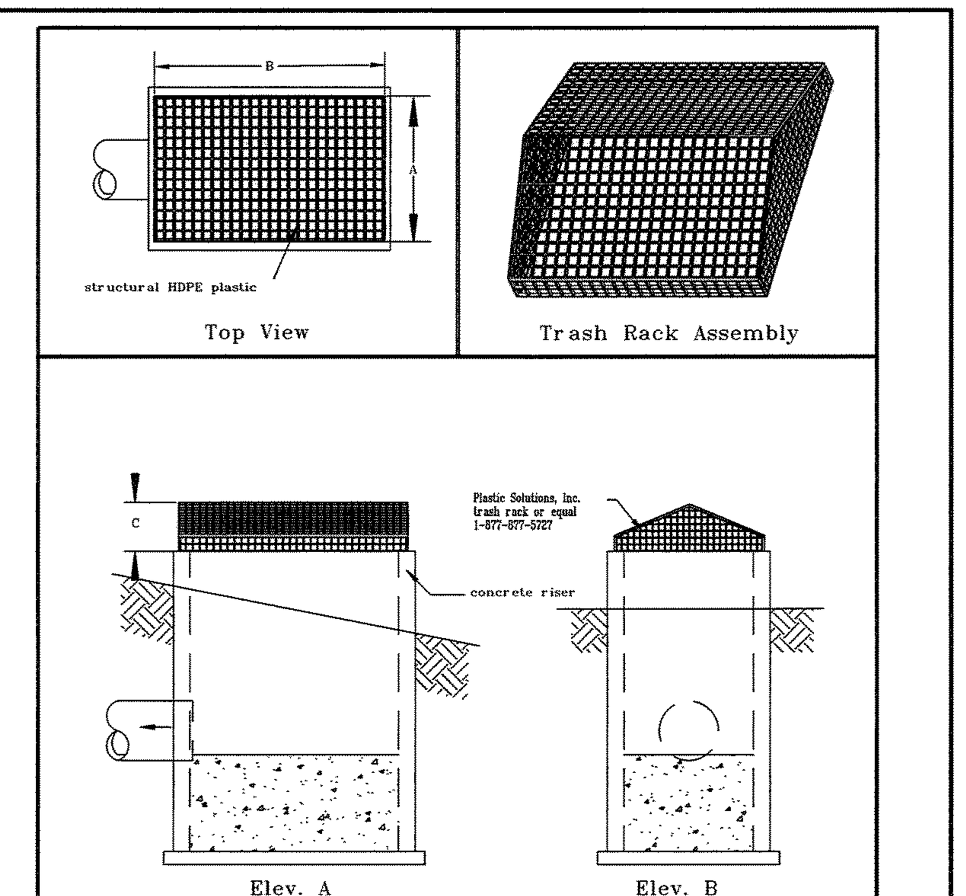

BMP SIGN DETAIL
N.T.S.

PEAK ROOF TRASH RACK

PLASTIC SOLUTIONS INC.
P.O. Box 4386
Winchester VA 22604
877-877-5727
www.plastic-solution.com

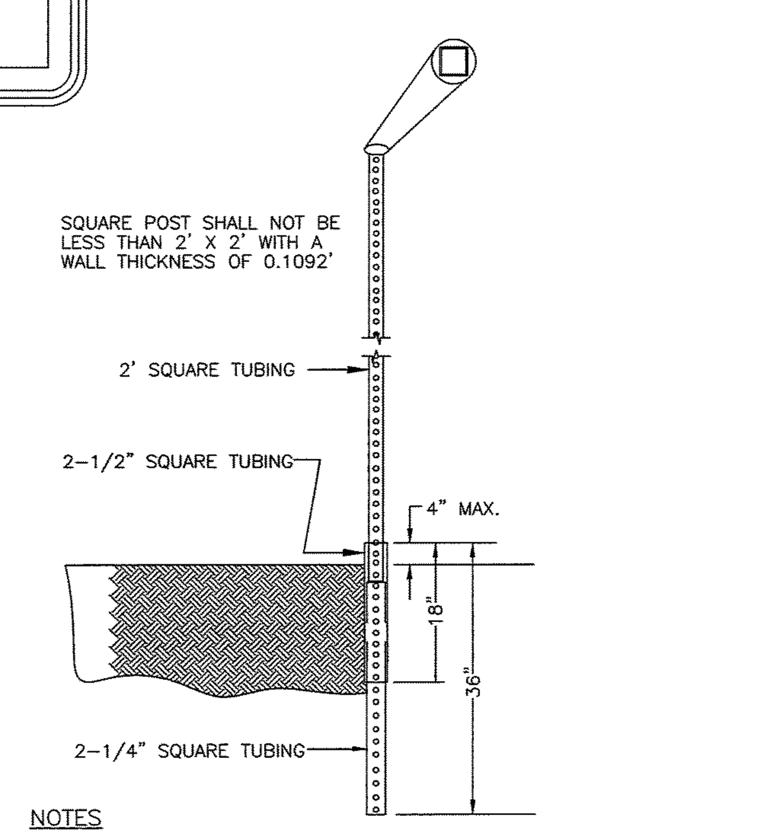

NOTES

1. SQUARE TUBES TO BE FORMED FROM GALVANIZED SHEET STRUCTURAL (PHYSICAL) QUALITY, ASTM A 446, GRADE A, COATING DESIGNATION G 90, REGULAR SPANGLE, OR HOT ROLLED CARBON SHEET STEEL STRUCTURAL (PHYSICAL) QUALITY, ASTM A 570, GRADE 33.

   A. NOMINAL OUTSIDE DIMENSION (INCHES): 2 x 2 ± .008
   2 1/4 x 2 1/4 ± .010
   2 1/2 x 2 1/2 ± .010

   B. ALL FOUR SIDES ARE TO HAVE EVENLY SPACED 7/16" DIAMETER HOLES ON 1" CENTERS THE ENTIRE LENGTH OF THE TUBE.

   C. TOLERANCE ON HOLE SIZE IS ± 1/64". TOLERANCE ON HOLE SPACING IS ± 1/8" IN 20 FEET.

   D. STANDARD CORNER RADIUS SHALL BE 5/32" ± 1/64".

   E. THE FASTENERS TO BE SUPPLIED UNDER THE SPECIFICATION SHALL BE 5/16" GRADE 5 UNC CORNER BOLTS WITH CADMIUM OR ZINC PLATING, INSTALLATION OF SIGNS SHALL BE WITH 3/8" X 2 1/2" BOLT WITH LOCKNUT AND WASHER.

BREAK-AWAY SIGN POST ASSEMBLY DETAIL

N.T.S.

SPECIFICATIONS FOR ALL STORM SEWER PIPES AND STRUCTURES PROVIDED ON GENERAL DEVELOPMENT PLAN SHEETS CC-08 THROUGH CC-11 EXCEPT AS OTHERWISE DETAILED ON STORMWATER DETAIL SHEETS CE-16 THROUGH CE-21 AND CC-03

TED C. WILLIAMS LICENSE No. 8481 DELAWARE PROFESSIONAL

REVISIONS	CHECKED BY
1. REV. PER NCC REVIEW COMMENTS DATED 11-06-15	TCW 11-10-15
2. REV. PER NCC REVIEW COMMENTS DATED 1-19-16	TCW 1-19-16
3. ISSUED FOR CONSTRUCTION 1-27-2016	TCW 1-27-16

APPLICATION NO. 2015-0556-S
POST-CONSTRUCTION STORMWATER MANAGEMENT PLAN-FACILITY #8
FOR
THE COMMONS AT LITTLE FALLS
SEDIMENT & STORMWATER MANAGEMENT PLANS
CHRISTIANA HUNDRED – NEW CASTLE COUNTY, DELAWARE

OWNER
CSC SPECTRUM LITTLE FALLS, LLC & NWC-SPE LLC
C/O TREFOIL PROPERTIES LP
1690 SUMNEYTOWN PIKE, SUITE 240
LANSDALE, PA 19446
(215) 855-5100

NEW CASTLE, DE (302) 323-9377
DOVER, DE (302) 734-9597
HAVRE DE GRACE, MD (410) 939-2144

Landmark Science & Engineering
100 WEST COMMONS BOULEVARD, SUITE 301
NEW CASTLE, DELAWARE 19720
PHONE - (302) 323-9377 • FAX - (302) 323-9461
INFO@LANDMARK-SE.COM • WWW.LANDMARK-SE.COM

THIS DRAWING AND THE DESIGN SHOWN ARE THE EXCLUSIVE PROPERTY OF LANDMARK SCIENCE AND ENGINEERING AND SHALL NOT BE ALTERED OR COPIED WITHOUT WRITTEN PERMISSION.

THIS DRAWING DOES NOT INCLUDE NECESSARY COMPONENTS FOR CONSTRUCTION SAFETY.

ALL CONSTRUCTION MUST BE DONE IN COMPLIANCE WITH THE OCCUPATIONAL SAFETY AND HEALTH ACT OF 1970 AND THE RULES AND REGULATIONS THERETO APPURTENANT

DRAWN BY: ALL	SCALE: AS NOTED
DESIGNED BY: TCW/JAV	DATE: 8/26/15
CHECKED BY: TCW	LAST MODIFIED 1/27/16
COMM. NO. C1115-15	FILE NO.: XXX
DRAWING NAME: SWM DETAILS.DWG	

SHEET NO. CE-19 of 21

CE-19

© 2016 LANDMARK SCIENCE & ENGINEERING

STORMTECH GENERAL NOTES

1. STORMTECH LLC ("STORMTECH") REQUIRES INSTALLING CONTRACTORS TO USE AND UNDERSTAND STORMTECH'S LATEST INSTALLATION INSTRUCTIONS PRIOR TO BEGINNING SYSTEM INSTALLATION.
2. STORMTECH TECHNICAL SERVICES DEPARTMENT OFFERS INSTALLATION CONSULTATIONS TO INSTALLING CONTRACTORS. CONTACT OUR TECHNICAL SERVICES REPRESENTATIVE AT LEAST 30 DAYS PRIOR TO SYSTEM INSTALLATION TO ARRANGE A PRE-INSTALLATION CONSULTATION. OUR REPRESENTATIVES CAN THEN ANSWER QUESTIONS OR ADDRESS COMMENTS ON THE STORMTECH CHAMBER SYSTEM AND INFORM THE INSTALLING CONTRACTOR OF THE MINIMUM INSTALLATION REQUIREMENTS BEFORE BEGINNING THE SYSTEM'S CONSTRUCTION. CALL 1-888-892-2694 TO SPEAK TO A TECHNICAL SERVICE REPRESENTATIVE OR VISIT TO RCEIVE A COPY OF OUR INSTALLATION INSTRUCTIONS.
3. STORMTECH'S REQUIREMENTS FOR SYSTEMS WITH PAVEMENT DESIGN (ASPHALT, CONCRETE PAVERS, ETC.): MINIMUM COVER IS 18 INCHES NOT INCLUDING PAVEMENT; MAXIMUM COVER IS 96 INCHES INCLUDING PAVEMENT. FOR INSTALLATIONS THAT DO NOT INCLUDE PAVEMENT, WHERE RUTTING FROM VEHICLES MAY OCCUR, MINIMUM REQUIRED COVER IS 24 INCHES, MAXIMUM COVER IS 96 INCHES.
4. THE CONTRACTOR MUST REPORT ANY DISCREPANCIES WITH THE SYSTEM SUBGRADE SOIL'S BEARING CAPACITY TO THE DESIGN ENGINEER.
5. CHECK CHAMBERS FOR SHIPPING DAMAGE PRIOR TO INSTALLATION. UNITS THAT HAVE BEEN DAMAGED MUST NOT BE INSTALLED. CONTACT STORMTECH IMMEDIATELY UPON DISCOVERY OF ANY DAMAGE.
6. AASHTO M288 CLASS 2 NON-WOVEN GEOTEXTILE (FILTER FABRIC) MUST BE USED AS INDICATED IN THE PROJECT PLANS.
7. TO MAINTAIN ROW SEPARATION DISTANCES AND PREVENT CHAMBER DISPLACEMENT, PLACE STONE BETWEEN CHAMBER ROWS AND AROUND PERIMETER AS REQUIRED BY THE MOST CURRENT VERSION OF STORMTECH'S INSTALLATION INSTRUCTIONS.
8. BACKFILLING OVER THE CHAMBER SYSTEM MUST BE IN ACCORDANCE WITH THE MOST CURRENT VERSION OF STORMTECH'S INSTALLATION INSTRUCTIONS.
9. THE CONTRACTOR MUST REFER TO STORMTECH'S INSTALLATION INSTRUCTIONS FOR TABLES OF ACCEPTABLE VEHICLE LOADS AT VARIOUS DEPTHS OF COVER. THIS INFORMATION IS ALSO AVAILABLE AT WWW.STORMTECH.COM. THE CONTRACTOR IS RESPONSIBLE FOR PREVENTING VEHICLES THAT EXCEED STORMTECH'S REQUIREMENTS FROM TRAVELING ACROSS OR PARKING OVER THE STORMWATER SYSTEM. TEMPORARY FENCING, WARNING TAPE AND APPROPRIATELY LOCATED SIGNS ARE COMMONLY USED TO PREVENT UNAUTHORIZED VEHICLES FROM TRAVELING OVER THE STORMWATER SYSTEM.
10. THE CONTRACTOR MUST APPLY EROSION AND SEDIMENT CONTROL MEASURES TO PROTECT THE STORMWATER SYSTEM DURING ALL PHASES OF SITE CONSTRUCTION PER LOCAL CODES AND DESIGN ENGINEER'S SPECIFICATIONS.
11. STORMTECH PRODUCTS MUST BE DESIGNED AND INSTALLED IN ACCORDANCE WITH STORMTECH'S MINIMUM REQUIREMENTS AS NOTED IN THE STORMTECH DESIGN MANUAL. FAILURE TO DO SO WILL VOID THE LIMITED WARRANTY.
12. STORMTECH PRODUCT WARRANTY IS LIMITED. SEE CURRENT PRODUCT WARRANTY FOR DETAILS. TO ACQUIRE A COPY CALL STORMTECH AT 1-888-892-2694 OR VISIT WWW.STORMTECH.COM
13. CONTRACTOR SHOULD REFER TO GEOTECHNICAL REPORT PREPARED BY GEO-TECHNOLOGY ASSOCIATES, INC. DATED SEPTEMBER 2014 FOR SUBSURFACE SOIL AND INFILTRATION INVESTIGATION DATA AND GEOTECHNICAL CONSTRUCTION RECOMMENDATIONS.

FACILITY SPECIFIC OPERATION & MAINTENANCE GUIDELINES FOR SUBSURFACE INFILTRATION FACILITY

FUNCTION:	THESE STORMWATER FACILITIES ARE DESIGNED TO STORE AND INFILTRATE STORMWATER AND SHOULD NOT HOLD WATER FOR MORE THAN 48 HOURS.
INSPECTION:	SELF INSPECT SEMI-ANNUALLY (SPRING AND FALL) AND AFTER STORM EVENTS OF 2 INCHES OR MORE.
TRASH AND DEBRIS:	REMOVE TRASH AND DEBRIS ON A REGULAR BASIS FROM ALL INLETS AND OUTFALL STRUCTURES.
SOIL:	N/A
EROSION:	N/A
MOWING:	N/A
BUFFERS:	N/A
FENCING:	N/A
SPECIAL CONSIDERATIONS:	PROPERTY OWNER IS TO MAINTAIN THE FACILITY IN ACCORDANCE WITH THE STORMTECH MAINTENANCE REQUIREMENTS.

SUBSURFACE DETENTION WITH INFILTRATION SEQUENCE OF CONSTRUCTION

A. CONTRACTOR SHALL INSTALL ORANGE SAFETY FENCING AROUND EACH FACILITY LOCATION.
B. CONTRACTOR SHALL CONTACT THE CCR AT LEAST 3 WORKING DAYS BEFORE CONSTRUCTION OF THE BASIN COMMENCES SO THE CCR CAN BE ON-SITE. SEE CCR RESPONSIBILITIES IN GENERAL E&S CONTROL PLAN NOTES.
C. DRAINAGE AREA TO FACILITY IS TO BE STABILIZED OR TEMPORARILY DIVERTED AROUND FACILITY PRIOR TO INSTALLATION AND UNTIL SITE IS STABILIZED.
D. EXCAVATE THE INFILTRATION PRACTICE TO THE DESIGN DIMENSIONS FROM THE SIDE, USING A BACKHOE OR EXCAVATOR. NO HEAVY EQUIPMENT IS PERMITTED WITHIN THE FACILITY AREA.
E. HAVE GEOTECHNICAL ENGINEER EVALUATE THE SUBGRADE BEFORE PROCEEDING. A REPORT OF THESE FINDINGS MUST BE SUBMITTED TO AND ACCEPTED BY NEW CASTLE COUNTY ENGINEERING SECTION PRIOR PROCEEDING. IF THE REPORT IS NOT RECEIVED AND ACCEPTED PRIOR TO INSTALLATION, THE FACILITY WILL BE REMOVED AND REINSTALLED AT THE DEVELOPERS EXPENSE.
F. INSTALL GEOTEXTILE PER DESIGN ON THE TRENCH SIDES. LARGE TREE ROOTS ARE TO BE TRIMMED FLUSH WITH THE SIDES OF INFILTRATION TRENCHES TO PREVENT PUNCTURING OR TEARING OF THE FILTER FABRIC DURING SUBSEQUENT INSTALLATION PROCEDURES. WHEN LAYING OUT THE GEOTEXTILE, THE WIDTH SHOULD INCLUDE SUFFICIENT MATERIAL TO COMPENSATE FOR PERIMETER IRREGULARITIES IN THE TRENCH AND FOR A 6-INCH MINIMUM OVERLAP AT THE TOP OF THE TRENCH. THE FILTER FABRIC ITSELF SHOULD BE TUCKED UNDER THE SAND LAYER ON THE BOTTOM OF THE INFILTRATION TRENCH. STONES OR OTHER ANCHORING OBJECTS SHOULD BE PLACED ON THE FABRIC AT THE TRENCH SIDES, TO KEEP THE TRENCH OPEN DURING WINDY PERIODS. VOIDS MAY OCCUR BETWEEN THE FABRIC AND THE EXCAVATED SIDES OF A TRENCH. NATURAL SOILS SHOULD BE PLACED IN ALL VOIDS, TO ENSURE THE FABRIC CONFORMS SMOOTHLY TO THE SIDES OF EXCAVATION.
G. SCARIFY THE BOTTOM OF THE INFILTRATION PRACTICE, AND SPREAD 6 INCHES OF SAND ON THE BOTTOM AS A FILTER LAYER PER DESIGN.
H. PLACE IINLET AND OUTLET STRUCTURES WITHIN EXCAVATED AREA. INSTALL OUTLET CULVERT WITH INLINE CHECK VALVE. PER PLAN SPECIFICATION FOR PREVENTION OF BACKFLOW INTO THIS SYSTEM.
I. PLACE STONE TO BOTTOM ELEVATION OF STORAGE CHAMBERS, PLACE CHAMBERS AND HEADER PIPES PER DESIGN IN PLAN VIEW, ADD REMAINING STONE AND INSPECTION PORT(S).
J. PLACE END CAPS ON ALL PIPE INLETS INTO THE SYSTEM UNTIL UPSTREAM DRAINAGE AREA HAS BEEN STABLILZED.
K. AN AS-BUILT SURVEY MUST BE PERFORMED AND THE REQUIRED STORMWATER FACILITY POST-CONSTRUCTION VERIFICATION SUBMISSION SHALL BE SUBMITTED TO NEW CASTLE COUNTY AFTER FINAL COMPLETION OF THE FACILITY FOR FINAL APPROVAL PRIOR TO ISSUANCE OF A CERTIFICATE OF OCCUPANCY.

GENERAL OPERATION & MAINTENANCE GUIDELINES

THE SUBSURFACE INFILTRATION FACILITY SHALL BE MAINTAINED BY THE PROPERTY OWNER OR ASSIGNS OF THE PROPERTY.

1. THE DNREC SEDIMENT AND STORMWATER PROGRAM AND/OR THE RELEVANT DELEGATED AGENCY RESERVES THE RIGHT TO ENTER PRIVATE PROPERTY FOR PURPOSES OF PERIODIC SITE REVIEWS.
2. NEW CASTLE COUNTY DEPARTMENT OF LAND USE ENGINEERING SECTION SHALL BE NOTIFIED WITHIN 30 BUSINESS DAYS IF THE PROPERTY OWNERSHIP IS TRANSFERRED TO A NEW PERSON OR ENTITY.
3. THE DNREC SEDIMENT AND STORMWATER PROGRAM AND/OR THE RELEVANT DELEGATED AGENCY MAY SEEK ENFORCEMENT ACTION AGAINST ANY OWNER DEEMED NEGLIGENT IN FULFILLING THE OPERATION AND MAINTENANCE REQUIREMENTS OF THE DELAWARE SEDIMENT AND STORMWATER REGULATIONS.
4. NEW CASTLE COUNTY DEPARTMENT OF LAND USE ENGINEERING SECTION SHALL BE CONTACTED IF A CONCERN ARISES REGARDING A STORMWATER MANAGEMENT FACILITY, BEFORE ANY NON-ROUTINE MAINTENANCE, OR IF MODIFICATIONS TO THE FACILITY ARE DESIRED.
5. ANY DESIGN MODIFICATIONS MADE TO THE STORMWATER SYSTEM SHALL REQUIRE THE CREATION OF A NEW POST-CONSTRUCTION STORMWATER MANAGEMENT PLAN AND/OR OPERATIONS AND MAINTENANCE PLAN, WITH APPROVAL OF THE PLAN(S) BY NEW CASTLE COUNTY DEPARTMENT OF LAND USE ENGINEERING SECTION.
6. FOR ALL STORMWATER EASEMENT AREAS (i.e. ACCESS, MAINTENANCE, OR OFF-SITE) AND THE MINIMUM 10-FOOT WIDE ACCESSWAYS TO ALL STORMWATER FACILITIES AND THEIR STRUCTURAL COMPONENTS, REGULAR MOWING SHALL BE PERFORMED TO KEEP THE GRASS 6" OR LESS; NO TREES OR SHRUBS SHALL BE PLANTED, AND ANY FOUND GROWING SHALL BE REMOVED; AND NO PERMANENT STRUCTURES, SUCH AS FENCES OR SHEDS, SHALL BE LOCATED WITHIN THE EASEMENT OR ACCESSWAY.
7. BEFORE ANY EARTHWORK OR EXCAVATION TAKES PLACE, THE CONTRACTOR SHALL CALL MISS UTILITY AT 811 OR 1-800-282-8555 AT LEAST 48 HOURS PRIOR TO CONSTRUCTION TO HAVE ALL EXISTING UTILITIES MARKED ON SITE.

P:\C1115-15 THE COMMONS AT LITTLE FALLS PARKING GARAGE\DWG\CNST\S & S\POST-CNST\SWM DETAILS.DWG

FACILITY #9 (SUBSURFACE INFILTRATION) HYDRAULIC DATA

STORM FREQ. (YRS.)	EXFILTRATION Q (CFS)	EXFILTRATION VOLUME (CU. FT.)	OUTFLOW Q (CFS)	OUTFLOW VOLUME (CU. FT.)	W.S. EL. (FT.)
1 (RPv)	0.89	17,854	0.00	0	209.23
10 (Cv)	0.89	30,343	1.68	4,485	210.32
100 (Fv)	0.89	41,608	6.03	14,174	211.60

FACILITY I.D.	D.A.	IMPERVIOUS
FACILITY #9 SUBSURACE	2.28 AC.	1.87 ACRES

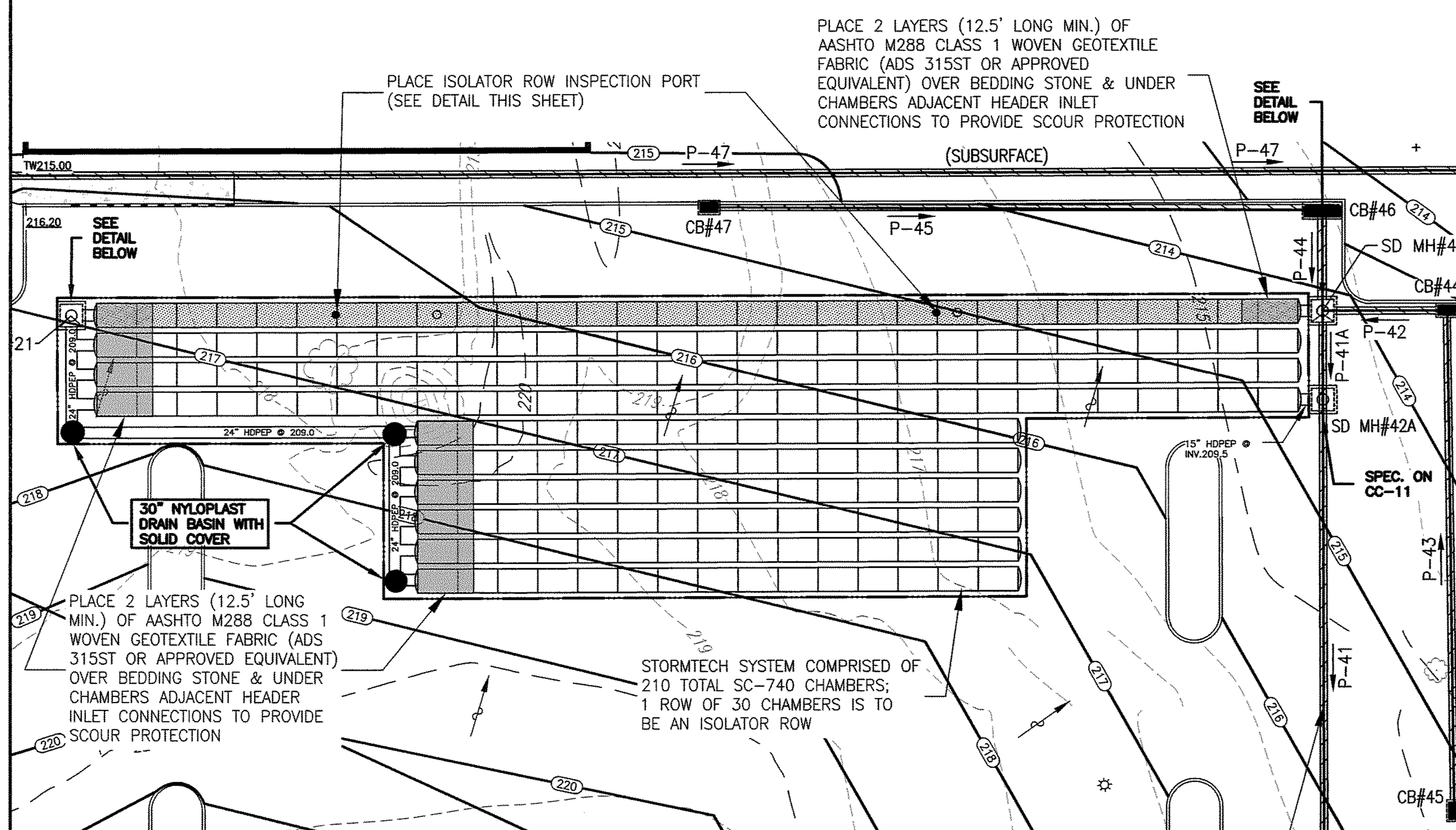

SWM FACILITY #9 (SUBSURFACE INFILTRATION)

SCALE: 1"=20'

NEW PIPE MUST BE INCLUDED IN SWM AS-BUILT SUBMITTAL PACKAGE SINCE THIS SYSTEM IS REPRESENTS THE OUTFALL FOR THE UPSTREAM SWM FACILITY

THIS PROPOSED SUB-SURFACE STORMWATER MANAGEMENT AREA IS TO BE CONSTRUCTED WITH STORMTECH SC-740 CHAMBERS (OR APPROVED EQUIVALENT)

CAREFUL FIELD REVIEW OF THE SOIL CONDITIONS AT THE BASE OF EACH STORMWATER MANAGEMENT FACILITY IS TO BE PERFORMED DURING CONSTRUCTION BY A QUALIFIED GEO-TECHNICAL ENGINEER THAT IS FAMILIAR WITH THE CURRENT GEO-TECHNICAL REPORT PREPARED BY GEO-TECHNOLOGY ASSOCIATES, INC.

SPECIFICATIONS FOR ALL STORM SEWER PIPES AND STRUCTURES PROVIDED ON GENERAL DEVELOPMENT PLAN SHEETS CC-08 THROUGH CC-11 EXCEPT AS OTHERWISE DETAILED ON STORMWATER DETAIL SHEETS CE-16 THROUGH CE-21 AND CC-03

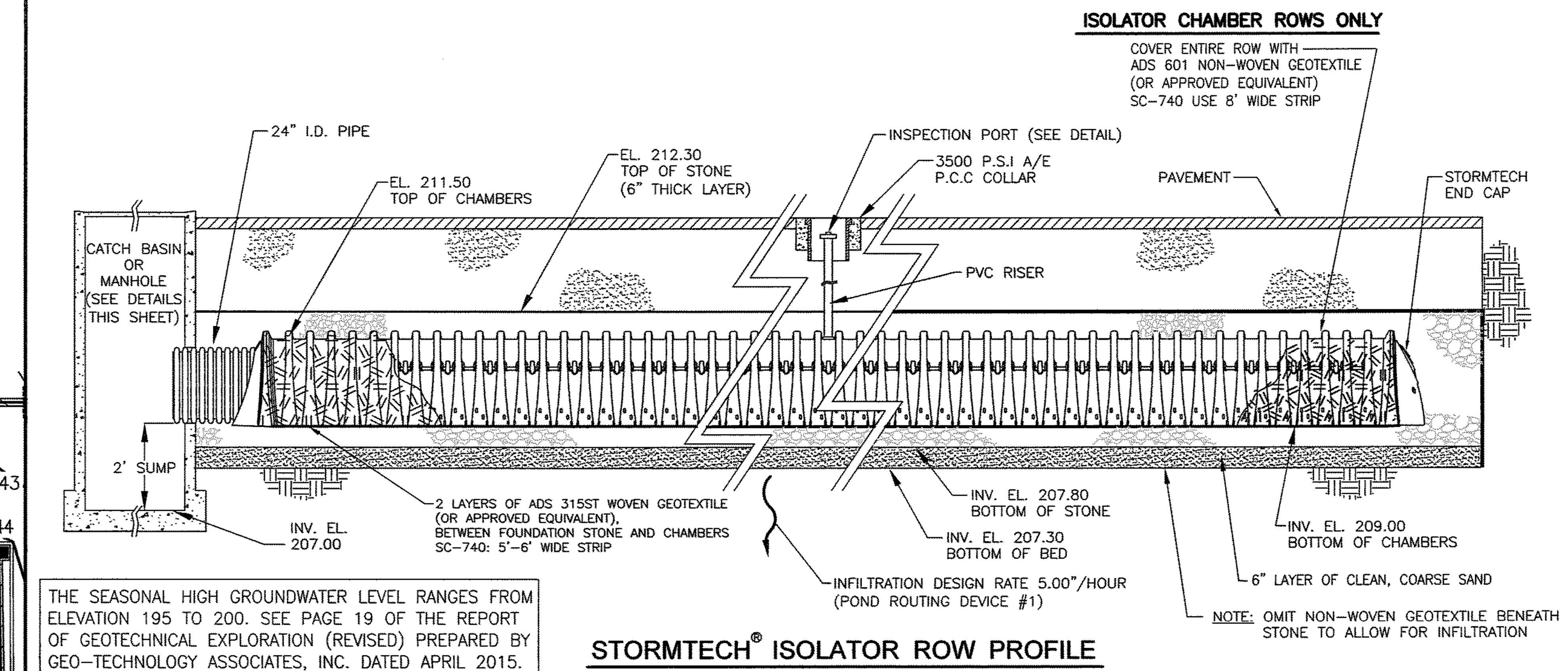

THE SEASONAL HIGH GROUNDWATER LEVEL RANGES FROM ELEVATION 195 TO 200. SEE PAGE 19 OF THE REPORT OF GEOTECHNICAL EXPLORATION (REVISED) PREPARED BY GEO-TECHNOLOGY ASSOCIATES, INC. DATED APRIL 2015.

STORMTECH® ISOLATOR ROW PROFILE

N.T.S.

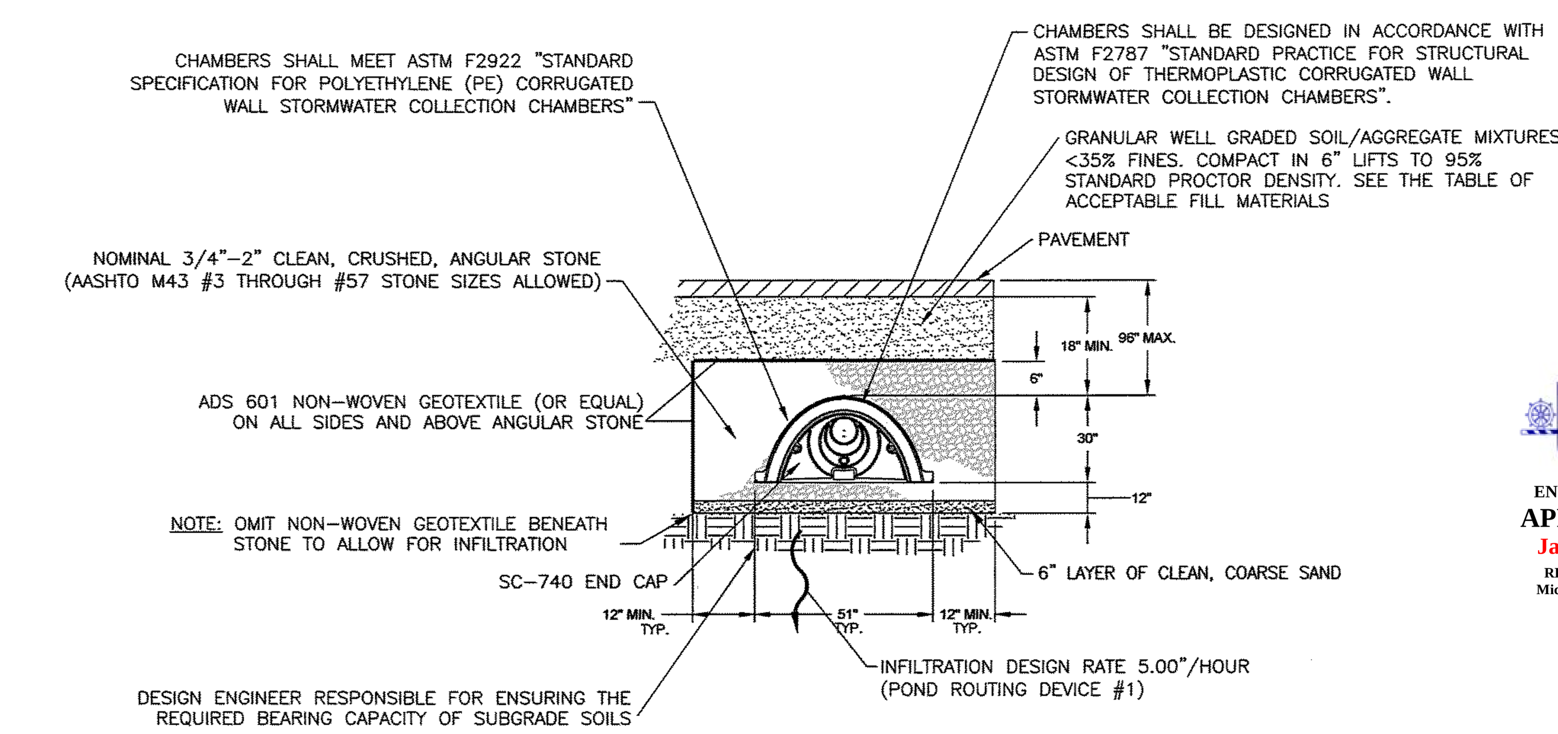

STORMTECH® TYPICAL SECTION

N.T.S.

ENGINEERING APPROVAL Jan 28, 2016 REVIEWED BY Michael Clendaniel

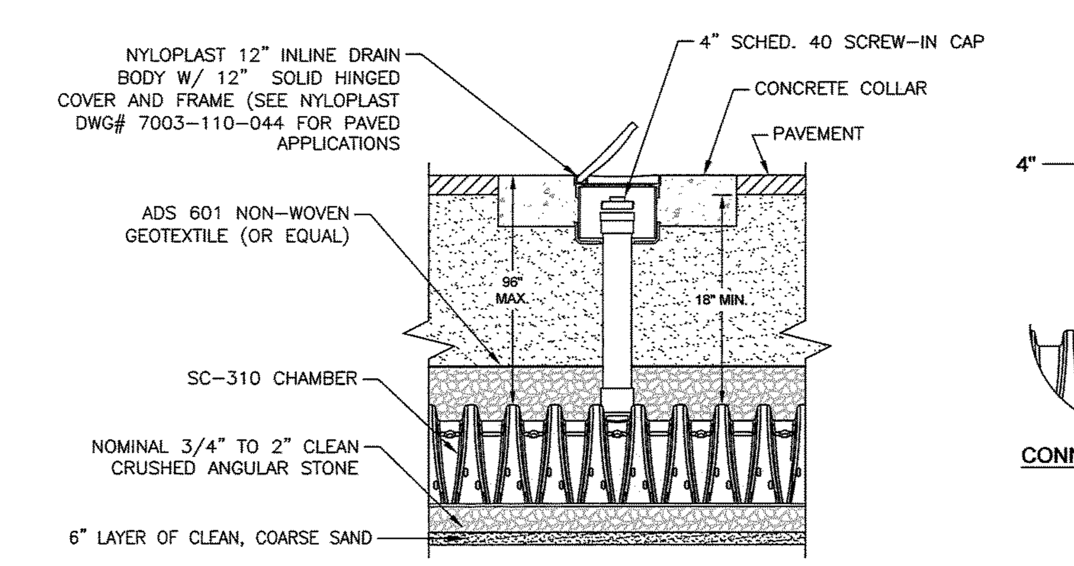

INSPECTION PORT DETAIL

N.T.S.

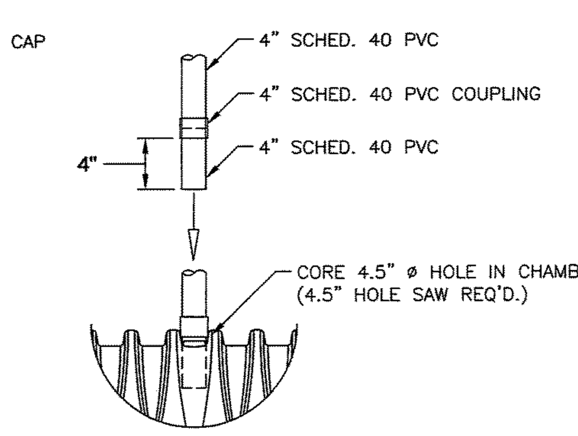

CONNECTION DETAIL

N.T.S.

NOTES:
1. INSPECTION PORT MUST BE CONNECTED THROUGH KNOCK-OUT LOCATED AT CENTER OF CHAMBER.
2. ALL SCHEDULE 40 FITTINGS TO BE SOLVENT CEMENTED.

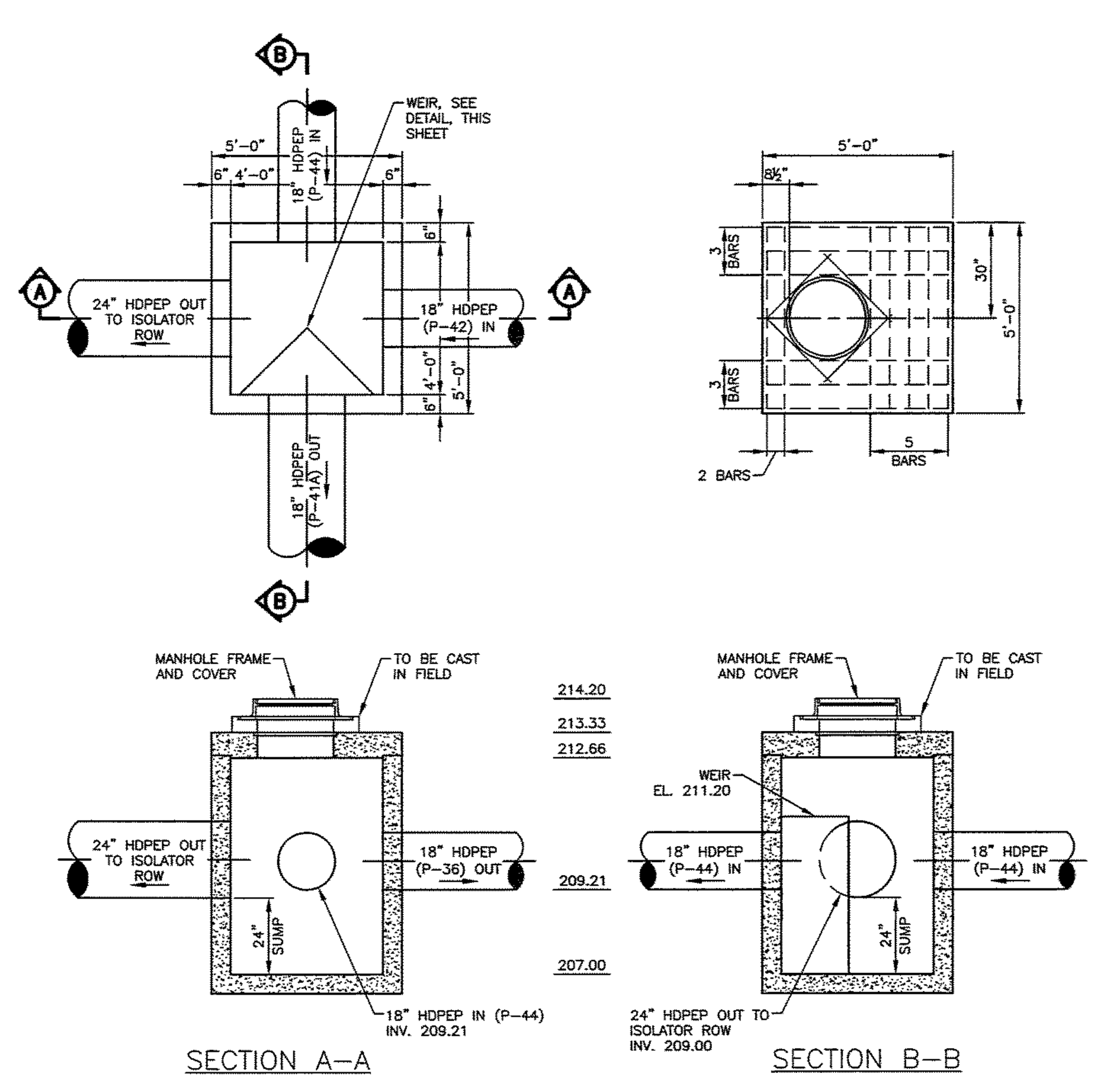

STORM MANHOLE #43 DETAIL

SCALE: 1"=4'

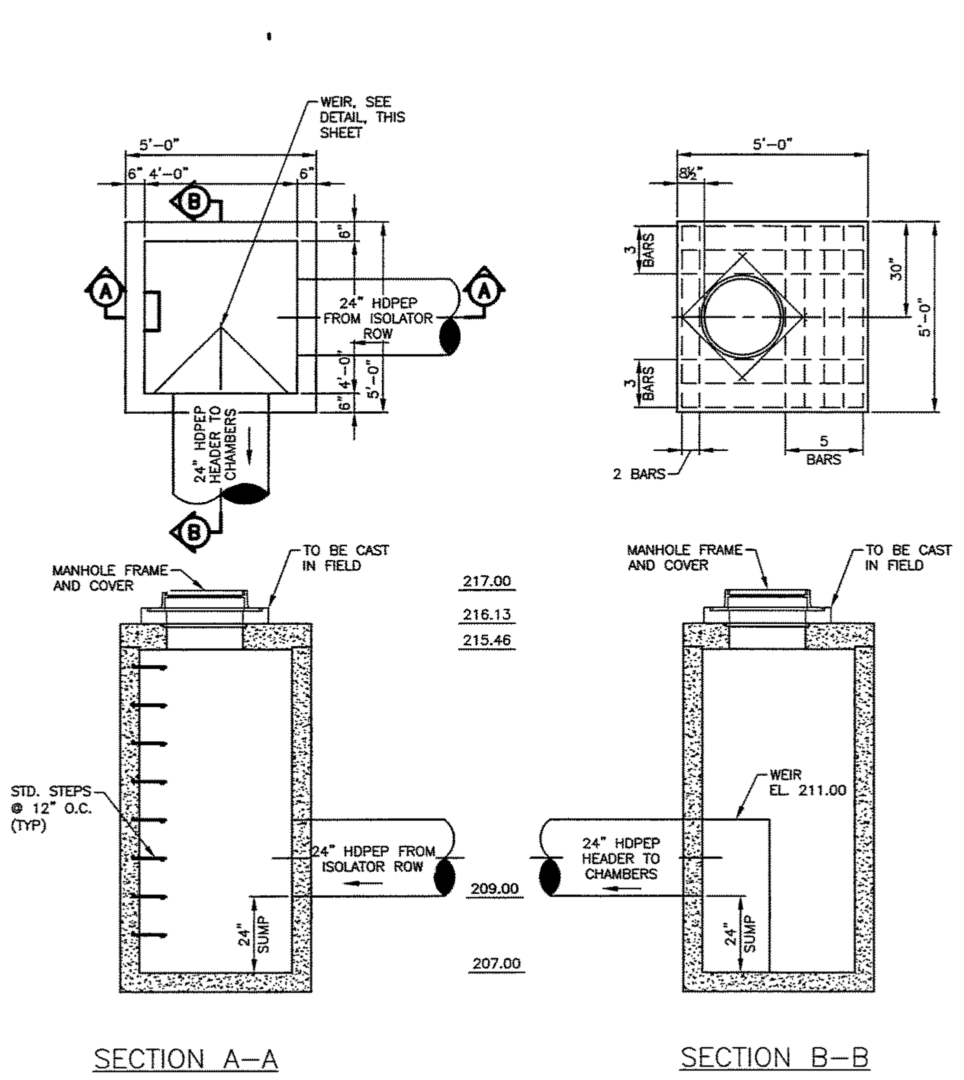

STORM MANHOLE #21 DETAIL

SCALE: 1"=4'

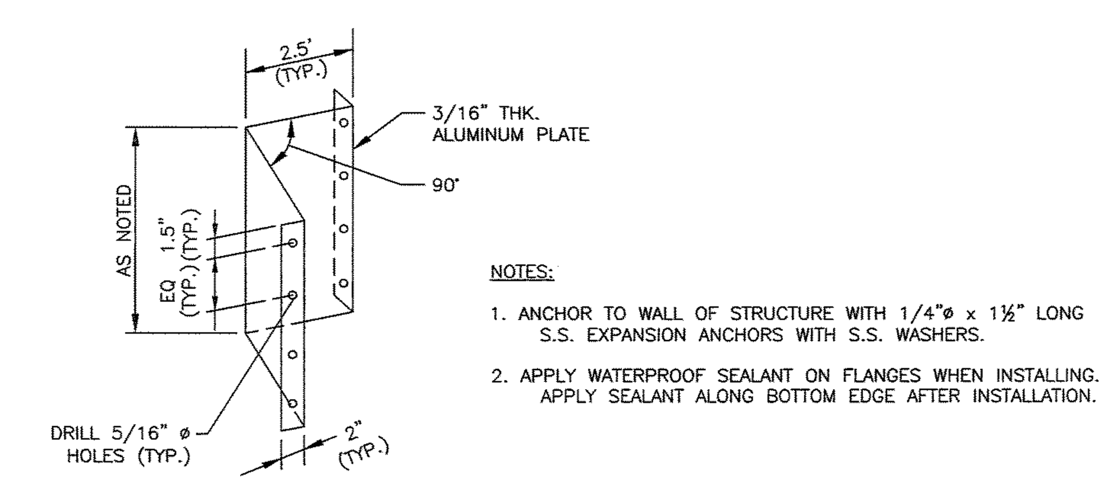

NOTES:
1. ANCHOR TO WALL OF STRUCTURE WITH 1/4"ø x 1½" LONG S.S. EXPANSION ANCHORS WITH S.S. WASHERS.
2. APPLY WATERPROOF SEALANT ON FLANGES WHEN INSTALLING. APPLY SEALANT ALONG BOTTOM EDGE AFTER INSTALLATION.

WEIR DETAIL

N.T.S.

811 Know what's below. Call before you dig.

MISS UTILITY PHONE 1-800-282-8555 PROTECT YOURSELF, GIVE THREE WORKING DAYS NOTICE

REVISIONS
1. REV. PER NCC REVIEW COMMENTS DATED 11-06-15 — CHECKED BY TCW 11-10-15
2. REV. PER NCC REVIEW COMMENTS DATED 1-19-16 — TCW 1-19-16
3. ISSUED FOR CONSTRUCTION 1-27-2016 — TCW 1-27-16

APPLICATION NO. 2015-0556-S
POST-CONSTRUCTION STORMWATER MANAGEMENT PLAN-FACILITY #9
FOR
THE COMMONS AT LITTLE FALLS
SEDIMENT & STORMWATER MANAGEMENT PLANS
CHRISTIANA HUNDRED – NEW CASTLE COUNTY, DELAWARE

OWNER
CSC SPECTRUM LITTLE FALLS, LLC & NWC-SPE LLC
C/O TREFOIL PROPERTIES LP
1690 SUMNEYTOWN PIKE, SUITE 240
LANSDALE, PA 19446
(215) 855-5100

Landmark Science & Engineering
100 WEST COMMONS BOULEVARD, SUITE 301
NEW CASTLE, DELAWARE 19720
PHONE - (302) 323-9377 • FAX - (302) 323-9461
INFO@LANDMARK-SE.COM • WWW.LANDMARK-SE.COM
NEW CASTLE, DE (302) 323-9377
DOVER, DE (302) 734-9597
HAVRE DE GRACE, MD (410) 939-2144

THIS DRAWING AND THE DESIGN SHOWN ARE THE EXCLUSIVE PROPERTY OF LANDMARK SCIENCE AND ENGINEERING AND SHALL NOT BE ALTERED OR COPIED WITHOUT WRITTEN PERMISSION.
THIS DRAWING DOES NOT INCLUDE NECESSARY COMPONENTS FOR CONSTRUCTION SAFETY.
ALL CONSTRUCTION MUST BE DONE IN COMPLIANCE WITH THE OCCUPATIONAL SAFETY AND HEALTH ACT OF 1970 AND THE RULES AND REGULATIONS THERETO APPURTENANT

DRAWN BY: ALL	SCALE: AS NOTED
DESIGNED BY: TCW/JAV	DATE: 8/26/15
CHECKED BY: TCW	LAST MODIFIED 1/27/16
COMM. NO. C1115-15	FILE NO.: XXX
DRAWING NAME: SWM DETAILS.DWG	
CE-20	SHEET NO. CE-20 of 21

© 2016 LANDMARK SCIENCE & ENGINEERING

STORMTECH GENERAL NOTES

1. STORMTECH LLC ("STORMTECH") REQUIRES INSTALLING CONTRACTORS TO USE AND UNDERSTAND STORMTECH'S LATEST INSTALLATION INSTRUCTIONS PRIOR TO BEGINNING SYSTEM INSTALLATION.
2. STORMTECH TECHNICAL SERVICES DEPARTMENT OFFERS INSTALLATION CONSULTATIONS TO INSTALLING CONTRACTORS. CONTACT OUR TECHNICAL SERVICES REPRESENTATIVE AT LEAST 30 DAYS PRIOR TO SYSTEM INSTALLATION TO ARRANGE A PRE-INSTALLATION CONSULTATION. OUR REPRESENTATIVES CAN THEN ANSWER QUESTIONS OR ADDRESS COMMENTS ON THE STORMTECH CHAMBER SYSTEM AND INFORM THE INSTALLING CONTRACTOR OF THE MINIMUM INSTALLATION REQUIREMENTS BEFORE BEGINNING THE SYSTEM'S CONSTRUCTION. CALL 1-888-892-2694 TO SPEAK TO A TECHNICAL SERVICE REPRESENTATIVE OR VISIT TO RCEIVE A COPY OF OUR INSTALLATION INSTRUCTIONS.
3. STORMTECH'S REQUIREMENTS FOR SYSTEMS WITH PAVEMENT DESIGN (ASPHALT, CONCRETE PAVERS, ETC.): MINIMUM COVER IS 18 INCHES NOT INCLUDING PAVEMENT; MAXIMUM COVER IS 96 INCHES INCLUDING PAVEMENT. FOR INSTALLATIONS THAT DO NOT INCLUDE PAVEMENT, WHERE RUTTING FROM VEHICLES MAY OCCUR, MINIMUM REQUIRED COVER IS 24 INCHES, MAXIMUM COVER IS 96 INCHES.
4. THE CONTRACTOR MUST REPORT ANY DISCREPANCIES WITH THE SYSTEM SUBGRADE SOIL'S BEARING CAPACITY TO THE DESIGN ENGINEER.
5. CHECK CHAMBERS FOR SHIPPING DAMAGE PRIOR TO INSTALLATION. UNITS THAT HAVE BEEN DAMAGED MUST NOT BE INSTALLED. CONTACT STORMTECH IMMEDIATELY UPON DISCOVERY OF ANY DAMAGE.
6. AASHTO M288 CLASS 2 NON-WOVEN GEOTEXTILE (FILTER FABRIC) MUST BE USED AS INDICATED IN THE PROJECT PLANS.
7. TO MAINTAIN ROW SEPARATION DISTANCES AND PREVENT CHAMBER DISPLACEMENT, PLACE STONE BETWEEN CHAMBER ROWS AND AROUND PERIMETER AS REQUIRED BY THE MOST CURRENT VERSION OF STORMTECH'S INSTALLATION INSTRUCTIONS.
8. BACKFILLING OVER THE CHAMBER SYSTEM MUST BE IN ACCORDANCE WITH THE MOST CURRENT VERSION OF STORMTECH'S INSTALLATION INSTRUCTIONS.
9. THE CONTRACTOR MUST REFER TO STORMTECH'S INSTALLATION INSTRUCTIONS FOR TABLES OF ACCEPTABLE VEHICLE LOADS AT VARIOUS DEPTHS OF COVER. THIS INFORMATION IS ALSO AVAILABLE AT WWW.STORMTECH.COM. THE CONTRACTOR IS RESPONSIBLE FOR PREVENTING VEHICLES THAT EXCEED STORMTECH'S REQUIREMENTS FROM TRAVELING ACROSS OR PARKING OVER THE STORMWATER SYSTEM. TEMPORARY FENCING, WARNING TAPE AND APPROPRIATELY LOCATED SIGNS ARE COMMONLY USED TO PREVENT UNAUTHORIZED VEHICLES FROM TRAVELING OVER THE STORMWATER SYSTEM.
10. THE CONTRACTOR MUST APPLY EROSION AND SEDIMENT CONTROL MEASURES TO PROTECT THE STORMWATER SYSTEM DURING ALL PHASES OF SITE CONSTRUCTION PER LOCAL CODES AND DESIGN ENGINEER'S SPECIFICATIONS.
11. STORMTECH PRODUCTS MUST BE DESIGNED AND INSTALLED IN ACCORDANCE WITH STORMTECH'S MINIMUM REQUIREMENTS AS NOTED IN THE STORMTECH DESIGN MANUAL. FAILURE TO DO SO WILL VOID THE LIMITED WARRANTY.
12. STORMTECH PRODUCT WARRANTY IS LIMITED. SEE CURRENT PRODUCT WARRANTY FOR DETAILS. TO ACQUIRE A COPY CALL STORMTECH AT 1-888-892-2694 OR VISIT WWW.STORMTECH.COM
13. CONTRACTOR SHOULD REFER TO GEOTECHNICAL REPORT PREPARED BY GEO-TECHNOLOGY ASSOCIATES, INC. DATED SEPTEMBER 2014 FOR SUBSURFACE SOIL AND INFILTRATION INVESTIGATION DATA AND GEOTECHNICAL CONSTRUCTION RECOMMENDATIONS.

FACILITY SPECIFIC OPERATION & MAINTENANCE GUIDELINES FOR SUBSURFACE INFILTRATION FACILITY

FUNCTION:	THESE STORMWATER FACILITIES ARE DESIGNED TO STORE AND INFILTRATE STORMWATER AND SHOULD NOT HOLD WATER FOR MORE THAN 48 HOURS.
INSPECTION:	SELF INSPECT SEMI-ANNUALLY (SPRING AND FALL) AND AFTER STORM EVENTS OF 2 INCHES OR MORE.
TRASH AND DEBRIS:	REMOVE TRASH AND DEBRIS ON A REGULAR BASIS FROM ALL INLETS AND OUTFALL STRUCTURES.
SOIL:	N/A
EROSION:	N/A
MOWING:	N/A
BUFFERS:	N/A
FENCING:	N/A
SPECIAL CONSIDERATIONS:	PROPERTY OWNER IS TO MAINTAIN THE FACILITY IN ACCORDANCE WITH THE STORMTECH MAINTENANCE REQUIREMENTS.

SUBSURFACE DETENTION WITH INFILTRATION SEQUENCE OF CONSTRUCTION

A. CONTRACTOR SHALL INSTALL ORANGE SAFETY FENCING AROUND EACH FACILITY LOCATION.

B. CONTRACTOR SHALL CONTACT THE CCR AT LEAST 3 WORKING DAYS BEFORE CONSTRUCTION OF THE BASIN COMMENCES SO THE CCR CAN BE ON-SITE. SEE CCR RESPONSIBILITIES IN GENERAL E&S CONTROL PLAN NOTES.

C. DRAINAGE AREA TO FACILITY IS TO BE STABILIZED OR TEMPORARILY DIVERTED AROUND FACILITY PRIOR TO INSTALLATION AND UNTIL SITE IS STABILIZED.

D. EXCAVATE THE INFILTRATION PRACTICE TO THE DESIGN DIMENSIONS FROM THE SIDE, USING A BACKHOE OR EXCAVATOR. NO HEAVY EQUIPMENT IS PERMITTED WITHIN THE FACILITY AREA.

E. HAVE GEOTECHNICAL ENGINEER EVALUATE THE SUBGRADE BEFORE PROCEEDING. A REPORT OF THESE FINDINGS MUST BE SUBMITTED TO AND ACCEPTED BY NEW CASTLE COUNTY ENGINEERING SECTION PRIOR PROCEEDING. IF THE REPORT IS NOT RECEIVED AND ACCEPTED PRIOR TO INSTALLATION, THE FACILITY WILL BE REMOVED AND REINSTALLED AT THE DEVELOPERS EXPENSE.

F. INSTALL GEOTEXTILE PER DESIGN ON THE TRENCH SIDES. LARGE TREE ROOTS ARE TO BE TRIMMED FLUSH WITH THE SIDES OF INFILTRATION TRENCHES TO PREVENT PUNCTURING OR TEARING OF THE FILTER FABRIC DURING SUBSEQUENT INSTALLATION PROCEDURES. WHEN LAYING OUT THE GEOTEXTILE, THE WIDTH SHOULD INCLUDE SUFFICIENT MATERIAL TO COMPENSATE FOR PERIMETER IRREGULARITIES IN THE TRENCH AND FOR A 6-INCH MINIMUM OVERLAP AT THE TOP OF THE TRENCH. THE FILTER FABRIC ITSELF SHOULD BE TUCKED UNDER THE SAND LAYER ON THE BOTTOM OF THE INFILTRATION TRENCH. STONES OR OTHER ANCHORING OBJECTS SHOULD BE PLACED ON THE FABRIC AT THE TRENCH SIDES, TO KEEP THE TRENCH OPEN DURING WINDY PERIODS. VOIDS MAY OCCUR BETWEEN THE FABRIC AND THE EXCAVATED SIDES OF A TRENCH. NATURAL SOILS SHOULD BE PLACED IN ALL VOIDS, TO ENSURE THE FABRIC CONFORMS SMOOTHLY TO THE SIDES OF EXCAVATION.

G. SCARIFY THE BOTTOM OF THE INFILTRATION PRACTICE, AND SPREAD 6 INCHES OF SAND ON THE BOTTOM AS A FILTER LAYER PER DESIGN.

H. PLACE IINLET AND OUTLET STRUCTURES WITHIN EXCAVATED AREA. INSTALL OUTLET CULVERT WITH INLINE CHECK VALVE. PER PLAN SPECIFICATION FOR PREVENTION OF BACKFLOW INTO THIS SYSTEM.

I. PLACE STONE TO BOTTOM ELEVATION OF STORAGE CHAMBERS, PLACE CHAMBERS AND HEADER PIPES PER DESIGN IN PLAN VIEW, ADD REMAINING STONE AND INSPECTION PORT(S).

J. PLACE END CAPS ON ALL PIPE INLETS INTO THE SYSTEM UNTIL UPSTREAM DRAINAGE AREA HAS BEEN STABLILZED.

K. AN AS-BUILT SURVEY MUST BE PERFORMED AND THE REQUIRED STORMWATER FACILITY POST-CONSTRUCTION VERIFICATION SUBMISSION SHALL BE SUBMITTED TO NEW CASTLE COUNTY AFTER FINAL COMPLETION OF THE FACILITY FOR FINAL APPROVAL PRIOR TO ISSUANCE OF A CERTIFICATE OF OCCUPANCY.

GENERAL OPERATION & MAINTENANCE GUIDELINES

THE SUBSURFACE INFILTRATION FACILITY SHALL BE MAINTAINED BY THE PROPERTY OWNER OR ASSIGNS OF THE PROPERTY.

1. THE DNREC SEDIMENT AND STORMWATER PROGRAM AND/OR THE RELEVANT DELEGATED AGENCY RESERVES THE RIGHT TO ENTER PRIVATE PROPERTY FOR PURPOSES OF PERIODIC SITE REVIEWS.
2. NEW CASTLE COUNTY DEPARTMENT OF LAND USE ENGINEERING SECTION SHALL BE NOTIFIED WITHIN 30 BUSINESS DAYS IF THE PROPERTY OWNERSHIP IS TRANSFERRED TO A NEW PERSON OR ENTITY.
3. THE DNREC SEDIMENT AND STORMWATER PROGRAM AND/OR THE RELEVANT DELEGATED AGENCY MAY SEEK ENFORCEMENT ACTION AGAINST ANY OWNER DEEMED NEGLIGENT IN FULFILLING THE OPERATION AND MAINTENANCE REQUIREMENTS OF THE DELAWARE SEDIMENT AND STORMWATER REGULATIONS.
4. NEW CASTLE COUNTY DEPARTMENT OF LAND USE ENGINEERING SECTION SHALL BE CONTACTED IF A CONCERN ARISES REGARDING A STORMWATER MANAGEMENT FACILITY, BEFORE ANY NON-ROUTINE MAINTENANCE, OR IF MODIFICATIONS TO THE FACILITY ARE DESIRED.
5. ANY DESIGN MODIFICATIONS MADE TO THE STORMWATER SYSTEM SHALL REQUIRE THE CREATION OF A NEW POST-CONSTRUCTION STORMWATER MANAGEMENT PLAN AND/OR OPERATIONS AND MAINTENANCE PLAN, WITH APPROVAL OF THE PLAN(S) BY NEW CASTLE COUNTY DEPARTMENT OF LAND USE ENGINEERING SECTION.
6. FOR ALL STORMWATER EASEMENT AREAS (i.e. ACCESS, MAINTENANCE, OR OFF-SITE) AND THE MINIMUM 10-FOOT WIDE ACCESSWAYS TO ALL STORMWATER FACILITIES AND THEIR STRUCTURAL COMPONENTS, REGULAR MOWING SHALL BE PERFORMED TO KEEP THE GRASS 6" OR LESS; NO TREES OR SHRUBS SHALL BE PLANTED, AND ANY FOUND GROWING SHALL BE REMOVED; AND NO PERMANENT STRUCTURES, SUCH AS FENCES OR SHEDS, SHALL BE LOCATED WITHIN THE EASEMENT OR ACCESSWAY.
7. BEFORE ANY EARTHWORK OR EXCAVATION TAKES PLACE, THE CONTRACTOR SHALL CALL MISS UTILITY AT 811 OR 1-800-282-8555 AT LEAST 48 HOURS PRIOR TO CONSTRUCTION TO HAVE ALL EXISTING UTILITIES MARKED ON SITE.

P:\C1115-15 THE COMMONS AT LITTLE FALLS PARKING GARAGE\DWG\CNST\S & S\POST-CNST\SWM DETAILS.DWG

FACILITY #10 (SUBSURFACE INFILTRATION) HYDRAULIC DATA

STORM FREQ. (YRS.)	EXFILTRATION Q (CFS)	EXFILTRATION VOLUME (CU. FT.)	OUTFLOW Q (CFS)	OUTFLOW VOLUME (CU. FT.)	W.S. EL. (FT.)
1 (RPv)	0.41	3,587	0.00	0	205.93
10 (Cv)	0.41	10,228	0.00	0	206.82
100 (Fv)	0.41	15,738	2.32	2,823	207.82

FACILITY I.D.	D.A.	IMPERVIOUS
FACILITY #10 SUBSURFACE	1.21 AC.	0.43 ACRES

THIS PROPOSED SUB-SURFACE STORMWATER MANAGEMENT AREA IS TO BE CONSTRUCTED WITH STORMTECH SC-740 CHAMBERS (OR APPROVED EQUIVALENT)

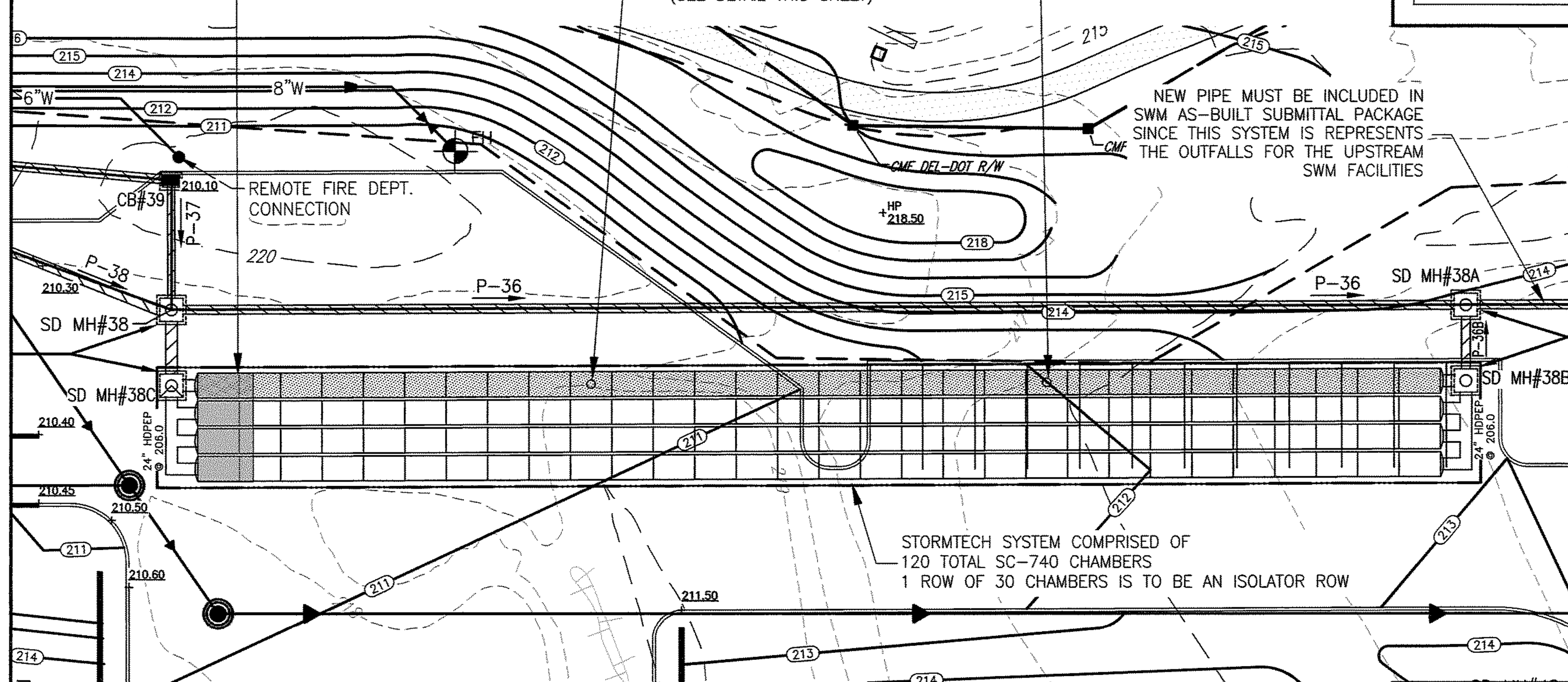

SWM FACILITY #10 (SUBSURFACE INFILTRATION)

SCALE: 1"=20'

CAREFUL FIELD REVIEW OF THE SOIL CONDITIONS AT THE BASE OF EACH STORMWATER MANAGEMENT FACILITY IS TO BE PERFORMED DURING CONSTRUCTION BY A QUALIFIED GEO-TECHNICAL ENGINEER THAT IS FAMILIAR WITH THE CURRENT GEO-TECHNICAL REPORT PREPARED BY GEO-TECHNOLOGY ASSOCIATES, INC.

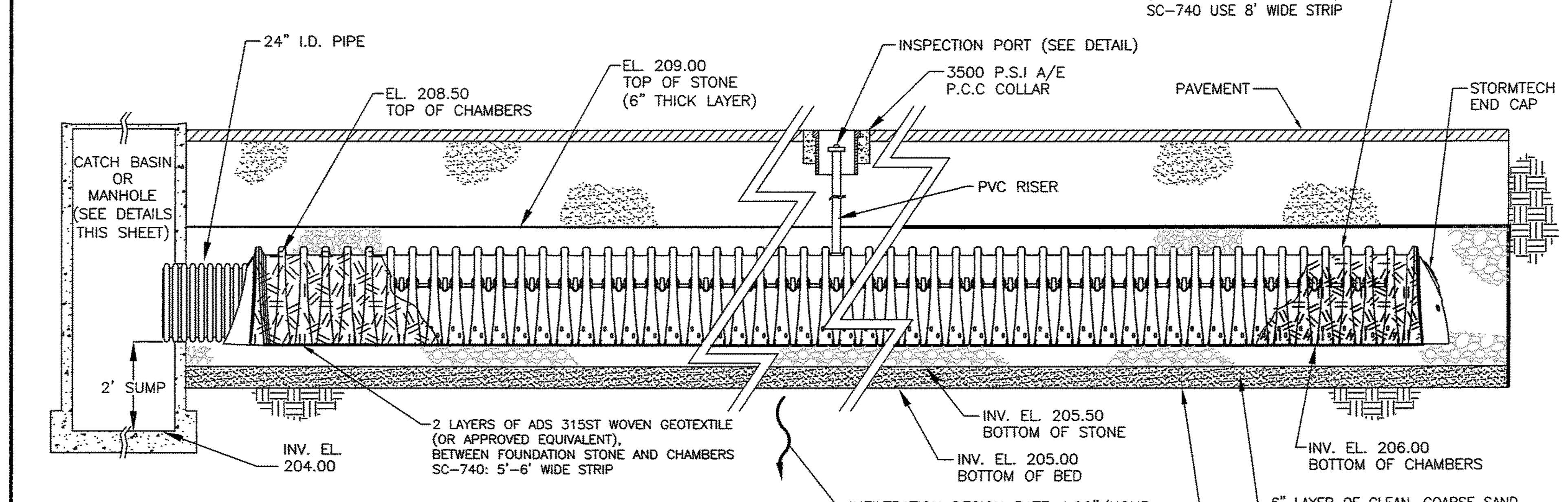

THE SEASONAL HIGH GROUNDWATER LEVEL RANGES FROM ELEVATION 195 TO 200. SEE PAGE 19 OF THE REPORT OF GEOTECHNICAL EXPLORATION (REVISED) PREPARED BY GEO-TECHNOLOGY ASSOCIATES, INC. DATED APRIL 2015.

STORMTECH® ISOLATOR ROW PROFILE

N.T.S.

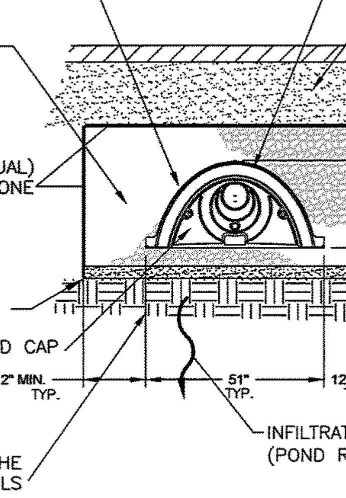

STORMTECH® TYPICAL SECTION

N.T.S.

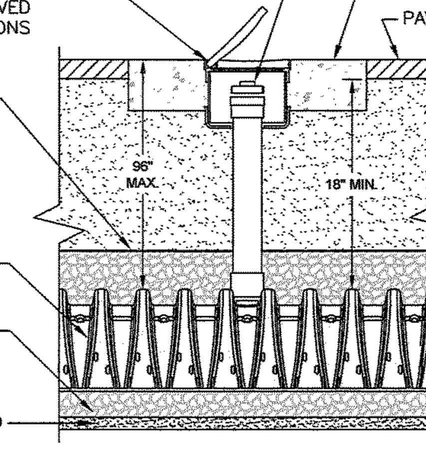

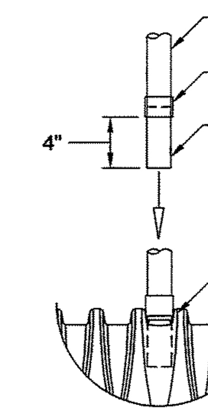

CONNECTION DETAIL

N.T.S.

NOTES:
1. INSPECTION PORT MUST BE CONNECTED THROUGH KNOCK-OUT LOCATED AT CENTER OF CHAMBER.
2. ALL SCHEDULE 40 FITTINGS TO BE SOLVENT CEMENTED.

INSPECTION PORT DETAIL

N.T.S.

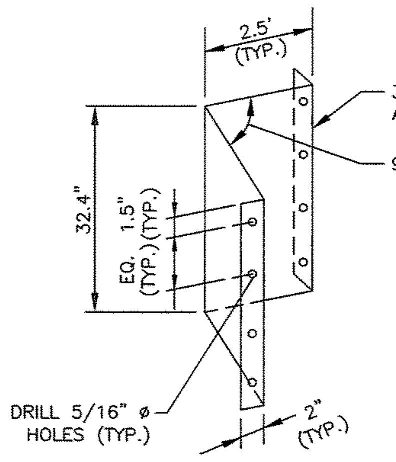

NOTES:
1. ANCHOR TO WALL OF STRUCTURE WITH 1/4"ø x 1½" LONG S.S. EXPANSION ANCHORS WITH S.S. WASHERS.
2. APPLY WATERPROOF SEALANT ON FLANGES WHEN INSTALLING. APPLY SEALANT ALONG BOTTOM EDGE AFTER INSTALLATION.

WEIR DETAIL

N.T.S.

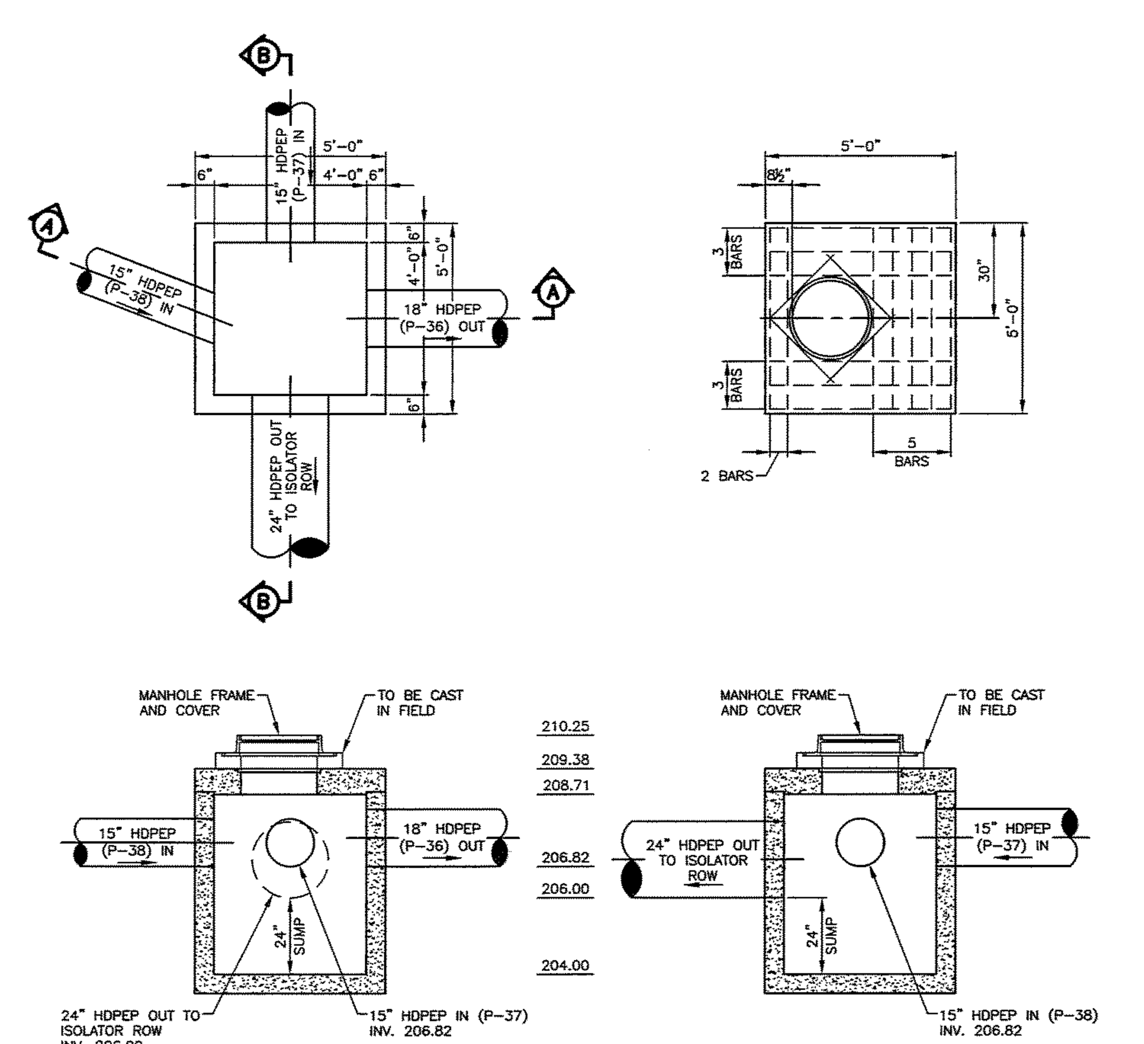

STORM MANHOLE # 38 DETAIL

SCALE: 1"=4'

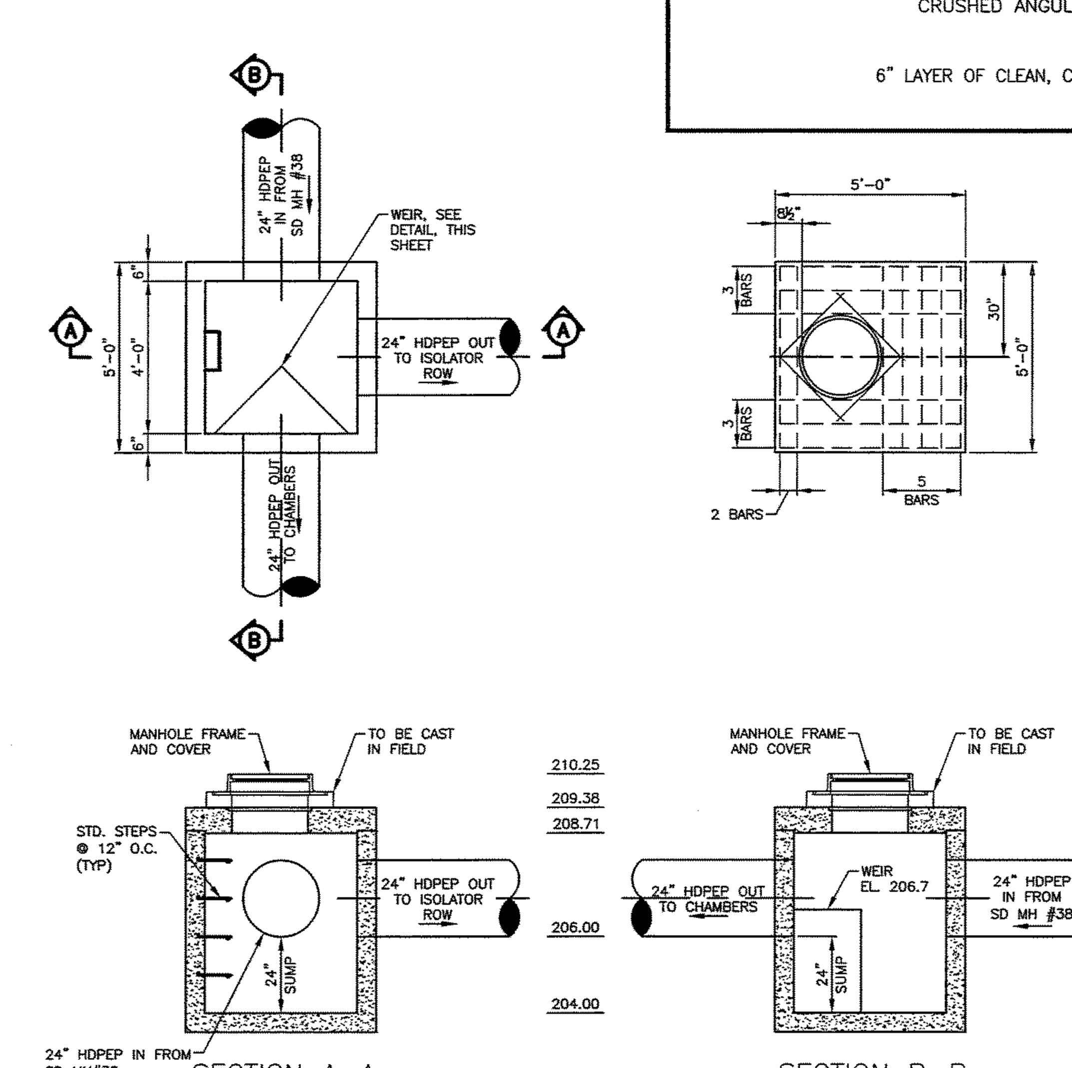

STORM MANHOLE # 38C DETAIL

SCALE: 1"=4'

SPECIFICATIONS FOR ALL STORM SEWER PIPES AND STRUCTURES PROVIDED ON GENERAL DEVELOPMENT PLAN SHEETS CC-08 THROUGH CC-11 EXCEPT AS OTHERWISE DETAILED ON STORMWATER DETAIL SHEETS CE-16 THROUGH CE-21 AND CC-03

ENGINEERING APPROVAL
Jan 28, 2016
REVIEWED BY
Michael Clendaniel

811 Know what's below. Call before you dig.
MISS UTILITY PHONE 1-800-282-8555 PROTECT YOURSELF, GIVE THREE WORKING DAYS NOTICE

REVISIONS	CHECKED BY
1. REV. PER NCC REVIEW COMMENTS DATED 11-06-15	TCW 11-10-15
2. REV. PER NCC REVIEW COMMENTS DATED 1-19-16	TCW 1-19-16
3. ISSUED FOR CONSTRUCTION 1-27-2016	TCW 1-27-16

APPLICATION NO. 2015-0556-S
POST-CONSTRUCTION STORMWATER MANAGEMENT PLAN-FACILITY #10
FOR
THE COMMONS AT LITTLE FALLS
SEDIMENT & STORMWATER MANAGEMENT PLANS
CHRISTIANA HUNDRED - NEW CASTLE COUNTY, DELAWARE

OWNER
CSC SPECTRUM LITTLE FALLS, LLC & NWC-SPE LLC
C/O TREFOIL PROPERTIES LP
1690 SUMNEYTOWN PIKE, SUITE 240
LANSDALE, PA 19446
(215) 855-5100

NEW CASTLE, DE (302) 323-9377
DOVER, DE (302) 734-9597
HAVRE DE GRACE, MD (410) 939-2144
Landmark Science & Engineering
100 WEST COMMONS BOULEVARD, SUITE 301
NEW CASTLE, DELAWARE 19720
PHONE - (302) 323-9377 • FAX - (302) 323-9461
INFO@LANDMARK-SE.COM • WWW.LANDMARK-SE.COM

THIS DRAWING AND THE DESIGN SHOWN ARE THE EXCLUSIVE PROPERTY OF LANDMARK SCIENCE AND ENGINEERING AND SHALL NOT BE ALTERED OR COPIED WITHOUT WRITTEN PERMISSION.
THIS DRAWING DOES NOT INCLUDE NECESSARY COMPONENTS FOR CONSTRUCTION SAFETY.
ALL CONSTRUCTION MUST BE DONE IN COMPLIANCE WITH THE OCCUPATIONAL SAFETY AND HEALTH ACT OF 1970 AND THE RULES AND REGULATIONS THERETO APPURTENANT

DRAWN BY: ALL	SCALE: AS NOTED	
DESIGNED BY: TCW/JAV	DATE: 8/26/15	
CHECKED BY: TCW	LAST MODIFIED 1/27/16	
COMM. NO. C1115-15	FILE NO.: XXX	
DRAWING NAME: SWM DETAILS.DWG		
CE-21	SHEET NO. CE-21 of 21	

© 2016 LANDMARK SCIENCE & ENGINEERING