RDI Workhorse Field Calibration and Pre-Deployment Tests

Compass Calibration Procedure

The built-in automated compass calibration procedure is similar to the alignment verification, but requires three rotations instead of one. The Workhorse uses the first two rotations to compute a new calibration matrix and the third to verify the calibration. It will not accept the new matrix unless the calibration was carried out properly, and it asks you to verify that you want to use the new calibration if it is not as good as the previous calibration. While you are turning the Workhorse for the two calibration rotations, the Workhorse checks the quality of the previous calibration and displays the results. It compares these results with the results of the third calibration rotation.

There are two compass calibrations to choose from; one only corrects for hard iron while the other corrects for both hard and soft iron characteristics for materials rotating with the ADCP. Hard iron effects are related to residual magnetic fields and cause single cycle errors while soft iron effects are related to magnetic permeability that distorts the earth's magnetic field and causes double cycle errors. In general, the hard iron calibration is recommended because the effect of hard iron dominates soft iron. If a large double cycle error exists, then use the combined hard and soft iron calibration.

a. Prepare the ADCP for calibration

b. Using *BBTalk,* send a Break to wake up the ADCP.

c. On the **Transfer** menu, click **Command History**. In the **Enter a Command** box, enter **AF** and click **OK**. When the calibration procedure starts, choose the calibration type.

d. Tilt the ADCP. Tilt an upward-looking Workhorse with a block under one side of the end-cap. A 35-mm block will give you an 11-degree tilt. Check the on-screen instructions to see if the orientation is OK. Adjust as necessary.
NOTE. The tilts must remain constant during the rotations. The transducer beam is the center point of the rotation.

e. When prompted, rotate the ADCP slowly 360 degrees (approximately 5 degrees per second).

f. The second rotation requires the ADCP to be tilted 15 degrees in another direction than from the first rotation. Follow the on-screen instructions to orient the ADCP correctly. When prompted, rotate the ADCP slowly 360 degrees (approximately 5 degrees per second).

g. The third rotation requires the ADCP to be tilted 15 degrees in another direction than from the first and second rotations. Follow the on-screen instructions to orient the ADCP correctly.

h. If the calibration procedure is successful, it records the new calibration matrix to nonvolatile memory. The ADCP will not change its matrix unless the calibration is properly carried out.

i. If the calibration procedure is not successful, return your ADCP to the original factory calibration, by using the AR-command. Try using the AR-command if you have trouble calibrating your compass. In some circumstances, a defective compass calibration matrix can prevent proper calibration.

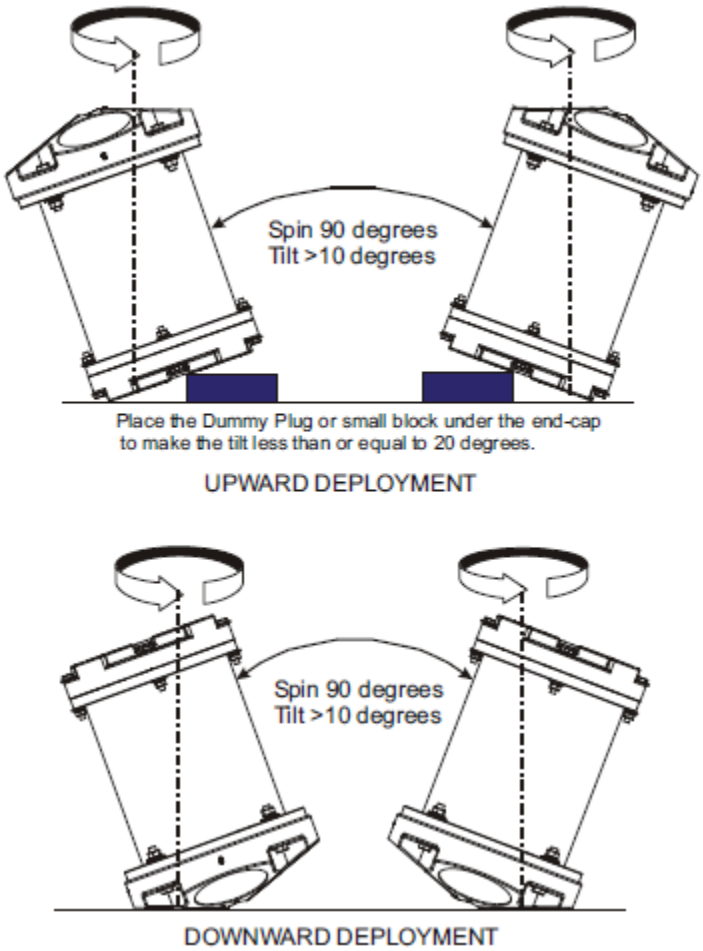

Figure 1. Compass Calibration

WorkHorse Pre-Deployment Tests with *BBTalk*

Use the following steps to test the ADCP.
NOTE. For stationary deployments, the *WinSC* or *BBTalk* tests are the only tests required to verify the ADCP is operating correctly. When the ADCP is mounted to a moving vessel, use the Dock Side test and the Sea Acceptance tests.

a. Interconnect and apply power to the system as described in the appropriate ADCP User's Guide.

b. Start the *BBTalk* program (for help on using *BBTalk*, see the RDI Tools User's Guide).

c. Press **<F2>** and run the script file TestWH.txt. The TestWH.txt script file runs PS0, PS3, PA, PC2, and the PC1 tests. The results of the tests will be printed to the screen and saved to the log file WH_RSLTS.txt. The WH_RSLTS.txt file will be created in the same directory that *BBTalk* is running from.

Deploy Commands List

WinSC sends the ADCP the Deploy? command. This will show a list of the deployment commands and their current setting. For example;

```
deploy?
Deployment Commands:
RE ---------------------- Recorder ErAsE
RN ---------------------- Set Deployment Name
WD = 111 100 000 --------- Data Out (Vel,Cor,Amp; PG,St,P0; P1,P2,P3)
WF = 0088 ---------------- Blank After Transmit (cm)
WN = 030 ----------------- Number of depth cells (1-128)
WP = 00045 --------------- Pings per Ensemble (0-16384)
WS = 0200 ---------------- Depth Cell Size (cm)
WV = 175 ----------------- Mode 1 Ambiguity Vel (cm/s radial)
BP = 000 ----------------- Bottom Track Pings per Ensemble
TE = 01:00:00.00 --------- Time per Ensemble (hrs:min:sec.sec/100)
TF = **/**/**,**:**:** --- Time of First Ping (yr/mon/day,hour:min:sec)
TP = 01:20.00 ------------ Time per Ping (min:sec.sec/100)
TS = 94/01/30,00:11:17 --- Time Set (yr/mon/day,hour:min:sec)
EA = +00000 -------------- Heading Alignment (1/100 deg)
EB = +00000 -------------- Heading Bias (1/100 deg)
ED = 00000 --------------- Transducer Depth (0 - 65535 dm)
ES = 35 ------------------ Salinity (0-40 pp thousand)
EX = 11111 --------------- Coord Transform (Xform: Type,Tilts,3 Bm,Map)
EZ = 1111101 ------------- Sensor Source (C,D,H,P,R,S,T)
CF = 11111 --------------- Flow Ctrl (EnsCyc;PngCyc;Binry;Ser;Rec)
CK ---------------------- Keep Parameters as USER Defaults
CR # -------------------- Retrieve Parameters (0 = USER, 1 = FACTORY)
CS ---------------------- Start Deployment
```

System Commands List

WinSC sends the ADCP the System? command. This will show a list of the system commands and their current setting. For example;

```
>system?
System Control, Data Recovery and Testing Commands:
AC ---------------------- Output Active Fluxgate & Tilt Calibration data
```

```
AF ---------------------- Field calibrate to remove hard/soft iron error
AR ---------------------- Restore factory fluxgate calibration data
AX ---------------------- Examine compass performance
AZ ---------------------- Zero pressure reading
CB = 411 ----------------- Serial Port Control (Baud; Par; Stop)
CP # --------------------- Polled Mode (0 = NORMAL, 1 = POLLED)
CZ ---------------------- Power Down Instrument
FC ---------------------- Clear Fault Log
FD ---------------------- Display Fault Log
OL ---------------------- Display Features List
PA ---------------------- Pre-Deployment Tests
PC1 --------------------- Beam Continuity
PC2 --------------------- Sensor Data
PS0 --------------------- System Configuration
PS3 --------------------- Transformation Matrices
RR ---------------------- Recorder Directory
RF ---------------------- Recorder Space used/free (bytes)
RY ---------------------- Upload Recorder Files to Host
```

Time Set

WinSC sends the ADCP the TS? command. This will show the current setting of the real time clock. For example;

```
>TS?
TS = 98/06/17,07:31:27 --- Time Set (yr/mon/day,hour:min:sec)
>
```

Recorder Free Space

WinSC sends the ADCP the RS command. This will show the amount of used and free recorder space in megabytes. For example;

```
>RS
RS = 000,010 --------- REC SPACE USED (MB), FREE (MB)
>
```

4.5 Display System Parameters

This tells the ADCP to display specific information about your ADCP. Both *WinSC* and *BBTalk* run this test. For example:

```
>ps0
Instrument S/N: 0
Frequency: 307200 HZ
Configuration: 4 BEAM, JANUS
Match Layer: 10
Beam Angle: 20 DEGREES
Beam Pattern: CONVEX
Orientation: DOWN
Sensor(s): HEADING TILT 1 TILT 2 DEPTH TEMPERATURE PRESSURE
Pressure Sens Coefficients:
c3 = +0.000000E+00
c2 = +0.000000E+00
c1 = -2.500000E-03
Offset = +0.000000E+00
Temp Sens Offset: -0.20 degrees C
CPU Firmware: 16.21
Boot Code Ver: Required: 1.13 Actual: 1.13
DEMOD #1 Ver: ad48, Type: 1f
DEMOD #2 Ver: ad48, Type: 1f
PWRTIMG Ver: 85d3, Type: 6
Board Serial Number Data:
08 00 00 02 C9 20 A7 09 CPU727-2000-00H
4D 00 00 00 D4 97 37 09 PIO727-3000-03C
>
```

Verify the information is consistent with what you know about the setup of your system. If PS0 does *not* list all your sensors, there is a problem with either the communications to the transducer or a problem with the receiver

board.

Instrument Transformation Matrix

PS3 sends information about the transducer beams. Only the *BBTalk* script file TestWH.txt runs this test. The WorkHorse uses this information in its coordinate-transformation calculations; for example, the output may look like this:

```
ps3
Beam Width: 3.7 degrees
Beam Elevation Azimuth
1 -70.14 269.72
2 -70.10 89.72
3 -69.99 0.28
4 -70.01 180.28
```

WorkHorse Test Guide
page 6 RD Instruments

```
Beam Directional Matrix (Down):
0.3399 0.0017 0.9405 0.2414
-0.3405 -0.0017 0.9403 0.2410
-0.0017 -0.3424 0.9396 -0.2411
0.0017 0.3420 0.9398 -0.2415
Instrument Transformation Matrix (Down): Q14:
1.4691 -1.4705 0.0078 -0.0067 24069 -24092 127 -109
-0.0068 0.0078 -1.4618 1.4606 -111 127 -23950 23930
0.2663 0.2657 0.2657 0.2661 4363 4354 4353 4359
1.0367 1.0350 -1.0359 -1.0374 16985 16957 -16972 -16996
Beam Angle Corrections Are Loaded.
>
```

If the WorkHorse has beam angle errors, they are reflected in the instrument transformation matrix and the Beam Directional matrix. This matrix, when multiplied by the raw beam data gives currents in the *x*, *y*, *z*, and *e* directions.

Pre-deployment Test

This diagnostic test checks the major WorkHorse modules and signal paths. Both *WinSC* and *BBTalk* run this test. For example, the output may look like this:

```
>PA
PRE-DEPLOYMENT TESTS
CPU TESTS:
RTC.....PASS
RAM.....PASS
ROM.....PASS
RECORDER TESTS:
PC Card #0.....DETECTED
Card Detect.....PASS
Communication.....PASS
DOS Structure.....PASS
Sector Test (short).....PASS
PC Card #1.....DETECTED
Card Detect.....PASS
Communication.....PASS
DOS Structure.....PASS
Sector Test (short).....PASS
DSP TESTS:
Timing RAM.....PASS
Demod RAM.....PASS
Demod REG.....PASS
FIFOs.....PASS
SYSTEM TESTS:
XILINX Interrupts... IRQ3 IRQ3 IRQ3 ...PASS
```

```
Receive Loop-Back.......................PASS
Wide Bandwidth..........................PASS
Narrow Bandwidth........................PASS
RSSI Filter.............................PASS
Transmit................................PASS
SENSOR TESTS:
H/W Operation...........................PASS
```

Display Heading, Pitch, Roll, and Orientation

The PC2 test displays heading, pitch angle, roll angle, up/down orientation and attitude temperature in a repeating loop at approximately 0.5-sec update rate. Any key pressed exits this command and returns the user to the command prompt. Both *WinSC* and *BBTalk* run this test.

```
Press any key to quit sensor display ...
Heading Pitch Roll Up/Down Attitude Temp Ambient Temp Pressure
301.01_ -7.42_ -0.73_ Up 24.35_C 22.97_C 0.0 kPa
300.87_ -7.60_ -0.95_ Up 24.36_C 22.97_C 0.0 kPa
300.95_ -7.60_ -0.99_ Up 24.37_C 22.97_C 0.0 kPa
300.71_ -7.61_ -0.96_ Up 24.37_C 22.98_C 0.0 kPa
```

Beam Continuity

The PC1 tests the beam continuity by measuring the quiescent Receiver Signal Strength Indicator (RSSI) levels. There must be a change of more than 30 counts when the transducer face is rubbed. Both *WinSC* and *BBTalk* run this test.

```
BEAM CONTINUITY TEST
When prompted to do so, vigorously rub the selected
beam's face.
If a beam does not PASS the test, send any character to
the ADCP to automatically select the next beam.
Collecting Statistical Data...
52 48 50 43
Rub Beam 1 = PASS
Rub Beam 2 = PASS
Rub Beam 3 = PASS
Rub Beam 4 = PASS
```