DELAWARE

DEPARTMENT OF NATURAL RESOURCES AND ENVIRONMENTAL CONTROL

DIVISION OF WATER

GROUNDWATER DISCHARGES SECTION

Statutory Authority

7 **Delaware Code** Chapter 60

REGULATIONS GOVERNING THE DESIGN, INSTALLATION AND OPERATION OF ON-SITE WASTEWATER TREATMENT AND DISPOSAL SYSTEMS

ADOPTED: January 4, 1985

EFFECTIVE: January 4, 1985 Sections 1.00000, 2.00000, 3.00000, 7.00000, 9.00000 and Exhibits
May 1, 1985 Section 4.00000
July 10, 1985 Sections 5.00000, 6.00000, 8.00000 and 10.00000

AMENDED: July 10, 1985
August 15, 1986
September 30, 1989
January 31, 1995
March 11, 2002
April 11, 2005
January 11, 2014

Document No. 40-08/05/09/08/01

TABLE OF CONTENTS

Chapter		Page
Foreword		7
1.0	Authority and Scope	9
2.0	Definitions	10
3.0	General Standards, Prohibitions and Provisions	26
	3.31 Small System Specific	28
	3.32 Large System Specific	31
	3.33 Property Owner Responsibilities	32
4.0	Licenses	33
	4.1 Types of Licenses	33
	4.7 Class C Requirements	34
	4.8 Class D Requirements	34
	4.9 Class E Requirements	35
	4.10 Class H Requirements	36
	4.11 Class I Requirements	36
	4.12 Responsibilities of Licensees	37
	4.13 Temporary License	40
	4.14 On-Site System Advisory Board	41
5.0	Small Systems (< 2,500 gpd)	43
	5.1 Introduction	43
	5.2 Soil Investigations	43
	5.2.1 Site Evaluation Procedures	43
	5.2.2 Soil Feasibility Study	47
	5.2.3 Observation Wells/Piezometers	49
	5.2.4 Soil Percolation Rate Determination	51
	5.2.5 Site Interpretation Advisory Council	52
	5.3 Permitting	54
	5.3.1 General Requirements	54
	5.3.2 Disposal System Sizing	55
	5.3.3 Wastewater Design Flow Rates	56
	5.3.4 Isolation Distances	57
	5.3.5 Water Conservation Devices	57
	5.3.6 Dosing and Diversion Systems	57
	5.3.7 Gravity Distribution Requirements	58
	5.3.8 Pressure Distribution Uses	59
	5.3.9 Pressure Distribution Requirements	59
	5.3.10 Diversion Boxes and Diversion Valves	60
	5.3.11 Diversion Boxes and Diversion Valves Specifications	60
	5.3.12 Conventional On-site Wastewater Treatment and	60

Disposal System Criteria
5.3.12.1 Gravity Trench and Bed 60
5.3.12.2 Low Pressure Pipe 61
5.3.12.3 Wisconsin At-Grade 62
5.3.12.4 Elevated Sand Mound 62
5.3.12.5 Pressure-Dosed 62
5.3.12.6 Sand-Lined Systems 63
5.3.12.7 Artificially Drained Systems 63
5.3.13 Building Sewers 63
5.3.14 Septic Tanks 64
5.3.15 Grease Traps 66
5.3.16 Lift Stations 67
5.3.17 Dosing Chambers 67
5.3.18 Holding Tanks 69
5.3.19 Spare Area 71
5.3.20 System Permit Applications 71
5.3.21 Application Requirements 72
5.3.26 Permit Denial 72
5.3.27 Permit Denial Review 73
5.3.28 Authorization to Use Existing System Permit 73
5.3.29 Repair and Replacement of Existing Systems 74
5.3.30 Flow Equalization Requirements 75
5.3.31 Innovative/Alternative Wastewater Treatment and Disposal Systems 76
5.3.31.3 Product Approvals 77
5.3.32 Transportation of Non-Hazardous Liquid Waste 79
5.3.32.3 Application Requirements 79
5.4 Installation Requirements 82
5.4.1 Excavation 82
5.4.2 Materials 82
5.4.3 Septic Tank Installation 84
5.4.4 Distribution Networks 84
5.4.5 Conventional Treatment and Disposal Systems 85
5.4.5.1 Gravity Trenches and Beds 85
5.4.5.2 Elevated Sand Mounds 86
5.4.5.3 Low Pressure Pipe Systems 87
5.4.5.4 Wisconsin At-Grade Systems 87
5.4.5.5 Site Restoration 87
5.4.6 Inspections 88
5.4.6.1 Construction 88
5.4.6.2 Inspection Protocols 89
5.4.6.3 Class H 90
5.4.7 Certificate of Satisfactory Completion 93
5.4.8 Abandonment of Systems 94
5.5 Operation and Maintenance 94
5.5.5 Specific Requirements 95
5.6 Waivers 96

5.6.1 Application 96
5.6.2 Formal 96
5.6.3 Rural Area 96
5.6.4 Hardship 97
5.6.5 Waiver Hearings 98

6.0 Large Systems (≥ 2,500 gpd) 99
6.1 Introduction 99
6.2 Site Characterization 99
6.2.1 Letter of Intent 99
6.2.2 Soil Investigation Report (SIR) 99
6.2.2.1 General Requirements 99
6.2.3 Hydrogeologic Suitability Report (HSR) 102
6.2.3.1 General Requirements 102
6.2.3.2 Site Specific HSR Requirements 102
6.2.3.3 On and Off-Site Wells and Surface Water Bodies 102
6.2.3.4 Hydrogeologic Framework 103
6.2.3.4.4 Wet Season Monitoring 104
6.2.3.5 Ambient Groundwater Quality 105
6.2.3.6 Groundwater Mounding Analysis (GMA) 106
6.2.3.7 Supplemental HSR Considerations 107
6.2.4 Surface Water Assessment Report (SWAR) 108
6.3 Design Parameters 108
6.3.1 Standard Requirements 108
6.3.2 System Specific Design Parameters 111
6.3.2.1 Subsurface Disposal 111
6.3.2.2 Rapid Infiltration Basins (RIB) 111
6.3.2.3 Spray Irrigation 112
6.3.2.3.1 Treatment Standards 112
6.3.2.3.2 Wastewater Effluent Standards 113
6.3.2.3.3 Public Access 113
6.3.2.3.4 Nitrogen 114
6.3.2.3.5 Ponds 115
6.3.2.3.6 Cover Crop Selection and Management 115
6.3.2.3.7 Soils 116
6.3.2.3.8 Land Limiting Constituents 116
6.3.2.3.9 Lysimeters 117
6.3.2.3.10 Buffer Requirements 117
6.3.2.3.11 Water Balance Calculations 118
6.3.2.3.12 Storage 118
6.3.2.3.13 Other System Design Considerations 118
6.3.2.3.14 Leased Agricultural Sites 121
6.4 Legal Documentation 121
6.4.1 Owner/Operator Requirements 121
6.4.2 Public Wastewater Utility Requirements 125
6.5 Large System Permitting 125
6.5.1 Large System Construction Permit Application Requirements 126

6.5.1.4 Design Engineer Report 126
6.5.1.5 Plans 129
6.5.1.6 Technical Specifications 131
6.5.2 Large System Construction Permits 131
6.5.2.1 Public Advertisement 131
6.5.2.2 Construction Permit Expiration 131
6.5.2.3 Construction Permit Extension 132
6.5.3 Large System Operation Permit 132
6.5.3.1 Application Requirements 132
6.5.3.2 Operating Requirements 133
6.5.4 Operation Permit Re-Issuance 136
6.5.4.1 Requirements 136
6.5.4.2 Application Package 136
6.5.4.3 Compliance Monitoring Report Requirements 136
6.5.4.4 Emergency Repairs 139
6.5.5 Severability 139
6.5.6 Permit Transferability 139
6.5.7 Permit Revocation 140
6.5.8 Sunset Requirement 140
6.5.9 Noncompliance Notification 140
6.5.10 Regional Facilities 140
6.5.10.1 Design 141
6.5.10.2 Required Documents for Permitting 141
6.5.10.3 Required Documents for Connecting Subdivisions 141
6.5.11 Phasing 141
6.6 Construction Requirements 142
6.7 General Operation and Maintenance Requirements 145
6.8 Monitoring Requirements 149
6.8.1 Groundwater Monitoring 149
6.8.2 Influent and Effluent Monitoring 150
6.8.3 Soils Monitoring 152
6.8.4 Lysimeter Percolate Monitoring 153
6.8.5 Monitoring Reporting 154
6.9 Annual Report 155
6.10 Temporary Holding Tank 156
6.10.1 General Permit Requirements 156
6.10.2 Regional Temporary Holding Tank 156
6.10.3 Permit Application 157
5.10.4 General Conditions 157
6.11 Distribution of Treated Wastewater 157
6.11.3 General Design Considerations 157
6.11.4 Application Requirements 158
6.11.5 Operation and Maintenance Requirements 159
6.11.6 Monitoring Requirements 159
6.11.7 Reporting 161
6.11.8 Agricultural Use 162
6.12 Fees 163

6.12.1 Permitting 163
6.12.2 Advertisement 163
6.12.3 Compliance 163
6.13 Severability 163
6.14 Wastewater Treatment Facility Closure/Abandonment 164

7.0 Sources of Information 165
7.1 Organizations 165
7.2 Technical References 165

8.0 Exhibits 166

Attachments - Guidance Documents
1 Class C Inspection Guidelines
2 Lot Clearing Guidelines
3 Shellfish Waters Guidelines and Map
4 Recycling OWTDS Soil and Stone Guidelines
5 LOWTDS Flow Chart
6 Barricading the Proposed Disposal Area
7 Guidelines for Designing Micro-irrigation “Drip” Treatment and Disposal Systems, dated 1/15/10
8 Guidelines for Designing Peat Biofilter Treatment and Disposal Systems, dated 9/1/05
9 General Lysimeter Construction and Sampling Guidelines

FOREWORD

The Delaware Department of Natural Resources and Environmental Control (the Department) finds that a substantial portion of the State's population lives where centralized water supplies or wastewater treatment services are limited. It is the intent of the Department to aid and assist the public in the installation of on-site wastewater treatment and disposal systems, where possible, by utilizing the best information, techniques and soil evaluations for the most suitable system that site and soil conditions permit.

Statewide regulations governing the installation and operation of wastewater treatment and disposal systems have existed since 1968. Inappropriate installations and poor operation and maintenance practices have resulted in treatment and disposal system malfunctions. Inadequately renovated wastewater has contaminated the State's groundwater and is presenting a threat to the public health, safety, and welfare. Corrective measures require the replacement of water supply and wastewater systems, sometimes at a very high cost, which is sometimes borne by the general public. As such the Department's regulations governing the site evaluation, siting density, installation, operation and maintenance of on-site wastewater treatment and disposal systems have been identified as requiring revisions.

Through a process that included considerable staff research, consultant studies, the development of background "working papers", interaction with public/private sector on-site wastewater industry professionals, public meetings and presentations, public workshops, a public hearing and a hearing officer's report along with draft versions of this Regulation were prepared, reviewed and revised. This final version is the result of those various activities, and incorporates, as best as possible, all valid concerns into its provisions.

They are based on the best information available and include the establishment of a process for updating this Regulation as information changes. They include what are considered to be the best engineered design standards for on-site systems, as determined by research and practical experience. These Regulations seek to require the use of on-site wastewater treatment and disposal systems and slow rate land treatment systems that will function according to their performance criteria without causing the State's groundwater resources to violate U. S. Environmental Protection Agency Drinking Water Standards on an average annual basis.

This document also provides for the planning, design, and operation of slow rate land treatment systems for wastewaters in Delaware. The term slow rate land treatment as used in these regulations refers to the advanced treatment of wastewater by irrigation onto land to support vegetative growth. These systems are designed and operated so there is no direct discharge to surface waters. The irrigated wastewater evaporates and transpires to the atmosphere or enters the groundwater through percolation. Organic constituents in the wastewater are stored in the soil or stabilized by soil bacteria. Properly designed and operated wastewater irrigation systems produce a percolate water of high quality and thus protect ground and surface water resources.

The proper siting of wastewater treatment and disposal systems is addressed by the establishment of various soil criteria and hydrogeologic criteria which lead to the selection of the most suitable on-site wastewater treatment and disposal system for local conditions. System selection and sizing are determined using the results of the site specific soil evaluations, infiltrometer tests and/or hydrogeologic suitability investigations. Soil evaluation and system selection, design, installation, operation and maintenance are required to be performed by individuals licensed under these Regulations.

Although it has not been possible to include every method of on-site treatment and disposal, the Department's policy is to encourage development of new systems, processes and techniques which may benefit significant numbers of people within Delaware. It is expected that these Regulations will be reviewed and revised periodically and that standards for future methods of wastewater treatment and disposal will be evaluated as more experience and research data become available. The Regulations contain provisions that enable that process to occur.

1.0 AUTHORITY AND SCOPE

1.1 These Regulations are adopted by the Secretary of the Department of Natural Resources and Environmental Control under and pursuant to the authority set forth in 7 **Del.C.** Ch. 60.

1.2 These Regulations shall apply to all aspects of:

1.2.1 The planning, design, construction, operation, maintenance, rehabilitation, replacement, inspection and modification of on-site wastewater treatment and disposal systems within the boundaries of the State of Delaware; and

1.2.2 The planning, design, construction and operation and maintenance of on-site wastewater holding tanks within the boundaries of the State of Delaware; and

1.2.3 The licensing of percolation testers, on-site wastewater treatment and disposal system designers, soil scientists, on-site wastewater treatment and disposal system contractors, system inspectors and liquid waste haulers within the boundaries of the State of Delaware.

1.3 These Regulations shall supersede and replace the Regulations Governing the Design, Installation, and Operation of On-Site Wastewater Treatment and Disposal Systems and the Guidance and Regulations Governing the Land Treatment of Wastes, Part II. With respect to the other provisions of the Regulations Governing the Control of Water Pollution these Regulations shall supersede such Regulations only to the extent of any inconsistency. These Regulations shall apply throughout the State of Delaware.

1.4 The Department has the authority to establish and collect fees for the defraying of expenses incurred by the Department for facilities and services needed to provide for the administration of its programs. The authority is contained within 68 **Del. Laws C.** 86 §14, which also contains the schedule of fees.

2.0 DEFINITIONS

2.1 The following words and terms, when used in this Regulation, shall have the following meaning unless the text clearly indicates otherwise:

"**Absorption facility**" means a system of open jointed or perforated piping, alternative distribution units or other seepage systems for receiving the flow from septic tanks or other treatment facilities and designed to distribute effluent for oxidation and absorption by the soil within the zone of aeration.

"**Advanced treatment unit**" means any process designed to produce an effluent of higher quality than normally achieved by secondary treatment processes or containing unit operations not normally found in secondary treatment which also incorporates nutrient removal processes that achieve PSN3 requirements.

"**Affidavit of Ownership**" means a formal sworn statement of ownership, signed by the declarant (who is called the affiant or deponent) and witnessed (as to the veracity of the affiant's signature) by a taker of oaths, such as a notary public.

"**Aggregate-free chambers**" means a buried structure used to create an enclosed unobstructed soil bottom absorption area and side-wall absorption area for infiltration and treatment of wastewater which can be used to replace the filter aggregate and distribution pipe in an absorption facility.

"**Agricultural land**" means land cultivated for the production of crops or used for raising livestock.

"**Agricultural wastes**" means wastes normally associated with the production and processing of food and fiber on farms, feedlots, ranches, ranges, and forests which may include animal manure, crop residues, and dead animals; also agricultural chemicals, fertilizers and pesticides which may find their way into surface and subsurface water.

"**Agricultural well**" means a non-potable well used for watering livestock, aquaculture, or watering household yards and gardens, or for other purposes related to farming but not for irrigating lands or crops.

"**Alternating system**" means two or more disposal fields, equal in size with dosing provided alternatively to each field.

"**Applicant**" means the owner or legally authorized agent of the owner as evidenced by sufficient written documentation who has submitted an application to the Department for review and approval.

"**Authorization to use existing system permit**" means a written document issued by the Department which states that an on-site wastewater treatment and disposal system appears adequate to serve the purpose for which a particular application is made and that the system may be placed into operation.

"**Aquifer**" means a part of a formation, a formation, or a group of formations that contains sufficient saturated permeable material to yield economically useful quantities of water to wells and springs.

"**Authorized agent**" means a person given the authority to act on the owner's behalf for filing an application with the Department either to sign on behalf of the owner or to act as the contact person to receive all correspondence.

"**Backfill**" means a soil which is clean and free of foreign debris, placed over the disposal area and fill extensions.

"**Biosolids**" means the nutrient-rich organic materials resulting from the treatment of sewage sludge: the solid, semisolid or liquid untreated residue generated during the treatment of domestic sewage in a treatment facility.

"**Blackwater**" means waste carried off by toilets, urinals, and kitchen drains.

"**BOD_5**" means biochemical oxygen demand which is the amount of oxygen required by bacteria to stabilize decomposable organic matter under aerobic conditions.

"**Building drain**" means the piping coming from inside a building that extends five (5) feet beyond the exterior walls of the building and conveys wastewater to the building sewer.

"**Building sewer**" means piping which carries wastewater from a building drain to the first component of the treatment and disposal system.

"**Capping fill gravity**" means a gravity fed on-site wastewater treatment and disposal system which maintains a minimum 36 inches of separation distance above the limiting zone where the trench or bed is installed between 12 and 23 inches into the natural soil below a soil cap of a specified depth and texture.

"**Certified service provider**" means any of the following responsible parties:

- An individual representative of a manufacturer/supplier who holds a DNREC Class E System Contractor or Class H System Inspector license; or,
- A Class E System Contractor who is certified, through DNREC approved training, on the operation and maintenance of the advanced treatment unit or system; or,
- A Class H System Inspector who has become certified through DNREC approved training on the operation and maintenance of the advanced treatment unit or system; or,
- A Homeowner who has obtained DNREC individual homeowner service provider certification and has been certified through DNREC approved training on the operation and maintenance of the advanced treatment unit or system. The DNREC homeowner certification allows the homeowner to operate and maintain their Innovative/Alternative system at their primary residence only.

"**Cesspool**" means a covered pit, with a porous lining, into which wastewater is discharged and allowed to seep or leach into the surrounding soils with or without an absorption facility. **Note:** Cesspools cannot be certified for real estate transfers.

"**Class H inspection**" means the inspection of an existing OWTDS by an individual licensed as Class H system inspector by the Department to inspect, investigate and collect data detailing the current operating condition and type of system on Department authorized forms as observed on a specific date and time.

"**Commercial facility**" means any structure or building, or any portion therefore, other than a residential dwelling.

"**Community system**" means an on-site wastewater treatment and disposal system which serves more than three (3) lots, parcels, condominium units or units of a planned unit development.

"**Completed application**" means the application form is properly completed in full, is signed by the applicant, is accompanied by all required documents, exhibits, detailed plans and specifications, and required fee.

"**Confined aquifer**" means a saturated layer of permeable geologic material bounded above and below by confining layers, and in which water pressures are greater than atmospheric.

"**Confining layer**" means a stratum of impermeable or distinctly less permeable material stratigraphically adjacent to one or more aquifers.

"**Construction permit**" means a permit issued by the Department for the construction, repair or replacement of an on-site wastewater treatment and disposal system.

"**Construction report**" means a Department approved form prepared by the contractor and submitted to the Department within 10 calendar days after the absorption facility has been completely installed.

"**Conventional on-site wastewater treatment and disposal systems (OWTDS)**" means those small systems which are referred to as; gravity, low pressure pipe, pressure-dosed, Wisconsin at-grade and elevated sand mound.

"**Crops**" means a plant growing where it is desired for man and his welfare as opposed to weeds which interfere with the activities of man, his welfare and are growing where it is undesirable.

"**Crops for direct human consumption**" means crops that are consumed by humans without processing to minimize pathogens before distribution to the consumer.

"**Declaration of Covenants & Restrictions**" means a legal obligation imposed by the seller upon the buyer of real estate.

"**Department**" means the Department of Natural Resources and Environmental Control of the State of Delaware (DNREC).

"**Developer**" means a person, persons, partnership, firm, corporation or cooperative enterprise undertaking and/or participating in the development of a subdivision, manufactured home community, or multi-unit housing project.

"**Director**" means the Director of the Division of Water for the State of Delaware or his/her authorized representative.

"**Disposal**" means the discharge, deposit, injection, dumping, spilling, leaking, or placing of wastewater, other liquid waste, or any constituent of it on or in the land, the air or any waters, including groundwater, and includes any method of utilization that involves reuse of the nutrients at greater than agronomic rates.

"**Disposal area**" means the entire area used for the absorption facility.

"**Distributed wastewater**" means treated and filtered wastewater provided for disposal, reuse or any other purpose consistent with the intent of these Regulations.

"**Distribution box**" means a box for distributing wastewater equally to separate distribution laterals of the absorption facility by means of gravity.

"**Distribution system**" means piping or other devices used in the distribution of wastewater within the absorption facility (also referred to as distribution laterals).

"**Domestic waste**" means solid waste, composed of garbage and rubbish, which normally originates in a private home or apartment house and may contain toxic or hazardous waste.

"**Dosing**" means the pumped or regulated flow of wastewater to the absorption facility.

"**Dosing chamber**" means a tank/receptacle for retaining effluent until pumped by timing and/or measured volumes to the pressurized absorption facility.

"**Down gradient**" means an area that has a lower potentiometric surface (hydraulic head) than a comparative reference point.

"**Dwelling**" means any structure or building, or any portion thereof which is used, intended, or designed to be occupied for human living purposes including, but not limited to, houses, houseboats, boathouses, mobile homes, manufactured homes, travel trailers, hotels, motels, apartments and condominiums.

"**Easement**" means an interest in land owned by another that entitles its holder to a specific limited use or enjoyment.

"**Effluent**" means the wastewater flow from a tank or treatment process.

"**Effluent filter**" means a device placed in the outlet compartment of a septic tank which conforms to ANSI/NSF Standard 46 for the purpose of removing particulate matter before the effluent enters the absorption facility.

"**Effluent line**" means the pipe beginning at the treatment unit or septic tank and terminating at the absorption facility.

"**Elevated sand mound**" means an on-site wastewater treatment and disposal system which maintains a minimum 36 inches of separation distance above the limiting zone in which wastewater is pressurized into suitable fill material constructed above existing grade.

"**Emergency permit**" means a permit allowing a repair and/or replacement of a broken system component on an emergency basis where immediate action is necessary to protect public health. Repairs/replacements of this kind are considered emergencies occurring when Department offices are closed. Repairs and/or component replacements to cesspools, seepage pits or tank(s) associated with cesspools/seepage pits are not permitted unless approved by the Department.

"**Encumbrance**" means anything non-financial that affects or limits the area available to site, design and install an OWTDS on a property such as easements, right of ways and restrictions. The Department also includes, but is not limited to, these physical encumbrances; dwellings, outbuildings, driveways, or concrete pads.

"**Engineered sandy fill**" means sand that must have a uniformity coefficient of < 5. A minimum of 95% by weight must pass through a #4 sieve and a maximum of 10% by weight through a #100 sieve.

"**Escarpment**" means any naturally occurring slope greater than 30% which extends vertically six (6) feet or more as measured from top to toe, and which is characterized by a long cliff or steep slope which separates two (2) or more comparatively level or gently sloping surfaces, and may intercept one (1) or more layers that limit soil depth.

"**Existing on-site wastewater treatment and disposal system**" means any installed on-site wastewater treatment and disposal system constructed in conformance with the rules, laws and local ordinances in effect at the time of construction or which would have conformed satisfactorily to the system design provided for in Department regulations.

"**Fill**" means soil material which has been transported to and placed over the original soil or bedrock and is characterized by a lack of distinct horizons or color patterns as found in naturally developed, undisturbed soils.

"**Filter aggregate**" means washed gravel or crushed stone ranging in size from $^{3}/_{4}$" to $2^{1}/_{2}$" in any dimension and clean and free of fine materials (dust) and meeting grading specifications in Section 5.4.2.

"**Filter fabric**" means any material approved by the Department which is permeable but does not allow soil particles to pass through for the purpose of protecting the filter aggregate or aggregate free chambers within the absorption facility.

"**Food chain crops**" means tobacco, crops grown for human consumption, and crops grown to feed animals whose products are consumed by humans.

"**Free liquids**" means liquids which readily separate from the solid portion of a waste under the following tests:

- EPA Plate Test. Place a 1 to 5 kilogram (2.2 to 11.0 lbs.) sample of waste on a level or slightly sloping plate of glass or other similarly flat and smooth solid material for at least 5 minutes. If a liquid phase separation is observed, the waste contains free liquids.
- EPA Gravity Test. The test protocol calls for a 100 ml representative sample of the waste from a container to be placed in a 400 micron conical paint filter for 5 minutes. The filter specified is a standard paint filter which is commonly available at hardware and paint stores. The filter is to be supported by a funnel on a ring stand with a beaker or cylinder below the funnel to capture any free liquid that passes through the filter. If any amount of free liquid passes through the filter, the waste is considered to hold free liquids.

"**Full depth gravity**" means a gravity fed on-site wastewater treatment and disposal system which maintains a minimum of 36 inches of separation distance above the limiting zone where the trench or bed is generally installed 24 inches into the natural soil.

"**Governmental appointee**" means any state, county, municipal employee or someone contracted by any of these agencies for the purpose of doing official business for the business aspects of the State.

"**Governmental unit**" means the state, any county, municipality, or any part thereof.

"**GPD**" means gallons per day.

"**Grade**" means the inclination or slope of a conduit, ground or plane surface.

"**Greywater**" means the untreated wastewater that has not come into contact with toilet waste. Greywater includes wastewater from bathtubs, showers, bathroom wash basins, clothes washing machines, laundry tubs and other wastewater which does not present a threat from contamination by unhealthy processing, manufacturing or operating wastes. It does not include wastewater from kitchen sinks or dishwashers.

"**Grease trap**" means a watertight tank for the collection and retention of grease which is accessible for periodic removal.

"**Groundwater**" means any water naturally found under the surface of the earth.

"**High potential for phosphorus mobility**" means an area where:

- The site's soils have a Fertility Index Value (FIV) of greater than 100 for phosphorus or a soil test value of over 100 parts per million (ppm) by the Mehlich 3 soil test; and
- The groundwater phosphorus content is above 0.034 mg/L and there is an indication that groundwater is anoxic due to low dissolved oxygen or oxidation reduction potential below 200 mV; and
- The disposal area contains soils with a seasonal high water table above 27 inches.

"**Holding tank**" means a watertight receptacle used to store wastewater prior to being removed by a licensed waste hauler.

"**Hydraulic conductivity**" means a specific mathematical coefficient (quantitative) that relates the rate of water movement to the hydraulic gradient. A term of Darcy's

law Q = KAi where K represents hydraulic conductivity and is the current standard for measuring a soils ability to transmit water.

"Hydrogeologic suitability report (HSR)" means a report that characterizes the hydrogeologic properties present on a given site through direct observations and computer modeling.

"**Impervious strata and formation**" means an underground or surface layer of soil or rock which will not allow water to pass through it at a rate permissible for subsurface disposal and having a percolation rate > 120 minutes per inch.

"**Infiltrometer**" means a device for measuring the rate of entry of liquid into soil; single or double rings that may be read by falling or constant head methods.

"**Innovative/Alternative treatment and disposal system**" means a wastewater treatment and/or disposal system not specified in these regulations which has been proven to provide at least an equivalent level of treatment as the conventional systems as defined in these regulations. Also referred to as alternative technologies.

"**Interceptor drain**" means a gravel trench excavated and installed to collect and remove groundwater. The trench is typically placed across a contour of a slight to moderate sloping area to intercept groundwater at a higher elevation than an on-site wastewater treatment and disposal system.

"**Invert**" means the floor, bottom or lowest portion of the internal cross section of a closed conduit or structure.

"**Isolation distance**" means the horizontal distance between a system component and selected site features or structures.

"**Land application**" means the placement of liquid waste or treated liquid waste within two (2) feet below the surface of land used to support vegetative growth.

"**Land treatment**" means a technology for the intimate mixing or dispersion of wastes into the upper zone of the plant-soil system with the objective of microbial stabilization, immobilization, selective dispersion, or crop recovery leading to an environmentally acceptable assimilation of the waste.

"**Large system**" means any on-site wastewater treatment and disposal system with a projected wastewater design flow rate greater than or equal to 2,500 gallons per day.

"**Lease**" means an agreement by which an owner of property (lessor) transfers the possession, control, use, or enjoyment of the property to another (lessee) for a specified term.

"**Lessee**" means a person who holds the right to possession, control, use, or enjoyment of property by means of an agreement (lease) with the property owner.

"**Lift package**" means a pre-engineered package which includes pump, filter, floats and alarm that is specifically designed to be installed in the liquid (effluent) side of a standard septic tank.

"**Lift station**" means a pre-engineered tank/receptacle package which includes pump, filter, floats and alarm or pre-engineered "lift package" inserted into the liquid (effluent) side of a standard septic tank. The lift station is designed to overcome slope differentials for pumping effluent to another system component for gravity distribution.

"**Limited public access**" means public access is limited to specific periods of time and spraying activities occur when the public is excluded from accessing the site.

"**Limiting zone**" means any horizon or condition in the soil profile or underlying strata which includes:

- The presence of seasonal or perennial saturation in some part or all of the soil matrix as evidenced by redoximorphic features or direct measurement of piezometers and/or observation wells; or
- Layers with a measured or estimated percolation rate of 120 mpi or slower; or
- Rock with open joints, fractures or solution channels, masses of loose rock fragments, or loose weathered rock, including gravel, with insufficient fine soil to fill the voids between the fragments; or
- Geologic stratum or soil zone in which the permeability of the stratum or zone effectively limits the movement of water
  - For large systems – maximum height of the projected seasonal high groundwater mound

"**Liquid waste**" means any waste which is not a solid waste as defined for the purposes of these Regulations.

"**Lot**" means a portion of a subdivision or parcel of land.

"**Low pressure pipe capping fill**" means a pressurized on-site wastewater treatment and disposal system which is installed as trenches and maintains a minimum 18 inches of separation distance above the limiting zone. Trenches are installed between 9-17 inches into natural soil below a soil cap of a specified depth and texture.

"**Low pressure pipe full depth**" means a pressurized on-site wastewater treatment and disposal system which is installed as trenches and maintains a minimum 18 inches of separation distance above the limiting zone. Trenches are installed 18 inches into natural soil.

"**Lysimeter**" means an instrument (pore-liquid sampler) for sampling the water percolating through soils that will be used to determine the nutrients and their levels dissolved in the water percolate.

"**Malfunctioning system**" means a system which is not adequately renovating or hydraulically eliminating the wastewater it is receiving as evidenced by, but not limited to, the following conditions:

- Failure of a system to accept wastewater discharge or the backup of wastewater into the structure served by the system.
- Direct discharge of wastewater to the surface of the ground, surface water, or groundwater without adequate renovation.

"**Manifold**" means a pipe with numerous branches to convey effluent between a large pipe and several smaller pipes, or to permit choice of diverting flow from one of several sources or to one of several discharge points.

"**Manufactured home**" means a home built entirely in the factory under a federal building code administered by the Department of Housing and Urban Development (HUD). Manufactured homes may be single or multi-sectioned and are transported to the site and installed.

"**Mineral soil**" means a soil that is saturated with water less than 30 days (cumulative) per year in normal years and contains less than 20% (by weight) organic carbon; or is saturated for greater than 30 days or more cumulative in normal years, and has an organic carbon content (by weight) of less than 18% if the mineral fraction contains 60% or more clay; or less than 12% if the mineral fraction contains no clay.

"**Monitor well**" means a non-potable well used primarily for collecting groundwater samples.

"**Mottling**" means a soil irregularly marked with spots of different colors that vary in number and size which may indicate seasonal or perennial saturation in some part or all of the soil matrix and geogenic in nature.

"**Non-Hazardous liquid waste**" means any industrial waste or sewage or other wastes or any combination thereof which may potentially alter the chemical, physical or biological integrity of water from its natural state. For the purpose of this regulation this includes septage, sewage, grease trap/cooking oil waste, municipal or industrial biosolids, biosolids from package treatment plants, etc.

"**New system**" means a proposed system which has not started the initial steps of the permitting process (e.g. site evaluation for small and letter of intent for large). Note: An expansion of an existing (in place) system, including any modification of treatment or disposal methodologies, is not considered a new system.

"**Observation well**" means a non-pumping, non-potable well used for measuring groundwater levels or potentiometric surface.

"**Offset**" means compensating for the loading of a pollutant of concern from a point or nonpoint source with a reduction in the loading from a different source or sources, in a manner consistent with meeting water quality standards.

"**On-site wastewater treatment and disposal system**" means conventional or innovative/alternative wastewater treatment and disposal systems installed or proposed to be installed on land of the owner or on other land to which the owner has the legal right to install the system.

"**On-site regulations**" means the Regulations Governing the Design, Installation and Operation of On-Site Wastewater Treatment and Disposal Systems.

"**On-site system advisory board (Board)**" means a panel of licensee's representing the on-site industry, asked to serve by the Secretary, on all matters pertaining to the issuance, suspension, discipline and revocation of all on-site licenses and licensees.

"**Owner**" means the person who has a vested legal or equitable title to real or personal property, including an on-site wastewater treatment and disposal system.

"**Percolation rate**" means the rate of water movement through a soil. Percolation rate is usually measured and assigned on the basis of elapsed time per unit volumetric water level drop. The most commonly used unit for expressing percolation rate is minutes per inch (mpi).

"**Performance standard nitrogen level 1 (PSN1)**" means where total nitrogen levels achieve either:

- An average annual concentration of 5 mg/L (parts per million (ppm)) total nitrogen in effluent sampled at the end-of-pipe of the advanced treatment unit; or
- A 90% reduction in effluent total nitrogen concentration when compared to the influent total nitrogen concentration; or
- An average annual concentration of 5 mg/L beneath any permitted on-site wastewater treatment and disposal system as verified by in-field monitoring provided that the design percolate concentration does not exceed 5 mg/L on an average annual basis.

"**Performance standard nitrogen level 2 (PSN2)**" means where total nitrogen levels achieve either:

- An average annual concentration of 10 mg/L (ppm) total nitrogen in effluent sampled at the end-of-pipe of the advanced treatment unit; or

- An 80% reduction in effluent total nitrogen concentration when compared to the influent total nitrogen concentration; or
- An average annual concentration of 10 mg/L beneath any permitted on-site wastewater treatment and disposal system as verified by in-field monitoring provided that the design percolate concentration does not exceed 10 mg/L on an average annual basis.

"**Performance standard nitrogen level 3 (PSN3)**" means where total nitrogen levels achieve either:

- An average annual concentration of 20 mg/L (ppm) total nitrogen in effluent sampled at the end-of-pipe of the advanced treatment unit; or
- A 50% reduction in effluent total nitrogen concentration when compared to the influent total nitrogen concentration at the end-of-pipe of the advanced treatment unit; or
- A 50% reduction in effluent total nitrogen concentration when compared to the influent total nitrogen concentration beneath any permitted on-site wastewater treatment and disposal system as verified by in-field monitoring or third party test results.

"**Performance standard phosphorus level 1 (PSP1)**" means where total phosphorus levels achieve either:

- An average annual concentration of 4 mg/L (ppm) total phosphorus in effluent sampled at the end-of-pipe of the advanced treatment unit; or
- A 75% reduction in effluent total phosphorous concentration when compared to the influent total phosphorus; or
- An average annual concentration of 4 mg/L beneath any permitted on-site wastewater treatment and disposal system as verified by in-field monitoring provided that the design percolate concentration does not exceed 4 mg/L on an annual average basis.

"**Performance standard phosphorus level 2 (PSP2)**" means where total phosphorus levels achieve:

- An average annual concentration of 8 mg/L (ppm) total phosphorus in effluent sampled at the end-of-pipe of the advanced treatment unit; or
- A 50% reduction in effluent total phosphorous concentration when compared to the influent total phosphorus; or
- An average annual concentration of 8 mg/L beneath any permitted on-site wastewater treatment and disposal system as verified by in-field monitoring provided that the design percolate concentration does not exceed 8 mg/L on an annual average basis.

"**Permeability**" means the property of a soil horizon that enables the soil to transmit gases, liquid, or other substances.

"**Permit**" means the written document approved by the Department which authorizes the installation of a system or any part thereof, which may also require operation and maintenance of the system.

"**Permittee**" means any individual, partnership, corporation, association, institution, cooperative enterprise, agency, municipality, commission, political subdivision or duly established entity to which a permit is issued.

"**Person(s)**" means any individual, trust, firm, joint stock company, federal agency, partnership, corporation (including a government corporation), association, state, municipality, commission, political subdivision of a state, any interstate body and other legal and commercial entities.

"**Piezometer**" means an alternative word for an observation well.

"**Platy structure**" means soil aggregates that are developed predominantly along the horizontal axis, laminated and flaky; commonly used to indicate compaction on many coastal plain soils.

"**Pollution or water pollution**" means any alteration of the physical, chemical or biological properties of any waters of the state, including change in temperature, taste, color, turbidity, silt or odor of the waters, or such discharge of any liquid, gaseous, solid, radioactive or other substance into any waters of the state, which will or tends to, either by itself or in connection with any other substance, create a public nuisance or which will or tends to render such waters harmful, detrimental or injurious to public health, safety or welfare, or to domestic, commercial, industrial, agricultural, recreational or other legitimate beneficial uses or to livestock, wildlife, fish or other aquatic life or the habitat thereof.

"**Potentiometric surface**" means a surface that represents the level to which water will rise in tightly cased wells.

"**Pressure-dosed capping fill**" means a pressurized on-site wastewater treatment and disposal system which maintains a minimum 36 inches of separation distance above the limiting zone where the trench or bed is installed between 12 and 23 inches into the natural soil below a soil cap of a specified depth and texture.

"**Pressure-dosed full depth**" means a pressurized on-site wastewater treatment and disposal system which maintains a minimum 36 inches of separation distance above the limiting zone where the trench or bed is installed 24 inches into the natural soil.

"**Pressurized distribution**" means a network of piping with orifices designed to evenly distribute wastewater under pressure through the entire absorption facility.

"**Primary treatment**" means a wastewater treatment process that takes place in a tank and allows those substances in wastewater that readily settle or float to be separated from the water being treated.

"**Professional engineer**" means a person registered by the Delaware Association of Professional Engineers to practice professional engineering in the State of Delaware.

"**Professional geologist**" means a person registered by the Delaware State Board of Professional Regulation to practice professional geology in the State of Delaware.

"**Professional soil scientist**" means a person registered by the ARCPACS (a federation of certifying boards in Agriculture, Biology, Earth and Environmental Sciences) to practice professional soil science in the State of Delaware.

"**Project site**" means the total area within the property lines of an individual lot or within the division lines of a parcel or subdivision.

"**Public health hazard**" means a condition whereby there are sufficient types and amounts of biological, chemical or physical, including radiological, agents relating to water or sewage which are likely to cause human illness, disorders or disability. These include, but are not limited to, pathogens, viruses, bacteria, parasites, toxic chemicals, and radioactive isotopes.

"**Public service commission**" means an agency created to regulate investor-owned public utilities. The Delaware Public Service Commission (PSC) works to ensure

safe, reliable and reasonably priced cable, electric, natural gas, wastewater, water and telecommunications services for Delaware consumers.

"Rapid infiltration basins" means earthen basins designed for a repetitive cycle of flooding, infiltration/percolation, and drying of treated wastewater.

"**Redoximorphic features**" means characteristic soil patterns formed by the reduction, translocation and oxidation of iron and manganese oxides. The occurrence of these features may be indicative of seasonal or perennial saturation in some part or the entire soil matrix.

"**Reducing condition**" means a geochemical condition where dissolved oxygen is depleted (< 1 mg/L).

"**Regeneration water**" means all water consumed in the regeneration steps: backwash, regeneration (brining), dilution (and brine displacement), and rinse. Raw water or treated water may be used for the rinse down.

"**Regional wastewater treatment and disposal facility**" means a large on-site wastewater treatment and disposal system which serves any entity within the designated service area(s) approved by the Public Service Commission.

"**Repair**" means any modification to an existing on-site wastewater treatment and disposal system necessary to fix a problem or malfunction.

"**Replacement system**" means a new on-site wastewater treatment and disposal system to replace the existing on-site wastewater treatment and disposal system.

"**Responsible party**" means the person, corporation, owner, utility or other entity that will assume full financial and operational control of the facility.

"**Sand**" means individual mineral particles in a soil that range in diameter from the upper limit of silt (0.05 millimeters to 2.0 millimeters).

"**Sand-lined system**" means a type of seepage trench or seepage bed absorption facility constructed in the sandy fill material below the natural soil surface and may require pressurization. The sandy fill material is used to replace a natural impermeable or slowly permeable soil layer or to completely remove an existing absorption facility.

"**Sandy fill**" means materials that consist of medium sand, sandy loam, loamy sand/sandy loam mixtures.

"**Scarifying**" means scraping or loosening the bottom and sidewall soil surfaces in the preparation of percolation test holes, seepage trenches, beds, or similar excavations.

"**Scum**" means a mass of sewage solids floating at the surface of effluent and buoyed up by entrained gas, grease or other substances.

"**Seasonal high water table**" means the highest zone of soil or rock that is seasonally or permanently saturated by a perched or shallow water table. A planar surface, below which all pores in rock or soil (whether primary or secondary) that is seasonally or permanently saturated.

"**Secondary treatment**" means a combination of unit processes that will consistently remove 85% or more of the organic and suspended material in domestic wastewater and produce an effluent of sufficient quality to satisfy the following requirements; monthly average effluent BOD_5 and TSS concentrations of 30 mg/L; daily maximum effluent BOD_5 and TSS concentrations of 45 mg/L.

"**Secretary**" means the Secretary of the Department of Natural Resources and Environmental Control or a duly authorized designee.

"**Seepage bed**" means an absorption facility consisting of an area from which the entire earth contents have been removed and replaced with a network of perforated pipe, filter aggregate or aggregate-free chambers and covered with suitable backfill material.

"**Seepage pit**" means a covered pit with a porous lining into which wastewater is discharged and allowed to seep or leach into the surrounding soil and is preceded by a septic tank. **Note:** seepage pits cannot be certified for real estate transfers.

"**Seepage trench**" means an absorption facility consisting of ditches with vertical sides and flat bottoms partially filled with filter aggregate and containing perforated pipe or aggregate-free chambers and covered with suitable backfill material.

"**Septage**" means the liquid and solid contents of a septic tank.

"**Septic tank**" means a watertight receptacle which receives the discharge of wastewater from a structure or part thereof and is designed and constructed so as to permit settling of solids from the liquid, digestion of the organic matter by detention, and discharge of the liquid portion into an absorption facility.

"**Sewage**" means water-carried human or animal wastes from septic tanks, water closets, residences, buildings, industrial establishments, or other places, together with such groundwater infiltration, subsurface water, admixture of industrial wastes or other wastes as may be present.

"**Sewage sludge**" means sludges which derive in whole or in part from sewage.

"**Single family dwelling**" means a residence intended for single family residential use.

"**Site evaluation**" means the practice of investigating, evaluating and reporting basic soil and site conditions which apply to the on-site wastewater treatment and disposal system type and design criteria.

"**Slope**" means the deviation of a plane surface from the horizontal. It is usually expressed as a ratio or percentage of number of units of vertical rise or fall per unit of horizontal distance.

"**Sludge**" means the accumulated semi-liquid suspension, settled solids, or dried residue of these solids that is deposited from (a) liquid waste in a municipal or industrial wastewater treatment plant, (b) surface or groundwaters treated in a water treatment plant, whether or not these solids have undergone treatment. Septage is included herein as sludge.

"**Small system**" means any on-site wastewater treatment and disposal system with a projected wastewater design flow rate < 2,500 gallons per day.

"**Soil feasibility study**" means a site/soil investigative report identifying the suitability of a parcel of land for a large, community or individual on-site wastewater treatment and disposal systems. The report includes information pertinent to the Department and other local government agencies in the determination of certain land use decisions.

"**Soil horizon**" means a layer of soil or soil material approximately parallel to the land surface and differing from adjacent genetically related layers in physical, chemical, and biological properties or characteristics such as color, structure, texture, consistence and pH.

"**Soil investigation report (SIR)"** means a report that characterizes the soils present on a given site through direct observations and analysis.

"**Soil profile**" means a vertical cross-section of a soil that shows the various soil horizons. Soil drainage or moisture status are both soil characteristics that can be inferred from the soil profile.

"**Soil structure**" means the combination or arrangement of primary soil particles into secondary compound particles or clusters, the principle forms of which are: platy (laminated); prismatic (prisms with rounded tops); blocky (angular or subangular); granular and columnar.

"**Soil texture**" means the grain sizes that comprise a soil consisting of three textural classes; sand, silt and clay. Field methods for judging the texture of a soil consist of forming a cast of soil, both dry and moist, in the hand and pressing a ball of moist soil between thumb and finger.

- The major textural classifications are observed and can be determined in the field as follows:
  - **Sand**: Individual grains can be seen and felt readily. Squeezed in the hand when dry, this soil will fall apart when the pressure is released. Squeezed when moist, it will form a cast that will hold its shape when the pressure is released, but will crumble when touched.
  - **Sandy Loam**: Consists largely of sand, but has enough silt and clay present to give it a small amount of stability. Individual sand grains can be readily seen and felt. Squeezed in the hand when dry, this soil will readily fall apart when the pressure is released. Squeezed when moist, it forms a cast that will not only hold its shape when the pressure is released, but will withstand careful handling without breaking. The stability of the moist cast differentiates this soil from sand.
  - **Loam**: Consists of an even mixture of sand and of silt and a small amount of clay. It is easily crumbled when dry and has a slightly gritty yet fairly smooth feel. It is slightly plastic. Squeezed when moist, it forms a cast that will not only hold its shape when the pressure is released, but will withstand careful handling without breaking. The stability of the moist cast differentiates this soil from sand.
  - **Silt Loam**: Consists of a moderate amount of fine grades of sand, a small amount of clay, and a large quantity of silt particles. Lumps in a dry, undisturbed state appear quite cloddy, but they can be pulverized readily; the soil then feels soft and floury. When wet, silt loam runs together in puddles. Either dry or moist, casts can be handled freely without breaking. When a ball of moist soil is pressed between thumb and finger, it will not press out into a smooth, unbroken ribbon, but will have a ribbon appearance.
  - **Clay Loam**: Consists of an even mixture of sand, silt, and clay, which breaks into clods or lumps when dry. When a ball of moist soil is pressed between the thumb and finger, it will form a thin ribbon that will readily break, barely sustaining its own weight. The moist soil is plastic and will form a cast that will withstand considerable handling.
  - **Silty Clay Loam**: Consists of a moderate amount of clay, a large amount of silt, and a small amount of sand. It breaks into moderately hard clods or lumps when dry. When moist, a thin ribbon or one eighth ($^1/_8$) inch wire can be formed between thumb and finger that will sustain its weight and will withstand gentle movement.

- **Silty Clay**: Consists of even amounts of silt and clay and very small amounts of sand. It breaks into hard clods or lumps when dry. When moist, a thin ribbon or one eighth ($^1/_8$) inch or less sized wire formed between thumb and finger withstand considerable movement and deformation.
- **Clay**: Consists of large amounts of clay and moderate to small amounts of sand. It breaks into very hard clods or lumps when dry. When moist, a thin, long ribbon or one sixteenth ($^1/_{l6}$) inch wire can be molded with ease. Fingerprints will show on the soil, and a dull to bright polish is made on the soil by a shovel.
- **Silt**: Consists largely of silt with very small amounts of clay. The soil feels very silky or floury. When pressed between thumb and finger it will readily pulverize without forming a ribbon.
- **Loamy Sand**: Is predominately composed of sand, but has enough clay so that it can be formed into a weakly developed ball with careful handling.
- **Sandy Clay Loam**: The predominant particle size found within this soil textural class is sand, although it contains relatively high levels of clay with lesser amounts of silt. When moist, it will form a thin ribbon that does not readily break.
- **Sandy Clay**: Consists of relatively even amounts of sand and clay with very small amounts of silt. When moist, a thin ribbon can readily be formed between thumb and finger without considerable deformation or movement.

- These and other soil textural characteristics are defined as shown in the United States Department of Agricultural Textural Classification Chart which is hereby adopted as part of these Regulations (see Exhibit B). This textural classification chart is based on the Standard Pipette Analysis as defined in the United States Department of Agriculture, Soil Conservation Service Soil Survey Investigations Report No. 1.
- Throughout these Regulations where soil textural classes and other terminology describing soils are utilized, definition and interpretation shall be in accordance with the Soil Survey Manual (Handbook 18), Field Book for Describing and Sampling Soils, and Field Indicators of Hydric Soils in the Mid-Atlantic States as published by either the U.S. Department of Agriculture or the U.S. Environmental Protection Agency.

"**Solid waste**" means any garbage, refuse, rubbish, and other discarded materials resulting from industrial, commercial, mining, agricultural operations and from community activities which does not contain free liquids. Containers holding free liquids shall be considered solid waste when the container is designed to hold free liquids for use other than storage (e.g. radiators, batteries, transformers) or the waste is household waste which is not sewage or septage.

"**Solum**" means the upper part of the soil profile (A, E and B horizons) above the parent material in which the processes of soil formation are active.

"**Spare area**" means an area set aside for construction of a second absorption facility with the equivalent design capacity of the operational absorption facility to be used in the event the operational absorption facility becomes inoperable.

"**Spray irrigation**" means the controlled application of treated wastewater to a vegetated soil surface.

"**Storage"** means the interim containment of liquid waste or treated liquid waste

before disposal or utilization.

"**Subdivision**" means any tract or parcel of land which has been divided into two or more lots for which development is intended.

"**Surface impoundment**" means a natural topographic depression, and/or man-made excavation, and/or diked area formed primarily of earthen materials (although it may be lined with man-made materials) or remains unlined, and which is designed to hold an accumulation of liquid wastes or wastes containing free liquids. Examples of surface impoundments are holding, storage, settling, and elevation pits, ponds, and lagoons.

"**Surface water assessment report (SWAR)**" means a report that characterizes the potential nutrient impacts of a wastewater treatment system to a site from future development through background data and computer modeling.

"**System**" means an on-site wastewater treatment and disposal system.

"**System inspector**" means a person licensed by the Department to inspect, investigate, collect data and make determinations regarding the present operational condition of an on-site wastewater treatment and disposal system.

"**System operator**" means an individual, who at a given time, through observation, interpretation or decision operates a wastewater facility or a segment of a system or facility.

"**Tertiary treatment**" means the removal of pollutants, including nitrogen and phosphorus, to meet discharge or reuse criteria with respect to specific parameters and followed by disinfection.

"**Test pit**" means an excavation used to examine a soil profile in order to assess soil permeability and depth to a seasonal high water table using soil texture, structure, and redoximorphic features as a basis for assessing site suitability.

"**Topography**" means ground surface variations or contours of the earth's surface, both natural and anthropogenic.

"**Total nitrogen**" means the sum of all the forms of nitrogen; ammonia, ammonium, nitrate, nitrite and organic nitrogen present in wastewater.

"**Total phosphorus**" means the sum of the water soluble and citrate-insoluble phosphorus present in wastewater.

"**Total suspended solids (TSS)**" means a measure of the suspended solids in wastewater, effluent, or water bodies, determined by tests for "total suspended non-filtered solids."

"**Treatment**" means a process which alters, modifies or changes the biological, physical or chemical characteristics of sludge or liquid waste.

"**Treatment works**" means any device and system used in the storage, treatment, recycling and reclamation of municipal sewage, or industrial wastes of a liquid nature, or necessary to recycle or reuse water at the most economical cost over the estimated life of the works, including intercepting sewers, outfall sewers, sewage collection systems, pumping, power and other equipment, and their appurtenances, extensions, improvements, remodeling, additions and alterations thereof; elements essential to provide a reliable recycled supply such as standby treatment units and clear well facilities and improvements to exclude or minimize inflow and infiltration.

"**Unconfined aquifer**" means an aquifer in which a relatively impermeable layer does not exist between the water table and the ground surface and in which the water surface is at atmospheric pressure.

"**Undisturbed soil**" means soil or soil profile unaltered by filling, removal, or other man-made changes with the exception of agricultural activities.

"**Unlimited public access**" means public access to the site may occur at any time.

"**Upgradient**" means an area that has a higher potentiometric surface (hydraulic head) than a comparative reference point.

"**Wastewater**" means water-carried waste from septic tanks, water closets, residences, buildings, industrial establishments, or other places, together with such groundwater infiltration, subsurface water and mixtures of industrial wastes or other wastes as may be present.

"**Wastewater treatment plant**" means a facility designed and constructed to receive, treat, or store waterborne or liquid wastes.

"**Wastewater utility**" means any person, partnership, association, corporation, joint stock company, agency or department of the State or any association of individuals engaged in the business of providing wastewater disposal and related services to the public for a fee, charge, or other remuneration in the State of Delaware.

"**Watercourse**" means any ocean, bay, lake, pond, stream, river or defined ditch that will permit drainage into any surface water body, excluding ephemeral watercourses as defined below.

- Ephemeral – A watercourse which flows briefly, only in direct response to precipitation in the immediate vicinity, and whose invert is above the seasonal high water table.

"**Water softener backwash**" means the wastewater by-product generated by the water softening process (see regeneration water).

"**Watershed**" means a region or area delineated by a topographical divide and draining ultimately to a particular watercourse.

"**Water table**" means the surface of an unconfined aquifer where the pore water pressure is equal to atmospheric pressure.

"**Waters of the state**" means public waters, including lakes, bays, sounds, ponds, impounding reservoirs, springs, wells, rivers, streams, creeks, estuaries, marshes, inlets, canals, the ocean within the territorial limits of the State, and all other bodies of surface or groundwater, natural or artificial, inland or coastal, fresh or salt, within the jurisdiction of the State of Delaware.

"**Well**" means any excavation which intersects the water table, and is installed for the purpose of obtaining geologic or hydrologic information and for locating, testing, measuring, extracting, and/or recharging water and other fluids, and where the depth is greater than the width. Such excavations may have been drilled, augered, cored, bored, driven, dug, jetted, or otherwise constructed. This definition does not include excavations for utility poles, construction pilings, building foundations, fence posts, test pits, or horizontal heat pump systems that are constructed above the water table.

"**Wisconsin at-grade**" means a pressurized on-site wastewater treatment and disposal system which maintains a minimum 24 inches of separation distance above the limiting zone placed on the natural soil below a soil cap of a specified depth and texture.

"**Zone of aeration**" means a subsurface zone containing water under pressure less than that of the atmosphere, including water held by capillary and containing air or gases generally under atmospheric pressure. This zone is limited above by the land surface and below by the surface of the zone of saturation, e.g., the water table.

3.0 GENERAL STANDARDS, PROHIBITIONS AND PROVISIONS

3.1 Each and every owner of real property is jointly and severally responsible for:

3.1.1 Disposing of wastewater in conformance with all applicable regulations; and

3.1.2 Connecting all plumbing fixtures on that property, from which wastewater is or may be discharged, to a central wastewater system or on-site wastewater treatment and disposal system approved by the Department; and

3.1.3 Maintaining, repairing, and/or replacing the system as necessary to assure proper operation of the system.

3.2 No permit may be issued by the Department under these Regulations unless the county or municipality having land use jurisdiction has first approved the activity through zoning procedures provided by law.

3.3 Any governmental unit may assume responsibility and authority for administering its own regulatory program for on-site wastewater treatment and disposal systems pursuant to 7 **Del.C.** §6003(d) if the delegated program establishes standards no less stringent than the standards established in these Regulations.

3.4 Administrative and judicial review and the enforcement under these Regulations shall be in accordance with the provisions of 7 **Del.C.** Ch. 60.

3.5 If any part of these Regulations, or the application of any part thereof, is held invalid or unconstitutional, the application of such part to other persons or circumstances, and the remainder of these Regulations, shall not be affected thereby and shall be deemed valid and effective.

3.6 These Regulations, being necessary for the health and welfare of the State and its inhabitants, shall be liberally construed in order to preserve the land, surface water and groundwater resources of the State.

3.7 At the sole discretion of the Department, if the proposed operation of a system may cause pollution of public waters or create a public health hazard, system installation or use shall not be authorized.

3.7.1 In no case shall an active OWTDS be installed over or dispose of wastewater on top of an existing OWTDS without sand-lining or properly abandoning the old system.

3.8 All wastewater shall be treated and disposed of in a manner approved by the Department.

3.9 No person shall dispose of wastewater at any location other than those authorized by the Department under applicable laws and regulations for such disposal.

3.10 Discharge of untreated or partially treated wastewater or septic tank effluent directly or indirectly onto the ground surface or into groundwater and/or surface waters of the State, unless authorized by a permit issued by the Department, constitutes a public health hazard and is prohibited.

3.11 Except where specifically allowed within these Regulations, no person shall connect a dwelling or commercial facility to a system if the total projected wastewater flow would be greater than that allowed under the original system construction permit. In no case shall more than one reduction (low flow, advanced treatment, or gravel-less chambers) be used in determining minimal absorption facility sizing requirements.

3.12 Except as provided in these Regulations, the spare area shall be kept vacant, free of site improvements, livestock, vehicular traffic (including construction trafficking) and soil modifications.

3.13 All systems shall be operated and maintained so as not to create a public health hazard or cause water pollution.

3.14 No person shall cause or allow construction or repair of a system, or any part thereof, without a permit issued by the Department. An exception may be allowed for certain emergency repairs as set forth in these Regulations.

3.15 The Department shall impose, in any permit, standards for evaluating treatment system performance and compliance with these Regulations. The standards may be in the form of limitations on flow and pollutant concentrations and/or mass loadings. The standards shall reflect the utilization of best management and operational practices.

3.16 When performance standards have not been achieved on an annual average basis after the appropriate system start-up period, as defined in the regulations and/or applicable on-site system permit, those persons may qualify to participate in a nutrient offset program subject to review and approval by the Department on a site specific basis.

3.17 In no cases will underdrains or artificial drainage be considered for the siting of any on-site wastewater treatment and disposal system.

3.18 In the event that these regulations are revised by the Department, permits may be reopened and modified accordingly after notice and opportunity for a public hearing.

3.19 The permittee shall at all times properly maintain and operate all structures, systems, and equipment for treatment, control and monitoring, which are installed or used by the permittee to achieve compliance with the permit and these Regulations.

3.20 The permittee shall take all necessary actions to eliminate and correct any adverse impact on public health or the environment resulting from permit noncompliance.

3.21 All electrical connections and components utilized in an OWTDS, must, at a minimum, comply with National and Delaware Electric Code (**Admin Code**, Title 24, §1400).

3.22 FEMA guidelines must be adhered to when siting OWTDS' in flood prone areas designated as "V" zones prior to permitting.

3.22.1 Certification by a registered professional engineer (Class C) that all new and replacement on-site wastewater treatment and disposal systems, including holding tanks, are located and designed to minimize or eliminate flood damage, infiltration of floodwaters into the tank and discharges from the system into floodwaters. New and replacement on-site wastewater treatment and disposal systems shall be located so as to minimize alterations to sand dunes which would increase potential flood damage.

3.23 Moratorium Areas

3.23.1 When the Department determines that construction of on-site wastewater treatment and disposal systems should be limited or prohibited in an area, it shall issue an order limiting or prohibiting such construction.

3.23.2 The order shall be issued only after a public hearing which shall insure that 20 days notice is given.

3.23.3 The order shall contain a specific description of the moratorium area and shall be limited to the area immediately threatened with groundwater or surface water contamination if construction in that area continues.

3.23.4 In issuing an order under this Section the Department shall consider the factors contained in 7 **Del.C.** §6001.

3.23.5 The moratorium shall be limited to a period of five (5) years after which re-establishment of the moratorium may be considered.

3.24 Whenever the preparation of reports or other documents required by these regulations involves the practice of engineering, geology or other recognized profession under Delaware law, sufficient evidence of appropriate certification or registration in accordance with 24 **Del.C.** must be submitted by the preparer.

3.24.1 In accordance with 29 **Del.C.** §§501 et seq., retention of reports or other documents may be paper and/or electronic records.

3.25 All Occupational Safety and Health Act (OSHA) regulations must be complied with during all phases of system installation and inspection. OSHA regulations can be found at www.osha.gov or by contacting the U.S. Department of Labor.

3.26 Enforcement

3.26.1 The provisions of these regulations shall be enforced by the Department as provided in 7 **Del.C.** Ch. 60. Such enforcement may include suspension or revocation of any license for cause.

3.26.2 The failure of the Department to enforce any of the provisions of these regulations shall not constitute a waiver by the Department of such provisions.

3.26.3 The Department will initially attempt to gain voluntary compliance in accordance with 7 **Del.C.** §6019.

3.27 Exhibits A through NN are incorporated into these Regulations by reference.

3.28 The Department continues to encourage development of new systems, processes, and techniques for eliminating, reusing, or recovering resources from wastewater. These techniques include, but are not limited to greywater collection and use, nutrient recovery, and source reduction of wastewater. These innovative technologies are subject to review and approval by the Department.

3.29 Number of Plan Reviews

3.29.1 The Department will review no application more than three (3) times. If after the third review the plan is not approved, the application will be denied, and the reasons for plan denial will be sent to the applicants.

3.29.2 In order for a plan to be reconsidered, the Department may, at its discretion:

3.29.2.1 Require a new application package and review fee in order to continue to review the application. The second application will be reviewed no more than three (3) additional times.

3.30 All new and replacement systems permitted within 1,000 feet of the Chesapeake Bay tidal waters, as displayed by the map in Exhibit NN, shall meet the Performance Standards for Nitrogen and Phosphorus as defined in these Regulations. Small systems use PSN3 and large systems see Exhibit MM. This requirement shall become effective one (1) year from the date of promulgation of these Regulations.

3.31 General Standards, Prohibitions and Provisions for small systems (< 2,500 gpd) only

3.31.1 No person shall construct, install, modify, rehabilitate, or replace an on-site wastewater treatment and disposal system or construct or place any dwelling, building, mobile home, manufactured home or other structure capable of discharging wastewater on-site unless such person has a valid permit issued by the Department pursuant to these Regulations.

3.31.2 Each system shall have adequate capacity to properly treat and dispose of the maximum projected daily wastewater flow. The projected quantity of wastewater must be determined from Exhibit D. Other projected wastewater quantities may be approved by the Department.

3.31.3 A recorded utility easement is required whenever a system crosses a property line separating property under different ownership. The easement must accommodate that part of the system, including setbacks, which lies beyond the property line, and must allow entry to install, maintain and repair the system.

3.31.4 No cooling water, air conditioning water, groundwater, oil, water softener backwash (regeneration water) or roof drainage shall be discharged into any system without specific authorization of the Department.

3.31.5 If a site has received an approved site evaluation and is free of encumbrances which could prevent the installation or operation of the system from being in conformance with these Regulations then a permit may be issued.

3.31.6 Whenever real property is recorded as two separate lots under common ownership and an on-site wastewater treatment and disposal system crosses the common boundary of the recorded lots, the owner shall execute and record, in the appropriate county office of Recorder of Deeds, an affidavit which notifies prospective purchasers of this fact on a form approved by the Department.

3.31.7 No person shall transfer any portion of real property if the transfer would create a lot boundary which would cross an existing system or any part thereof including required setbacks and isolation distances unless a utility easement approved by the Department is granted to the owner of the existing system and recorded in the appropriate county office of Recorder of Deeds.

3.31.8 No person shall transfer any portion of real property after the issuance of a permit pursuant to these Regulations if the transfer would result in the use of the permitted on-site system on a lot which does not comply with these Regulations and the terms of the permit, including but not limited to density, set back and isolation distance requirements.

3.31.9 A central wastewater system shall be deemed <u>physically</u> available if its nearest connection point from the property line or boundary to be served is:

3.31.9.1 For all single family dwellings or establishments within 200 feet;

3.31.9.2 For a proposed subdivision or group of two (2) to five (5) single family dwellings not further than 200 feet multiplied by the number of dwellings or dwelling equivalents.

3.31.9.3 For proposed subdivision or other developments with more than five (5) single family dwellings, or equivalents, the determination of central wastewater availability shall be at the sole discretion of the Department.

However, a central wastewater system shall not be considered available by the Department if topographic or manmade features make connection impossible or a waiver is obtained from the municipality or governmental authority.

3.31.10 A central wastewater system shall be deemed legally available if the system is not under a Department connection permit moratorium and the wastewater system owner is willing or obligated to provide sewer service.

3.31.11 When a central wastewater system is deemed both physically and legally available, as outlined in Sections 3.31.9 and 3.31.10, the connection must occur within a timeframe as set forth by the wastewater system owner. The existing system must be abandoned in accordance with Section 5.4.8.

3.31.12 All cesspools and seepage pits are prohibited and when found must be replaced within one (1) year in accordance with these regulations.

3.31.13 For all properties utilizing an OWTDS that are sold or otherwise transferred to other ownership, the persons must have the system pumped out and inspected by a Class F and Class H licensee, respectively, prior to completion of the sale. An extension will be given to sheriff sales, auctions, short sales and cash sales for a period not to exceed 90 calendar days from date of sale. All inspections of on-site

wastewater treatment and disposal systems shall be submitted to the Department on forms approved by the Department (see Exhibit A). These forms shall be submitted within 72 hours of inspection completion.

3.31.13.1 For transfers of new property, the certificate of completion will suffice if issued within the previous 24 months, or;

3.31.13.2 If an inspection has occurred within the previous 36 months and the property owner can provide proof of the pump out and inspection and the system is not a cesspool or seepage pit, then the inspections referred to in Section 3.31.13 will suffice, or;

3.31.13.3 If the owner of an individual OWTDS provides proof of a licensed operator or has a service contract with a certified service provider then the requirements referred to in Section 3.31.13 have been met.

3.31.14 Timers or other electrical on/off delay devices shall be installed on all pressurized systems to ensure dosing frequencies and volumes. Appliance timers are not acceptable.

3.31.15 Siting Density

3.31.15.1 The following maximum siting densities shall be maintained:

3.31.15.1.1 For residential dwellings, the maximum siting density shall be one (1) dwelling unit per one half ($^1/_2$) acre.

3.31.15.1.1.1 For single family residences, only the area within the property lines of the lot shall be considered.

3.31.15.1.1.2 For multiple family dwellings or where more than one (1) dwelling is to be served by an on-site wastewater treatment and disposal system, the maximum siting density shall be based on the net pervious area (e.g., unpaved, without structures) available for groundwater recharge after total project completion. The following criteria shall be utilized in determining the maximum siting densities:

3.31.15.1.1.2.1 For projects utilizing only a septic tank for treatment prior to discharge to the absorption facility, the maximum siting density shall be one (1) dwelling unit per one half ($^1/_2$) acre of pervious area.

3.31.15.1.2 For commercial facilities the maximum siting density shall be established by dividing the projected design flow by 500 gallons per day per one half ($^1/_2$) acre and shall be based on the net pervious area (e.g., unpaved, without structures) available for groundwater recharge after total project completion. Campgrounds intended for overnight or transient use are evaluated as commercial facilities as opposed to manufactured home communities, which are evaluated as single family residential facilities.

3.31.15.1.3 In establishing maximum siting densities the Department may consider impervious areas where it can be demonstrated that through the establishment of an acceptable stormwater management plan, all runoff will be recharged to the groundwater of the State within the boundaries of the project site. Stormwater management plans shall be based upon the sediment and stormwater regulations.

3.31.15.2 If the deed or instrument, under which an owner acquired title to a lot or parcel, was of record prior to April 8, 1984 and if such lot or parcel does not conform to the requirements of Section 3.31.15.1.1, then the Department may approve a feasibility study and/or issue a construction permit for an on-site wastewater

treatment and disposal system. This system is to serve a single family dwelling or for multiple systems to serve dwellings to be situated within an area which has been given final site plan approval prior to April 8, 1984 for single or multi-family dwellings provided that:

3.31.15.2.1 The number of dwelling units per net pervious area (e.g., unpaved, without structures) does not increase from those approved prior to April 8, 1984 by the local governmental unit having jurisdiction; and

3.31.15.2.2 At the time the permit is issued or feasibility study is approved, the lot or parcel complies with the requirements of Section 3.0 through Section 6.0 of these Regulations.

When it may be necessary to increase the net pervious area or reduce the number of dwelling units within a lot or parcel and thus create a new date of recordation or final site plan approval, the Department shall utilize the previous date of recordation or approval in determining conformance with these Regulations. The owner shall provide, prior to any action by the Department, all documentation determined by the Department to be necessary in establishing conformance with this Section.

3.31.16 All new and replacement small systems requiring advanced treatment units must adhere to the performance standard nitrogen level 3 (PSN3). These performance standards shall become effective one (1) year from date of regulation promulgation.

3.32 General Standards, Prohibitions and Provisions for large systems (≥ 2,500 gpd) only

3.32.1 Whenever the preparation of reports or other documents required by these regulations involves the practice of engineering, geology or other recognized licensed profession under Delaware law, sufficient evidence of appropriate certification or registration in accordance with 24 **Del.C.** shall be dated and bear the signature and seal of the licensee(s) who prepared or approved them.

3.32.2 For large systems which serve communities that experience a significant variation in flow on an annual basis, the permittee shall provide the Department with specific criteria in the permit for taking certain treatment units out of service during periods of low flow. The criteria will establish procedures for winterization, restart and the minimum levels of treatment which must be provided at all times. In no event shall it be less than the level of treatment provided by a conventional on-site wastewater treatment and disposal system.

3.32.3 Unless otherwise required by a permit the permittee and operator, if applicable, must coordinate with the Department for all annual large system inspections and applicable fees.

3.32.4 The basic performance criteria for a large system is the system does not present a public health problem.

3.32.5 The permittee shall furnish to the Department within a specified period of time, any information including copies of records, which may be requested by the Department to determine whether cause exists for modifying, revoking, reissuing, or terminating the permit, or to determine compliance with the permit and these Regulations.

3.32.6 The permittee shall allow the Department entry and access, consistent with 7 **Del.C.** Ch. 60, to:

3.32.6.1 Enter the permitted facility.

3.32.6.2 Inspect any records that must be kept under the conditions of the permit.

3.32.6.3 Inspect any facility, equipment, practice, or operation permitted or required by the permit.

3.32.6.4 Sample or monitor for the purpose of assuring permit compliance of any substance or any parameter at the facility.

3.32.6.5 The permittee shall report to the Department under the circumstances and in the manner specified in this Section:

3.32.6.5.1 In writing 30 days before any planned physical alteration or addition to the permitted facility or activity if that alteration or addition would result in any significant change in information that was submitted during the permit application process.

3.32.6.5.2 In writing 30 days before any anticipated change which would result in noncompliance with any permit condition or these regulations.

3.32.6.5.3 Orally within 24 hours from the time the permittee became aware of any noncompliance which may endanger the public health or the environment at telephone numbers provided in the permit by the Department.

3.32.6.5.4 In writing as soon as possible but within five (5) days of the date the permittee knows or should know of any noncompliance unless extended by the Department. This report shall contain:

3.32.6.5.4.1 A description of the noncompliance and its cause;

3.32.6.5.4.2 The period of noncompliance including to the extent possible, times and dates and, if the noncompliance has not been corrected, the anticipated time it is expected to continue; and

3.32.6.5.4.3 Steps taken or planned to reduce or eliminate reoccurrence of the noncompliance.

3.32.6.5.5 In writing as soon as possible after the permittee becomes aware of relevant facts not submitted or incorrect information submitted, in a permit application or any report to the Department. Those facts or the correct information shall be included as a part of this report.

3.33 Property owner's responsibilities shall:

3.33.1 Ensure septic tank risers, distribution box risers and dosing chamber/lift station risers, if applicable, remain above grade after final grading of property;

3.33.2 Maintain the on-site wastewater treatment and disposal system or any component thereof in accordance with these regulations and in compliance with all applicable OWTDS permit conditions; and

3.33.3 Hire an appropriately licensed Class E system contractor to repair/replace any components of the OWTDS.

4.0 LICENSES

4.1 The Department shall administer a program for the licensing of percolation testers, system designers, soil scientists/site evaluators, system contractors, liquid waste haulers, system inspectors and construction inspectors. The licensing program shall provide the issuance of licenses as follows;

4.1.1 Class A - Percolation Tester: The Class A license authorizes the performance of percolation tests and other types of infiltrometer testing.

4.1.2 Class B - Designer: The Class B license authorizes the design of conventional on-site wastewater treatment and disposal systems which utilize gravity distribution systems for seepage beds and seepage trenches and lift stations as provided for in these Regulations.

4.1.3 Class C - Designer: The Class C license authorizes the design of conventional and innovative/alternative on-site wastewater treatment and disposal systems and all pressure distribution systems.

4.1.4 Class D – Soil Scientist/Site Evaluator: The Class D license authorizes the performance of individual soil evaluations, soil investigation reports, soil feasibility studies, percolation and/or permeability tests or hydraulic conductivity tests.

4.1.5 Class E - System Contractor: The Class E license authorizes the construction, repair and installation of on-site wastewater treatment and disposal systems.

4.1.6 Class F - Liquid Waste Hauler: The Class F license authorizes the removal, transportation or disposal of the solid and liquid contents of septic tanks, cesspools, grease traps, seepage pits, holding tanks, portable toilets or other wastewater treatment or disposal facilities as specified and required under these Regulations.

4.1.7 Class H - System Inspector: The Class H license authorizes the inspection, investigation and data collection to make determinations regarding the present operational condition of on-site wastewater treatment and disposal systems.

4.1.8 Class I – Construction Inspector: The Class I license authorizes the inspection of all new, replacement and repairs of small gravity on-site wastewater treatment and disposal systems, gravity on-site system component replacements and cover inspections for above grade gravity on-site wastewater treatment and disposal systems.

4.2 It shall be necessary to have the Class A, Class B, Class C, Class D, Class E, Class F, Class H and/or Class I licenses in order to engage in the specified activities under Section 4.1 of these Regulations.

4.3 Any person seeking a license under this Section shall submit a complete application to the Department, on a standard form provided by the Department, references and pay the non-refundable application fee.

4.4 On-Site System Advisory Board (Board) approval to take an exam is valid for six (6) months from the date of the approval. If the applicant has not taken the exam within that time frame, they must re-apply with a new application, references and fee.

4.5 All applicants for a Class A, B, C, D, E, F, H or I license will be required to pass an examination prepared and administered by the Department to test the competency and knowledge of the applicant regarding pertinent subject matter and the application and use of these Regulations.

4.6 In the event an applicant fails to receive a passing grade on the examination, he/she shall be so notified by the Board within 30 days. The applicant may re-apply for a

subsequent examination only after completion of a training course approved by the Board. The examination may be taken no more than twice in a 12 month time period.

4.7 With respect to Class C licenses the following shall constitute the Department's requirements:

4.7.1 Registration as a Professional Engineer with the Delaware Association of Professional Engineers; and

4.7.2 A complete qualifications statement on approved Department forms which verifies the individual's knowledge and competency in the field of on-site wastewater treatment and disposal system engineering and design; and

4.7.3. Pass an examination prepared and administered by the Department.

4.8 With respect to Class D licenses the following shall constitute the Department's requirements for each tiered classification.

4.8.1 Class D.1 is licensed to perform individual site evaluations for both new construction and replacement systems. To qualify for a Class D.1 an individual must have:

4.8.1.1 A completed qualifications statement on approved Department forms which verifies the individual's knowledge and competency in the fields of soil science/classification and site evaluations for on-site wastewater treatment and disposal systems; and one of the following (4.8.1.2, 4.8.1.3 or 4.8.1.4)

4.8.1.2 Six (6) years of professional experience in soil classification, mapping and interpretation under the supervision of a ARCPACS Certified Professional Soil Scientist or Class D Soil Scientist and nine (9) semester hours in soil science and six (6) semester hours in geological sciences from accredited college or university; or

4.8.1.3 Four (4) years of professional experience in soil classification, mapping and interpretation under the supervision of a ARCPACS Certified Professional Soil Scientist or Class D Soil Scientist and an undergraduate degree from an accredited college or university with nine (9) semester hours in soil science and six (6) semester hours in geological sciences; or

4.8.1.4 Two (2) years of professional experience in soil classification, mapping and interpretation under the supervision of a ARCPACS Certified Professional Soil Scientist or Class D Soil Scientist and a graduate degree from an accredited college or university with 30 semester hours in biological, physical and earth sciences and 15 semester hours in soil science; and

4.8.1.5 Pass a written examination administered by the Department to test the competency and knowledge of the applicant regarding site evaluations and pertinent information contained within the regulations as it relates to siting OWTDS; and one of the following (4.8.1.6 or 4.8.1.7)

4.8.1.6 Registration as a Professional Soil Scientist with the Federation of Certifying Boards in Agriculture, Biology, Earth and Environmental Sciences (ARCPACS) with demonstrated competence with coastal plain soils; or

4.8.1.7 Pass a field practicum prepared and administered by the Site Interpretations Advisory Council and/or the soil scientists on the Board. The field practicum shall assess whether competency exists for evaluating soils specific to Delaware.

4.8.2 Class D.2 is licensed to perform individual site evaluations for new and replacement systems, soil feasibility studies, and soils reconnaissance investigations. To qualify for a Class D.2 an individual must have:

4.8.2.1 Four (4) years of full-time experience as a Class D.1 or two (2) years of experience as a Class D.1 and certification as a Certified Professional Soil Scientist as outlined in Section 4.8.1.6.

4.8.2.2 A completed qualifications statement on approved Department forms which verifies the individual's experience as a Class D.1 and/or professional certification.

4.8.3 Class D.3 is licensed to perform all soils work licensed under Sections 4.8.1 and 4.8.2 plus detailed soil investigation reports (SIR) associated with LOWTDS. To qualify for a Class D.3 an individual must have:

4.8.3.1 Two (2) years of full-time experience as a Class D.2 and certification as a Certified Professional Soil Scientist.

4.8.3.2 A completed qualifications statement on approved Department forms which verifies the individual's experience as a Class D.2 and/or professional certification.

4.8.4 To progress from one tier to the next tier the Class D licensee must:

4.8.4.1 Have served the required amount of time within the previous tier as specified in 4.8.2.1 or 4.8.3.1.

4.8.4.2 Have obtained the required certifications as specified in 4.8.2.1 or 4.8.3.1.

4.8.4.3 Complete a qualifications statement on approved Department forms which verifies the individuals experience at the current tier and request for consideration for approval to go to the next tier.

4.9 With respect to Class E licenses the following shall constitute the Department's requirements for each tiered classification:

4.9.1 E.1 is licensed to install all conventional on-site wastewater treatment and disposal systems outlined in these Regulations. To qualify for a Class E.1 an individual must have:

4.9.1.1 A completed qualifications statement, on approved Department forms, which verifies the individual's knowledge and competency of the application and requirements of these Regulations.

4.9.1.2 A minimum of two (2) years of experience under the guidance of an experienced supervisor in the construction of on-site wastewater treatment and disposal systems or Class E system contractor. For purposes of these regulations, two (2) years of experience shall be interpreted as full-time employment for a period consisting of two (2) years with proof in writing, from a currently licensed Class E system contractor or experienced supervisor.

4.9.1.3 Proof of attendance at training class/certification in basic electricity; and

4.9.1.4 Passed a written examination administered by the Department to test the knowledge and competency of these regulations. Upon passing the written examination the applicant may be awarded a Class E.1 license.

4.9.1.5 The first six (6) installations must be supervised by the Department.

4.9.2 Class E.2 is licensed to install any conventional OWTDS plus Innovative/Alternative systems. To qualify for a Class E.2 an individual must:

4.9.2.1 Have one (1) year of full time experience installing conventional OWTDS (as a Class E.1).

4.9.2.2 Completion of a qualifications statement on approved Department forms.

4.9.2.3 All installations of Innovative/Alternative systems must be under the supervision of the respective manufacturer representative until such time that a written certification has been obtained from the manufacturer representative and submitted to the Department.

4.9.3 Class E.3 is licensed to install any system subject to permitting under these Regulations including conventional OWTDS, Innovative/Alternative OWTDS, and large systems, excluding RIBs and spray irrigation. To qualify for a Class E.3 an individual must:

4.9.3.1 Meet all licensing requirements of the E.1 and E.2.

4.9.3.2 Have three (3) years of full time experience as a Class E.2 in the on-site industry installing on-site wastewater treatment and disposal systems and meeting manufacturer's certification for proper installation of the system type.

4.9.3.3 Completion of a qualifications statement on approved Department forms.

4.9.4 Class E.4 is licensed to install RIBs and spray irrigation systems only. To qualify for the Class E.4 an individual must:

4.9.4.1 Have three (3) years of experience installing these types of systems.

4.9.4.2 Completion of a qualifications statement on approved Department forms.

4.9.4.3 Present an overview of project construction review procedures including the roles of the design engineer, owner and any third party construction review organizations. The Department will utilize this overview as the written examination.

4.9.5 To progress from one tier to the next tier, except the E.4, the Class E licensee must:

4.9.5.1 Have served the required amount of time within the previous tier as specified in 4.9.2.1 or 4.9.3.2.

4.9.5.2 Complete a qualifications statement on approved Department forms which verifies the individuals experience at the current tier and request for consideration for approval to go to the next tier.

4.10 With respect to Class H licenses the following shall constitute the Department's requirements:

4.10.1 A completed qualifications statement, on approved Department forms, which verifies the individual's knowledge and competency.

4.10.2 Furnish certification of training completed under the National Association of Waste Transporters (NAWT) certification, Pennsylvania Septage Management Association (PSMA) certification, Delaware Technical & Community College certification program, or as approved by the Board.

4.10.3 Pass a written examination administered by the Department to test the knowledge and competency of the Regulations.

4.10.4 The first three (3) inspections must be supervised by the Department.

4.11 With respect to Class I licenses the following shall constitute the Department's requirements:

4.11.1 A completed qualifications statement, on approved Department forms, which verifies the individual's knowledge and competency of the requirements of these Regulations.

4.11.2 Possess, with a minimum of three (3) years of experience, either a Class B or C license.

4.11.3 Furnish certification of required training completed under the Delaware Technical & Community College training program or as approved by the Board.

4.11.4 Not inspect any system which the licensee has installed as a Class E system contractor or any Class E system contractor working within the same company as the Class I construction inspector.

4.11.5 The I license will become effective two (2) calendar years from date of promulgation of these regulations.

4.12 Responsibilities of Licensees

4.12.1 All Class B & C licensee's must visit the site to verify site conditions as reported in the site evaluation prior to permit application completion and submittal.

4.12.2 All Class C licensed designers will perform all inspections, to include final cover inspections, on every system they design throughout the systems construction. All construction inspections of on-site wastewater treatment and disposal systems shall be submitted to the Department on forms approved by the Department. These forms shall be submitted to the Department within 72 hours of inspection completion.

4.12.3 All Class D licensed soil scientists/site evaluators:

4.12.3.1 The Department may require the Class D soil scientist/site evaluator to notify the Department orally or in writing at least 36 hours, excluding Saturdays, Sundays and state holidays, prior to conducting the site evaluation.

4.12.3.2 All soil borings must extend to a depth of 72 inches or to the limiting zone if it occurs between 60 inches and 72 inches.

4.12.4 All Class A, B, C, D, E, F, H and I licensees are responsible for correct and complete information submitted to the Department as it pertains to current Regulations.

4.12.5 All Class E licensed system contractors shall:

4.12.5.1 Initiate work only on systems for which a construction permit has been granted.

4.12.5.2 Comply with all applicable regulations and requirements.

4.12.5.3 Be responsible for the work carried out by their employees and on site during all system inspections.

4.12.5.4 Submit to the Department within 10 days of completion of a system, a Construction Report on forms provided by the Department, signed by the licensed Class E system contractor.

4.12.5.5 Notify the Department 24 hours prior to construction start up to receive an authorization number. This authorization number will expire after 14 calendar days. Upon issuance of Class E license, system contractors must notify the Department 48 hours prior to initial six (6) construction start ups to receive an authorization number.

4.12.5.6 Be the sole contact person to the Department regarding inspection call-ins, consequential changes or problems. An individual employed by the licensee may be the contact person for inspection call-ins provided that person has been designated as a contact person in writing to the Department by the licensee.

4.12.6 Class F licensed liquid waste haulers

4.12.6.1 General Requirements

4.12.6.1.1 All Class F licensees shall:

4.12.6.1.1.1 Operate under a valid State of Delaware Non-Hazardous Liquid Waste Transporters Permit (see Section 5.3.32).

4.12.6.1.1.2 Be knowledgeable of the Non-Hazardous Liquid Transporters Permitee's Plan for the Prevention, Control and Clean-up of Accidental Discharges. A copy of the Plan is to be maintained on file with the Department.

4.12.6.1.1.3 Operate under a $5,000 performance bond, or other form of security, is maintained on file with the Department for the duration of licensing.

4.12.6.1.1.4 Keep a copy of their Class F license identification card available for verification while performing any Class F license related work.

4.12.6.1.1.5 Enter into a "Sewage Holding Tank Maintenance Contract" with the property owner prior to pumping out holding tanks. A copy of the contract document must be submitted to the Department within 15 days of signing the contract.

4.12.6.1.1.6 Enter into a "Grease Trap Maintenance Contract" with the property owner prior to pumping out grease traps. A copy of the contract document must be submitted to the Department within 15 days of signing the contract. Class F licensees may not enter into a "Grease Trap Maintenance Contract" unless the Class F licensee has an approved facility to dispose of grease trap waste identified in the Non-Hazardous Liquid Waste Transporters Permit that he/she is operating under.

4.12.6.1.1.7 Not co-mingle septage and grease trap waste, unless specifically approved, in writing, by the facility(ies) that will be receiving the grease trap waste.

4.12.6.2 Safety

4.12.6.2.1 At all times, the technician's personal safety, as well as protection of the environment and the customer's property, shall receive the highest priority.

4.12.6.2.2 Generally, septic tanks should not be entered because they are a hazardous environment. If entry is required, appropriate confined space entry procedures consistent with OSHA requirements should be employed.

4.12.6.3 Accessing Tanks

4.12.6.3.1 Class F licensees are prohibited from pumping out a septic tank, cesspool, seepage pit, holding tank, or grease trap through inspection ports, clean outs, wyes, or other orifices not specifically designed for tank pump-outs.

4.12.6.3.2 Septic tanks shall only be pumped from/through the appropriate manhole/access port of each tank or tank compartment.

4.12.6.3.3 If the customer insists upon the tank being cleaned through any opening other than the access manhole, the Class F licensee must obtain a waiver and the customer must sign the waiver acknowledging the fact that he/she has been informed of the proper procedure and the reasons associated with the procedure. A copy of the waiver must be submitted to the Groundwater Discharges Section, 89 Kings Highway, Dover, DE 19901 within 30 days.

4.12.6.3.4 No liquids or solids are to be discharged into/through the outlet pipe.

4.12.6.4 Septic Tank Cleaning

4.12.6.4.1 The liquid, solid, and semi-solid material in a septic tank shall be removed by a vacuum or centrifugal pump fitted with a hose that delivers the material to a truck-mounted, sealed tank.

4.12.6.4.2 Cleaning procedures shall include agitating all solids, but only after lowering the liquid level to 12 inches below the outlet. This is necessary to ensure no solids are allowed to escape the treatment tank. Agitation methods vary, and may include alternate pumping and back flushing, forcing air into the tank, or mechanical stirring.

4.12.6.4.3 When back flushing or injecting air, care shall be taken not to fill/refill the tank to a level greater than 12 inches below the elevation of the outlet pipe.

4.12.6.4.4 When pumping out a septic tank, cesspool, dosing chamber, or seepage pit, the entire contents of all compartments of the tank(s) shall be removed, including all solids, scum, and liquids.

4.12.6.4.5 Class F licensees shall inspect the dosing chamber of any engineered on-site system being pumped out. If solids are evident in the dosing chamber, the Class F licensee shall pump the dosing chamber.

4.12.6.5 Standard Services

4.12.6.5.1 Every septic tank pump-out shall include a visual inspection of the interior of the tank. The inspection shall include a determination regarding the presence of baffles and their condition, as well as the physical condition of the treatment tank.

4.12.6.5.2 Observations of any unusual conditions such as high or low liquid level, run-back from the absorption facility, defective or broken components, lush vegetation and/or sewage overflows shall be reported to the customer.

4.12.6.5.3 During system maintenance it is advisable to observe sewage flows from the building into the tank. Corrective action for any observed obstructions should be recommended.

4.12.6.5.4 Any unsatisfactory conditions shall be noted on the sales slip or receipt.

4.12.6.5.5 Operating OWTDS' should be pumped out at least once every three (3) years. This recommended maintenance frequency should be communicated to the customer at the time of service.

4.12.6.5.6 Any existing observation ports should be capped off.

4.12.6.5.7 Class F licensees may only repair, add or replace septic tank and/or holding tank risers, baffles, lids, distribution box lids and effluent filters.

4.12.6.6 Additives

3.12.6.6.1 The use of additives in OWTDS' is prohibited.

4.12.6.7 Reports

4.12.6.7.1 The Class F licensee shall submit quarterly reports documenting the location, the 911 mailing address, and amount of septage removed in total gallons. This requirement becomes effective one (1) year after promulgation of these Regulations.

4.12.6.8 Transportation of source separated materials as defined in Section 3.0 of the Regulations Governing Solid Waste, for reuse or recycling, does not

require a Non-Hazardous Liquid Waste Haulers Permit, only if the material remains separated throughout the transport routes and are not recombined.

4.12.7 Class H licensed system inspectors

4.12.7.1 All inspections of on-site wastewater treatment and disposal systems shall be submitted to the Department on forms approved by the Department (see Exhibit A). These forms shall be submitted within 72 hours of inspection completion.

4.12.7.2 The Department may require any Class H system inspector to notify the Department orally or in writing at least 48 hours, excluding Saturdays, Sundays and state holidays, prior to conducting a system inspection.

4.12.7.3 All Class H licensed system inspectors shall:

4.12.7.3.1 Comply with all applicable regulations and requirements.

4.12.7.3.2 Be responsible for the work carried out by their employees and on-site during all inspections.

4.12.7.3.3 Ensure all wastewater and septage is removed from the appropriate tanks by a Class F liquid waste hauler in accordance with the regulations.

4.12.7.3.4 Repair, add or replace septic tank and/or holding tank risers, baffles, lids, distribution box lids and effluent filters.

4.12.7.3.5 Notify the Department, when newly licensed, at least 48 hours prior to the initial three (3) system inspections performed.

4.12.7.3.6 Submit additional information and/or paperwork as required by the Department to satisfy these Regulations.

4.12.8 Class I licensed construction inspectors

4.12.8.1 All construction inspections of on-site wastewater treatment and disposal systems shall be submitted to the Department on forms approved by the Department. These forms shall be submitted to the Department within 72 hours of inspection completion.

4.12.8.2 Notify the Department orally or in writing at least 24 hours, excluding Saturdays, Sundays and state holidays, prior to conducting a construction inspection.

4.12.8.3 All Class I licensed construction inspectors shall:

4.12.8.3.1 Comply with all applicable regulations, requirements and guidelines.

4.12.8.3.2 Be responsible for the work carried out by their employees and be on-site during all inspections.

4.12.8.4 Notify the Department at least 36 hours prior to the initial six (6) system inspections for newly licensed construction inspectors.

4.12.8.5 The Department may require any Class I system inspector to notify the Department orally or in writing at least 36 hours, excluding Saturdays, Sundays and state holidays, prior to conducting a system inspection.

4.12.9 Any person who engages in the practice of professional engineering or professional geology in the specified activities under this Section shall be duly registered in conformance with the requirements of the laws of the State of Delaware.

4.13 The Department may issue temporary Class A, B, or E licenses to property owners who wish to conduct their own percolation testing, gravity system design, or system installation on their own property and for their own use. Certification of the intended use

will be required. The applicant shall submit an application on Department forms along with any required fee and shall demonstrate their competency in those fields by successfully completing a test conducted by the Department. The term of the temporary Class A, B, or E license shall expire upon permit expiration. There will not be a temporary Class E license granted for innovative/alternative system installations.

4.14 In exercising exclusive licensing authority under this Section, the Department shall seek the views of the On-Site Systems Advisory Board (Board) regarding licensing matters. The Board shall consist of 10 members designated at the discretion of the Secretary. The Board shall, if possible, be comprised as follows: one (1) member who is a Class B designer, one (1) member who is a Class C designer (Professional Engineer), one (1) member who is a Professional Geologist, one (1) member who is a representative of the USDA, one (1) member who is a Class D soil scientist, one (1) member who is a Class E system contractor, one (1) member who is a Class F liquid waste hauler, one (1) member who is a Class H system inspector, one (1) member who is a Class I construction inspector and one (1) member representing of the Department. Effective with the promulgation of this amended Regulation, the current Board members, with their designated term expiration dates, shall be posted on the DNREC web site. No later than 60 days prior to the term expiration date of any Board member (except for the representative of the Department), notice of such term expiration shall be published in a daily newspaper of general circulation throughout the State and on the DNREC web site. Any person desiring to serve on the Board shall submit a written request to the Secretary. The Secretary shall review all submissions and select the best qualified candidate(s), publishing each selection on the DNREC web site. If no one expresses an interest in the potential vacant position the Secretary may, at his/her discretion, re-designate the incumbent to serve another three (3) year term, or make a direct appointment to the Board. The Board shall advise the Department on matters relating to issuance of Class A, Class B, Class C, Class D, Class E, Class F, Class H and Class I licenses.

4.14.1 The applicant for a license renewal shall submit with the renewal application proof that he/she has attended and/or satisfactorily completed a minimum of 10 hours of continuing education training relating to the wastewater industry. This is to include siting, design, construction, operation and/or maintenance of on-site wastewater treatment and disposal systems. Class D soil scientists not ARCPAC or professionally certified must attend at least three (3) hours of soil related curriculum. Any training must be sponsored by recognized governmental, educational or industrial groups which include equipment manufacturers, and be approved by the Board. The number of hours of continuing education for first year licensees will be decided by the Board and be based upon license issuance date.

4.14.2 The Secretary may deny, suspend or revoke the license of a Class A, B, C, D, E, F, H or I licensee after considering the recommendations of the Board and demonstration that the licensee has practiced fraud or deception; that reasonable care, judgment, or the application or their knowledge or ability was not used in performance of their duties; or that the licensee is incompetent or unable to perform their duties properly, and;

4.14.2.1 Violated any provision of these Regulations;

4.14.2.2 Violated any lawful order or rule rendered or adopted by the Department;

4.14.2.3 Obtained his/her license or any order, ruling, or authorization by means of fraud, misrepresentation, or concealment of material facts;

4.14.2.4 Failure to obtain the necessary hours of continuing education training required by these Regulations;

4.14.2.5 Been found guilty of misconduct in the pursuit of his/her profession.

4.15 Any person whose application for a license has been denied or person whose license has been suspended or revoked shall be notified in writing and provided reasons for the decision. Within 20 days of notification, the person shall notify the Secretary, in writing, if an appeal pursuant to 7 **Del.C.** §6008 is to be requested. If no appeal request is received within the designated period the decision shall become final.

4.16 Licenses issued pursuant to this Section are not transferable and shall expire on December 31st of each year. A license may be renewed for one (1) year without examination for an ensuing year provided the licensee submits a completed license renewal form (provided by the Department) by November 30th of each year, shows proof of the number of hours of continuing education training and pays any applicable renewal fees adopted by the Department. If the licensee fails to renew the license for more than one (1) year the licensee must reapply for the license and take all necessary examinations. A reminder will be sent to the licensee to renew his/her license by the Department. This reminder will be sent to the address on file for the licensee. It is the licensee's responsibility to renew the license yearly and notify the Department of any changes.

4.17 In the event that any person holding a valid license issued by the Department under §7101-4.0 of these Regulations, 7 **Del.C.** §7101, has said license suspended or revoked by the Secretary pursuant to §7101-4.12.2, or, if any license holder should die or be unable to perform the required service prior to the completion of any activity contemplated by these Regulations, the owner of the affected property will procure another licensed person to complete said activity pursuant to §7101-3.1 of these Regulations, 7 **Del.C.** §7101. The Department will not assume responsibility/liability for the completion of said activity in place of the original licensee. However, the Department will ensure regulatory compliance until said activity is completed.

5.0 **SMALL SYSTEMS (< 2,500 GPD)**

5.1 This section prescribes the necessary soils investigations, permitting and installation requirements, operation and maintenance procedures and waiver applications for all on-site wastewater treatment and disposal systems with daily flow rates of < 2,500 gallons, including but not limited to all conventional, innovative/alternative, holding tanks and community on-site wastewater treatment and disposal systems (OWTDS).

5.2 Soil Investigations

5.2.1 Site Evaluation Procedures

5.2.1.1 A site evaluation is the first step in the process of obtaining a construction permit for an on-site wastewater treatment and disposal system. Any person applying for a permit to install a new or replacement on-site wastewater treatment and disposal system shall first obtain a site evaluation report prepared by a Class D soil scientist. The Department shall only conduct site evaluations for Home Rehabilitation Loan Programs (HRLP), block grant households, State Revolving Fund (SRF) sites and other qualifying income programs with similar criteria.

5.2.1.2 Each report shall be applicable to one residential or commercial structure. At a minimum, each report must include; approval page(s) (excluding sites not suitable for conventional on-site wastewater treatment and disposal systems (OWTDS)), report page(s), site drawing, soil profile notes, zoning verification form and the appropriate fee. The site evaluation report shall identify specific site conditions or limitations including, but not limited to, isolation and separation distances, slopes, existing wells, cuts and fills, and unstable landforms.

5.2.1.3 The Class D soil scientist shall specify on the approval page the type(s) of on-site wastewater treatment and disposal system(s), suitable under these regulations that may be constructed in the acceptable on-site disposal area(s) as indicated on the site drawing. Any other on-site wastewater treatment and disposal options available in the evaluated area shall be specified by the Class D soil scientist. The scientist shall either assign a percolation rate (see Exhibit Y) or have the appropriate hydraulic conductivity or percolation test(s) conducted in the materials interpreted to be the most hydraulically limiting within the upper 60 inches in the proposed disposal area. The estimated percolation rate should take into consideration, but not be solely governed by, the slowly permeable material. Horizons in contact with or immediately within the required vertical separation distance may have more relevance than layers much deeper in the profile.

5.2.1.3.1 Percolation rates, actual or estimated, > 120 minutes per inch (mpi) are very slowly permeable and constitute a limiting layer. Such sites shall not be suitable for new construction, except when;

5.2.1.3.1.1 Very slowly permeable horizon(s) can be removed (see sand-lining); or

5.2.1.3.1.2 The required separation distance above the very slowly permeable horizon(s) can be met and maintained (unsaturated permeable soils over very slowly permeable soils); or

5.2.1.3.1.3 Interpretations are to be made in conjunction with DNREC Environmental Scientist(s) to ensure all limiting conditions are addressed prior to making final site suitability determination.

5.2.1.3.1.4 For design purposes;

5.2.1.3.1.4.1 For systems with a separation distance of ≤ 24 inches the assigned percolation rate must be determined based on the most limiting layer above or below (after removal or sand-lining) the very slowly permeable soils or 75 mpi, whichever is greatest. Where the separation distance is > 24 inches, the minimum percolation rate assigned will be 60 mpi. The Class D soil scientist/site evaluator has the discretion to estimate a slower percolation rate than stated based on site specific constraints and professional experience.

5.2.1.4 A site drawing drawn to scale showing the information referenced in Section 5.2.1.9. All site drawings are required to show a reference point (e.g. a numbered utility pole, telephone or electrical box, building(s), property corners or fixed survey marker). A minimum of two such reference points shall be noted on the site drawing. Site drawing(s) shall be based on a whole number scale not to exceed one (1) inch equals 100 feet. Acceptable scales are: 1 inch = 10, 20, 30, 40, 50, 60, 80 or 100 feet. Any site drawing exceeding the dimensions of 8.5 inches X 11 inches must be submitted in duplicate.

5.2.1.5 Site drawings will show the location of all on-site and adjacent wells within 150 feet of the approved soils area. The following procedure shall be used in all cases when on-site or adjacent well(s) cannot be located. For instances where the on-site or adjacent well(s) are below ground and the homeowner or adjacent property owner states that the well is located in a certain area, this information shall suffice for verification of well location. Any well(s) that cannot be verified must be researched through the Water Supply Section of the Department. The search attempts to locate any well(s) that are near the affected parcel. If, after this search is completed, the well location(s) cannot be identified the Class D soil scientist can state “records were researched under this property owner’s name and no information was found”. The Department then sends a letter to the adjacent well owners notifying them of the need to locate their well(s) due to the future installation of an on-site wastewater treatment and disposal system. If no response is rendered within 15 days of receipt then the new system is to be designed to maximize the isolation distance from the property line.

5.2.1.6 A site evaluation prescription shall follow an approach that includes consideration of topography, available area, slope gradient and uniformity, soil profile (thickness and depth of each horizon, color, percolation, absorption rate, redoximorphic features, texture (see Exhibit B), and zones of saturation), drinking water supplies, bodies of water, and shellfish growing areas. All suitable soils within the evaluated area shall be delineated regardless of isolation distances, physical encumbrances and easement requirements as well as any of the above conditions which may exist.

5.2.1.7 All soil borings, holes and/or pits shall be flagged, identified and adequately shown on the site drawing.

5.2.1.8 In describing the soils and soil profile, the Class D soil scientist shall adhere to the procedures and techniques provided in the Soil Survey Manual, USDA Agricultural Handbook No. 18 Keys to Soil Taxonomy and Field Book for Describing and Sampling Soils, as published by the U.S. Department of Agriculture.

5.2.1.9 The report shall contain, at a minimum, observations of the following site characteristics, if present:

5.2.1.9.1 Parcel size, location map of project site, 12 digit Hydrologic Unit Code (HUC) watershed name, configuration and approximate dimensions.
5.2.1.9.2 Slope – approximate percent and direction.
5.2.1.9.3 Surface streams, springs or other bodies of water and their definition (e.g. shellfish, intermittent, ephemeral, etc.).
5.2.1.9.4 Existing wells within 150 feet of approved soils area, measured from two (2) reference points or established survey control.
5.2.1.9.5 Escarpments.
5.2.1.9.6 Cuts and fills.
5.2.1.9.7 Unstable landforms.
5.2.1.9.8 A representative number of soil profile descriptions (minimum of three (3) soil borings or two (2) test pits per acre) and one soil profile description per design area in the evaluated area(s). These shall identify the soil series or taxonomic subgroup (e.g. Sassafras or Typic Hapludult). The geographic coordinates of each representative soil boring and/or test pit, a minimum of two (2), must be determined by a global positioning system.
5.2.1.9.9 Zones of saturation (as indicated by redoximorphic features).
5.2.1.9.10 Approved soils area(s) with extents delineated.
5.2.1.9.11 Encumbrances.
5.2.1.9.12 Central wastewater or water systems availability.
5.2.1.9.13 Location of any wetlands, refer to the 2007 Statewide Wetlands Mapping Project (SWMP) map, and State Tidal Wetlands maps, if applicable.
5.2.1.9.14 Any overhead utilities.
5.2.1.9.15 Existing buildings.
5.2.1.9.16 Existing on-site and adjacent wastewater treatment and disposal systems.
5.2.1.9.17 Flood prone areas designated as “V” zones by FEMA.
5.2.1.9.18 Tax ditches with associated easements and right of ways.
5.2.1.9.19 When prescribing a Wisconsin At-Grade system include the following information:
5.2.1.9.19.1 The percolation rate of the most limiting horizon within the upper 36 inches.
5.2.1.9.19.2 The incremental loading rate (ILR) (see Exhibit V) of each horizon within the upper 20 inches.
5.2.1.9.19.3 Provide this information in the “Design Considerations and Comments Section” of the approval page.

5.2.1.10 The application/construction permit may be submitted with the site evaluation, in an emergency situation, when there is a public health risk associated with a malfunctioning system. The permit shall not be approved until the site evaluation is reviewed and complies with these Regulations. Site evaluations needed to replace the malfunctioning system shall be given a priority review.

5.2.1.11 Once received, the report shall be reviewed for compliance with current Regulations by a DNREC Environmental Scientist with a soil science background. If the report is in non-compliance, the Class D soil scientist shall be notified. The Class D soil scientist shall contact the Department and follow up with written correspondence to rectify the discrepancy. The Department shall not modify any site evaluation report unless requested by the Class D soil scientist. The corrections shall

be submitted to the Department from the Class D soil scientist and a corrected copy to the owner/agent. The review process, which may include a field check, shall take place within 10 working days of receipt.

NOTE: If approval cannot be issued within 10 working days, the property owner or authorized agent shall be notified of the delay and a tentative date of approval or denial shall be given. However, if no property owner or authorized agent contact number provided the Department will contact the Class D soil scientist. Once approved, the report shall be mailed to the property owner or his/her authorized agent. A percentage of randomly chosen site evaluations submitted shall be field verified by DNREC staff. Site evaluations' requiring test pits should be scheduled with the Department 72 hours prior to conducting the site evaluation.

5.2.1.12 Approval of a site evaluation indicates only that the site evaluation was conducted in compliance with these Regulations. It is not an indication of the correctness or quality of the site evaluation or an indication that a permit can be issued.

5.2.1.13 The approved site evaluation report shall indicate the type of the initial and type of replacement system for which the site is approved.

5.2.1.14 Technical regulation changes shall not invalidate an unexpired approved site evaluation but may require the use of a different type of system.

5.2.1.15 The approved site evaluation shall be valid for five (5) years from the date of the Department's approval unless a subdivision base plan restricting well and on-site wastewater treatment and disposal system locations has been approved by the Department and recorded in the local Recorder of Deeds Office. After the five (5) year period, a current site evaluation as outlined in Section 5.2.1 shall be submitted to the Department for approval. This site evaluation will be reviewed as outlined in Sections 5.2.1.10 and 5.2.1.11 and must include at least one (1) new soil boring and profile description as well as any previous descriptions referred to in the approval page and report.

5.2.1.16 Supplemental soil information submitted after the original site evaluation has been approved and, prior to expiring, shall include a revised approval page, report page, soil profile notes, and revised site drawing locating supplemental borings/test pits. In all cases, the new report shall be approved provided all criteria for approval are met. If the purpose of supplemental work is to change the type of system previously prescribed, another review fee shall be required. Likewise, any borings/test pits conducted greater than 100 feet from the previously approved area, with or without a system change, or lot reconfiguration shall require a review fee. On larger parcels, the area evaluated shall be delineated on the site drawing.

5.2.1.17 The Department shall issue a notice of its intention to deny a site evaluation when appropriate.

5.2.1.18 A property owner or agent has the option to use observation wells and/or piezometers to demonstrate that redoximorphic features are not an indication of a present day limiting zone. Section 5.2.3 provides procedures for the use of observation wells/piezometers to determine the depth and duration of zones of saturation.

5.2.1.19 Site evaluations shall expire in accordance with Section 5.2.1.15 unless:

5.2.1.19.1 A subdivision base plan (record plat) restricting well and on-site wastewater treatment and disposal system (OWTDS) locations has been approved by the Department and then recorded with the Recorder of Deeds.

5.2.1.19.1.1 Recordation and/or re-recordation of a minor subdivision or individual lots not in a major subdivision

5.2.1.19.1.1.1 Applicant to submit to the Groundwater Discharges Section a Declaration of Covenants and Restrictions (DCR) with a surveyed site plan restricting the well and OWTDS locations along with the site evaluation. Once approved the applicant shall have the DCR and site plan recorded with the Recorder of Deeds.

5.2.1.19.1.2 Re-recordation of lots within a major subdivision

5.2.1.19.1.2.1 If partial subdivision re-recordation is approved by local zoning authority restricting well and OWTDS locations, the Department will consider a new subdivision base plan (record plat) for the purposes of this regulation.

5.2.1.19.1.3 Re-recordation of a major subdivision

5.2.1.19.1.3.1 If a subdivision re-recordation is approved by local zoning authority restricting well and OWTDS location, the Department will consider a new subdivision base plan (record plat) for the purposes of this regulation.

5.2.1.19.2 Installed Systems

5.2.1.19.2.1 Replacement/Malfunction (as defined in these Regulations)

5.2.1.19.2.1.1 In the case of replacement/malfunction system; a new site evaluation performed by a Class D soil scientist is required if the site evaluation is over five (5) years old.

5.2.1.19.2.1.1.1 If the site evaluation is less than five (5) years old; the Department strongly recommends that a supplemental soil boring be performed by a Class D soil scientist.

5.2.1.19.2.2 Expansion/Upgrade

5.2.1.19.2.2.1 In the case of an expansion/upgrade system for which an approved site evaluation is on file, it is recommended that a supplemental soil boring(s) as per section 5.2.1.16 be performed by a Class D soil scientist.

5.2.1.19.2.3 Emergency Repair/Repair

5.2.1.19.2.3.1 In the case of an application for a repair, the Department will review on a case by case basis the information supplied/extenuating circumstances to determine if supplemental borings or a new site evaluation is needed.

5.2.1.19.3 Any expired site evaluation that allowed a holding tank as an option and a new site evaluation and wet season monitoring (if applicable) confirms that it is a denied site; the Department will apply the Regulations that were in effect when the original site evaluation was denied.

5.2.2 Soil Feasibility Study

5.2.2.1 It is the policy of the Department to facilitate compliance with these Regulations through review of proposed development projects as early as possible in the development process to avoid unnecessary conflicts and expense. Any development project, which may or may not constitute a major subdivision, can

submit a feasibility study to satisfy other local government approval processes. Any project that proposes to use individual on-site and/or large wastewater treatment and disposal systems must submit a letter of intent prior to initiating any preliminary soil investigations.

5.2.2.2 The letter of intent must contain the following details:

5.2.2.2.1 The name of the developer and landowner.

5.2.2.2.2 The size, tax map number, 12 digit Hydrologic Unit Code (HUC) watershed name, zoning certificate for and the location of the parcel.

5.2.2.2.3 Number of proposed lots and/or projected flow rates.

5.2.2.2.4 Projected start date of site/soil investigative work.

5.2.2.2.5 Name of the Class D.2 or D.3 soil scientist and contact information

5.2.2.3 If the proposed number of lots is ≥ 50 **and** ≥ 50% of the on-site soils have limiting zones < 48 inches **or** the number of lots is ≥ 100 **or** a large on-site wastewater treatment and disposal system (LOWTDS) is proposed, proceed to the requirements of Section 6.2, if not, proceed to Section 5.2.2.5. Prior to the submission of a SIR, the Class D soil scientist may submit a soil feasibility study in accordance with Section 5.2.2.4.

5.2.2.4 A soil feasibility study for a LOWTDS shall contain the following information:

5.2.2.4.1 Site plan drawn to scale not to exceed one (1) inch equals 200 feet.

5.2.2.4.2 Illustrate topography on one (1) foot contour intervals unless the Department approves the use of an alternate scale due to extreme variations in the elevation on the site.

5.2.2.4.3 Conduct a soil suitability evaluation of the project site following the procedures prescribed in Section 5.2.1. The area of investigation should be concentrated within the proposed LOWTDS. The soil scientist must demonstrate the area proposed for the LOWTDS represents the best soils on the project site. The extent and nature of the soil evaluation shall be determined by the Class D soil scientist.

5.2.2.4.4 Based on preliminary design criteria established by the Class D soil scientist, as a result of the soils evaluation, a preliminary engineering study prepared by a Class C designer must be included which demonstrates the suitability of the evaluated area for the proposed number of lots. The engineering study must include, at a minimum, the proposed method of disposal, proposed treatment levels, and proposed design flow rates, along with preliminary calculations/layout to demonstrate there is sufficient area for both the initial and replacement system.

5.2.2.4.5 The Department may ask for any additional information deemed necessary to make a statement of feasibility.

5.2.2.5 A soil feasibility study for individual OWTDS shall be filed with the Department setting forth the proposed manner of compliance with these Regulations. The soil feasibility study shall contain the following information:

5.2.2.5.1 Site plan must be drawn to scale not to exceed one (1) inch equals 200 feet.

5.2.2.5.2 Illustrate topography by two (2) foot contour intervals unless the Department approves the use of an alternate scale due to extreme variations in elevation on the site.

5.2.2.5.3 Illustrate the approximate location of all wells, watercourses, roads and on-site wastewater treatment and disposal systems within 150 feet of the perimeter of the property.

5.2.2.5.4 Conduct a soil suitability evaluation of the project site following procedures prescribed in Section 5.2.1. The extent and nature of the soil evaluation shall be determined by a Class D soil scientist. The Class D soil scientist shall coordinate the planning of the soils evaluation with the Department prior to initiating work. The use of a 200 foot grid may help facilitate the evaluation.

5.2.2.5.5 Indicate the type of limiting zone, its depth, and list the results of the site and soils analysis on the appropriate forms.

5.2.2.5.6 Each soil interpretative unit identified for potential on-site wastewater treatment and disposal shall have at least one (1) set of percolation tests (minimum of 3) conducted within it to establish representative percolation rates for each interpretative unit.

5.2.2.5.7 Lot numbers and approximate lot areas shall be provided.

5.2.2.5.8 A general site location map shall be included on the preliminary plan for reference identification of the area.

5.2.2.5.9 Proposed storm water management areas.

5.2.2.5.10 Location of any wetlands, refer to the 2007 Statewide Wetlands Mapping Project (SWMP) map, and State Tidal Wetlands maps, if applicable.

5.2.2.5.11 Any other information required by the Department.

5.2.2.6 The Department shall conduct a general review of the preliminary plan and give the owner/developer a statement of preliminary subdivision feasibility which shall contain a statement of on-site wastewater treatment and disposal feasibility. This Section shall not be construed to relieve the applicant of the responsibility of obtaining individual site evaluations and permits from the Department for each lot prior to commencement of construction of any OWTDS.

5.2.3 Observation Wells/Piezometers

5.2.3.1 Observing water table fluctuations shall follow these procedures:

5.2.3.1.1 The property owner or authorized agent shall notify the Department, in writing, to “Request to use observation wells and/or piezometers” to determine the present day limiting zone which must include the following details:

5.2.3.1.1.1 The name of the developer and/or property owner.

5.2.3.1.1.2 The size, tax parcel number, zoning certificate for and location of the parcel.

5.2.3.1.1.3 Contact information of the property owner and/or developer (address/phone).

5.2.3.1.1.4 Names of the Class D soil scientist and person reading the wells, if different.

5.2.3.1.1.5 Projected date of observation well/piezometer installation.

5.2.3.1.1.6 Projected date of reading commencement.

5.2.3.1.1.7 Reason for request.

5.2.3.1.2 The Class D soil scientist shall provide the following information:

5.2.3.1.2.1 A minimum of three (3) logged soil profile notes for borings performed within the proposed monitoring area.

5.2.3.1.2.2 Site evaluation report page summarizing soil/site conditions.

5.2.3.1.2.3 Sketch showing observation well/piezometer locations.

5.2.3.1.2.4 Appropriate fee.

5.2.3.1.3 The Department shall review the submittals and provide comments/concerns, if any, regarding the proposed request and/or soils information.

5.2.3.1.4 Observation wells and/or piezometers shall be installed by or under the direct on-site supervision of a well driller licensed by the State of Delaware in accordance with the current Regulations Governing the Construction and Use of Wells and Exhibit Z. It shall be the responsibility of the Class D soil scientist to determine the depth of installation with guidance provided by the Department, if solicited.

5.2.3.1.5 The observation wells and/or piezometers must be installed prior to December 1st and monitoring will commence on this date as well. Monitoring will continue through May 15th of the following year as outlined below.

5.2.3.1.6 Monitoring must be performed by Class A, B, C, D, E, F, H or I licensees or DNREC licensed well driller. Monitoring shall occur, at a minimum, weekly throughout the monitoring period. If water is observed above 18 inches for siting OWTDS, more frequent observations are warranted. For the purposes of siting an OWTDS via observation wells and/or piezometers the hydrologic limiting zone will be determined based on the average of all readings taken within a 14 consecutive day period during the wet season determined to represent the seasonal peak water table levels.

5.2.3.1.6.1 The Department shall field check the monitoring periodically during the time of expected saturated soil conditions at their discretion.

5.2.3.1.6.2 The Department may, at any time during the observation period, verify the observed water depth by conducting a soil boring next to, and of equal depth with, any of the observation wells/piezometers. If the water level in the fresh boring, after 24 hours, presents a discrepancy with the water level observed in the well/piezometer, then at the discretion of the Department, the data may be declared invalid. If the data is declared invalid, then the Department will notify the owner in writing of the invalid data within 10 days of determination.

5.2.3.1.7 It shall be the responsibility of the Department to evaluate if precipitation levels occurring during the monitoring period are sufficient for accepting data. If, in the estimation of the Department, insufficient precipitation was received, observation wells and/or piezometers may have to be monitored an additional wet season. A near normal monitoring period is defined as a period that has plus or minus one standard deviation of the long term mean annual precipitation. (Long term refers to 30 or more years). Also, the mean monthly precipitation during a normal period must be plus or minus one standard deviation of the long term monthly precipitation for 8 of the 12 months. For the most part, normal years can be calculated from the mean annual precipitation.

5.2.3.1.8 Should the precipitation and long-term groundwater levels be significantly below or above normal, a mathematical analysis may be utilized under the direction of the Department to correlate present data with past years. The methodology and validity of such analysis is at the sole discretion of the Department.

5.2.3.1.9 When monitoring determines that the site is suitable, the Department will request a complete site evaluation be submitted in compliance with these Regulations prior to August 15th to be reviewed. The monitoring information must be incorporated into the new site evaluation. An approved site evaluation report shall be issued indicating the appropriate system type(s) and both, the site evaluation and monitoring data, will expire five (5) years from date of approval if not permitted.

5.2.3.1.10 Observation wells and/or piezometers are required to be abandoned in accordance with the current Regulations Governing the Construction and Use of Wells.

5.2.4 Soil Percolation Rate Determination

5.2.4.1 Percolation rates are assigned by State Environmental Scientists and Class D soil scientists based upon observed soil structure and textures during the site evaluation. The Department has established a table of percolation rates based upon USDA soil textures (see Exhibit Y).

5.2.4.2 Soil Percolation Test

5.2.4.2.1 The soil percolation test shall provide a measure of the rate at which water moves from an uncased bore hole into the surrounding soil under nearly constant head in both vertical and horizontal directions.

5.2.4.2.2 One (1) soil percolation test shall consist of three (3) test holes.

5.2.4.2.3 The percolation test shall be performed only after a site evaluation has indicated that the soil may be suitable for an on-site wastewater treatment and disposal system. The percolation test shall be used to determine the rate at which wastewater effluent can be expected to seep into the soil. This rate shall be used in conjunction with a projected daily flow rate to determine the area required for proper treatment and disposal.

5.2.4.2.4 The depth of the percolation test holes shall not be determined until a site evaluation is completed and a limiting zone, if any, is identified. The depth of the percolation test holes shall be as follows:

5.2.4.2.4.1 If the limiting zone occurs at least 20 inches from the soil surface, the percolation test holes shall be within the soil horizon controlling the water movement vertically and/or horizontally to a depth of 60 inches.

5.2.4.2.4.2 If the limiting zone occurs at less than 20 inches from the surface, the site is unsuitable for a conventional on-site wastewater treatment and disposal system. However, if replacing a failing or malfunctioning system, Section 5.2.4.2.4.1 should be used without regard for the 20 inch limiting condition. In situations where sand-lining through an impermeable or less permeable horizon within the top 48 inches, a percolation test should be performed within the soil zone which is controlling the water movement vertically and/or horizontally beneath the restrictive material to a depth of 60 inches.

5.2.4.2.5 The following procedures shall be used for percolation tests:

5.2.4.2.5.1 A minimum of three (3) test holes shall be dug within the proposed installation area of the absorption facility. Additional tests may be required in areas with varying soil characteristics or when warranted at the sole discretion of the Department due to the size of the required disposal area.

5.2.4.2.5.2 Test holes with a horizontal diameter of six (6) inches shall be dug or bored. A post hole digger, auger or mechanical digger may be used to dig the holes.

5.2.4.2.5.3 The bottom and sides of each test hole shall be scarified to remove any smeared soil surfaces that result from digging. Loose soil shall be removed from the hole. Two (2) inches of coarse sand or fine aggregate shall be placed in the bottom of the hole to prevent sealing of the hole bottom when water is added.

5.2.4.2.5.4 The hole shall be filled with water to a minimum depth of 12 inches above the aggregate or sand. This level shall be maintained for a period of at least four (4) hours.

5.2.4.2.5.5 The water level shall then be adjusted to six (6) inches over the gravel or sand. The hole shall be allowed to stand undisturbed for 30 minutes. The water level shall again be adjusted to six (6) inches over the aggregate and the hole allowed to infiltrate undisturbed for another 30 minutes.

5.2.4.2.5.6 Where the drop in the water level is two (2) inches or more in 30 minutes, the interval for readings during the percolation test shall be 10 minutes. Where the drop in the water level is less than two (2) inches in 30 minutes, the interval for readings during the percolation test shall be 30 minutes. The drop in water level shall be recorded after each reading and the water level shall be adjusted to six (6) inches above the gravel. Readings shall continue for a minimum of four (4) hours where the interval between readings is 30 minutes. Where the interval is 10 minutes due to fast percolation, the readings may be discontinued after one (1) hour. Where the drop between readings has not stabilized at the end of the minimum period, the reading shall continue until a steady rate is established. A steady rate is established when two (2) successive water level drops do not vary by more than one-sixteenth ($^{1}/_{16}$) of an inch. If any of the holes has a rate that is significantly different from the other holes, it shall be examined to see if this hole is in a soil that is different from the soil described in the site evaluation. If the hole is determined, by the licensed percolation tester, to be uncharacteristic of the site it shall be excluded from analysis but listed on the application.

5.2.4.2.5.7 The percolation rate for the site shall be determined by taking the arithmetic average of all percolation tests conducted. Percolation rates slower than 120 minutes per inch (mpi) are unacceptable and shall not be used to determine the arithmetic average percolation rate but shall be reported. On-site wastewater treatment and disposal systems shall not be placed on those portions of any sites that have percolation rates slower than 120 mpi.

5.2.4.3 Additional Methodologies

5.2.4.3.1 At the discretion of the Department or Class D soil scientist, additional methodologies may be preferred as a substitute for the soil percolation test. Approved test methods are given in the current edition of Methods of Soil Analysis, ASA and the ASTM Standards.

5.2.5 Site Interpretation Advisory Council

5.2.5.1 The purpose of the Site Interpretation Advisory Council (Council) is to act as an objective peer group in the review of discrepancies between the Department and Class D soil scientists regarding questions of interpretation of soil and site information for the purpose of siting on-site wastewater treatment and disposal systems.

5.2.5.2 The Council shall restrict its charge to those items normally and commonly addressed when conducting a site evaluation as discussed below. The Council specifically excludes instances regarding the engineering design and/or installation of on-site wastewater treatment and disposal systems except when it is directly applied to the soil science practice.

5.2.5.2.1 The description and interpretation of soil morphology in regard to the proper functioning of on-site wastewater treatment and disposal systems utilizing the soil as part of the treatment process.

5.2.5.2.2 The characterization of lithologic and hydrologic limiting layers and geomorphology pertinent to the proper siting and functioning of on-site wastewater treatment and disposal systems.

5.2.5.2.3 The recognition and documentation of site limitations for the placement of on-site wastewater treatment and disposal systems (e.g. existing wells and on-site wastewater treatment and disposal systems) in accordance with standard practice in Delaware.

5.2.5.3 The Council shall be appointed by the Secretary and consist of the following members:

5.2.5.3.1 Four (4) non-governmental Class D.2 or D.3 soil scientists actively practicing in the State of Delaware for two (2) or more years with one (1) acting as an alternate.

5.2.5.3.2 One (1) employee of the Department with soils and on-site wastewater industry expertise.

5.2.5.3.3 One (1) soil scientist designated by the State Conservationist through the State Soil Scientist, NRCS, USDA.

5.2.5.3 4 A manager of the Groundwater Discharges Section (GDS), DNREC, shall serve as a liaison to the Council without voting privileges.

5.2.5.3.5 All members shall serve three (3) year terms. Procedures shall be established by the Council to stagger terms so as to provide continuity.

5.2.5.4 Documentation and testimony regarding a review shall be submitted to the Council. After the initial review by the Council, a determination shall be made as to whether sufficient information has been submitted to render an informed decision. The Council may request additional information from the applicant before proceeding with the review. There shall be no cost to the Council for any information submitted.

5.2.5.5 Within 30 days from receipt of the documentation, the Council shall render a decision, based on a simple majority vote, regarding which system(s), if any, are suitable under the Delaware Regulations.

5.2.5.6 A site visit shall be conducted by at least two (2) members of the Council. The applicant is responsible for all costs that may be incurred. Council members shall not be reimbursed for any expenses.

5.2.5.7 Any decision rendered by the Council shall be considered by the Secretary and may be a deciding factor in his/her decision. The applicant still maintains his/her right to appeal the decision of the Secretary in accordance with 7 **Del.C.** §6008.

5.2.5.8 The Council shall designate one of its members representing the private sector to serve as chairperson for a period of one year. The chairperson, or his/her designee, serving as the principal contact person between the Council and a manager of the Groundwater Discharges Section (GDS), shall perform the following duties:

5.2.5.8.1 Call and preside at all Council meetings. (A GDS manager may also call a meeting, but is not entitled to preside at a Council meeting.)

5.2.5.8.2 Upon receipt of a request, poll the Council members and communicate the results to the GDS manager calling a Council meeting when appropriate. (This function may also be performed by the GDS manager, when necessary.)

4.2.5.8.3 Prepare a letter communicating the Council's decision in each case. (The letter shall be sent within 15 working days after the Council's decision to the GDS manager for signature and returned for mailing within three (3) working days.)

5.2.5.9 The following services shall be furnished by the DNREC to facilitate the operation of this Council:

5.2.5.9.1 A manager of the Groundwater Discharges Section shall represent the Section's position at all Council meetings.

5.2.5.9.2 All submittals for consideration shall be circulated to the Council under the direction of the GDS manager within 10 working days.

5.2.5.9.3 A GDS manager, at the request of the Council chairperson, shall reserve space in the DNREC facilities for Council meetings.

5.2.5.9.4 The DNREC shall provide clerical services for record keeping. Records of the Council meetings shall be furnished to all Council members within 15 working days following the meetings.

5.2.5.9.5 The clerical person shall prepare and mail the decisions of the Council upon receipt from the chairperson.

5.2.5.10 The Council shall restrict reviews to those submittals using one of the following two (2) methods:

5.2.5.10.1 A submittal from the Secretary, DNREC; or

5.2.5.10.2 A submittal from a Class D soil scientist.

5.2.5.11 All submittals shall be circulated to the Council membership. A majority vote of the Council is required for any submittal to be accepted for Council review.

5.3 Permitting

5.3.1 General Requirements

5.3.1.1 No person shall cause or allow construction, or repair of a system, or any part thereof, without a permit. An exception may be allowed for certain emergency repairs as set forth in these Regulations.

5.3.1.2 All disposal systems shall be located according to the minimum horizontal isolation distances specified in these Regulations (see Exhibit W). All isolation distances for capped systems and elevated sand mounds shall be measured from the edge of the aggregate or aggregate-free chamber.

5.3.1.3 All pressurized systems must be constructed in such a manner that the operating pressure can be checked at the end of the distal lateral (permanent tee, etc).

5.3.1.4 All pressurized systems must utilize timers or other electrical on/off delay devices to ensure dosing frequencies. Timers must be part of the control panel.

Any timer system utilizing a demand over-ride float shall incorporate a pump cycle counter and elapsed time meter.

5.3.1.5 Trench depths as prescribed in the approved site evaluation are for the upslope side of the trench only. Trench systems designed in sloping disposal areas > 5% may result in downslope trench sidewall depths that may change system type (e.g. capping fill vice full depth).

5.3.2 Disposal System Sizing

5.3.2.1 All disposal systems shall be sized based on the estimated wastewater flow and the results of percolation tests or the assigned percolation rate. Percolation rates shall be based on USDA soil textures and assigned by the Class D soil scientist. The table of percolation rates used by the Department (see Exhibit Y) does not represent assigned rates, but instead gives estimates based upon textures. Percolation rates < 20 minutes per inch (mpi) will not be allowed for designing any on-site wastewater treatment and disposal system, unless otherwise approved by the Department.

5.3.2.2 The minimum disposal area required for trench systems with percolation rates ≤ 120 mpi shall be determined from the following equation:

$A = 0.33\ Q\ (t)^{0.5}$

Where:

A = the minimum disposal area required in square feet

Q = wastewater application rate in gallons per day

t = the average percolation rate in minutes per inch (minimum rate is 20 mpi for design)

5.3.2.3 The minimum disposal area required for seepage bed systems with percolation rates ≤ 120 mpi shall be determined from the following equation:

$A = 0.42\ Q\ (t)^{0.5}$

Where:

A = the minimum disposal area required in square feet

Q = wastewater application rate in gallons per day

t = the average percolation rate in minutes per inch (minimum rate is 20 mpi for design)

5.3.2.4 Where percolation rates are < 6 mpi (minimum rate is 20 mpi for design), such as in soils with USDA textures of sands, and loamy sands, a pressurized distribution system is required; the minimum disposal area shall be determined from the following equation:

$A = 1.2\ Q$

Where:

A = the minimum disposal area required in square feet

Q = design flow rate in gallons per day

5.3.2.5 The minimum disposal area required for low-pressure pipe systems with percolation rates ≤ 120 mpi (minimum rate is 20 mpi for design) shall be determined from the following equation:

$A = UQ$

Where:

A = the minimum disposal are required in square feet

Q = design flow rate in gallons per day

U = unit absorption area (see Exhibit P)

5.3.2.6 The minimum disposal area for Wisconsin At-Grade systems with percolation rates ≤ 75 mpi (minimum rate is 20 mpi for design) shall be determined from the following criteria:

5.3.2.6.1 Calculate the long term acceptance rate (LTAR) (see Exhibit V); and

5.3.2.6.2 Calculate the horizontal acceptance rate (HAR) in gpd/ft using the following equation:

HAR = sum (incremental loading rate (in site evaluation) (see Exhibit V)) X (thickness of each horizon (inches) to a depth of 20 inches)

5.3.2.6.3 Calculate the effective absorption area (EAA) in ft^2 using the following equation:

EAA = Q/LTAR

Where:

Q = design flow rate in gallons per day

LTAR = long term acceptance rate (see Section 5.3.2.6.1)

5.3.2.6.4 Calculate the effective absorption width (EAW) in feet using the following equation:

EAW = HAR/(1.2 – LTAR)

Where:

HAR = horizontal acceptance rate (see Section 5.3.2.6.2)

LTAR = long term acceptance rate (see Section 5.3.2.6.1)

NOTE: An effective width of four (4) to nine (9) feet is appropriate. The designer should use an EAW that is ≤ the calculated value. If the calculated value is > 10 feet then limit the EAW to 10 feet.

5.3.2.6.5 Calculate the absorption length (AL) in feet using the following equation:

AL = EAA/EAW

5.3.2.7 For design criteria and requirements for the permitting of micro-irrigation (drip) or peat biofilter systems refer to the specific Department guidelines located at the end of the Regulations.

5.3.3 Wastewater Design Flow Rates

5.3.3.1 The projected peak daily wastewater flow shall be used to determine the appropriate size and design of on-site wastewater treatment and disposal systems.

5.3.3.2 Where actual calibrated metered flow data indicating peak daily flows over the most recent three (3) year period are available for a similar facility, such peak flow data may be substituted for the wastewater flows listed in this section subject to the approval of the Department. When ranked in descending order the adjusted design daily flow shall be determined by taking the numerical average of the daily readings within the upper 10% of the daily readings.

5.3.3.3 The design wastewater flow from residential dwellings, including single family, multiple family, manufactured homes, and apartments served by on-site wastewater treatment and disposal systems shall be 120 gallons per day per bedroom. The minimum design flow for any commercial property shall be 120 gallons per day and residential dwellings shall be 240 gallons per day. Credit for water conservation devices will be accounted for according to current Department guidelines.

5.3.3.4 The design wastewater flow from other residential, commercial and/or institutional facilities served by on-site systems shall be as prescribed in Exhibit D.

5.3.3.5 Disposal systems shall be designed to receive all wastewater, except for water softener backwash (regeneration water), from the building or structure served unless otherwise approved by the Department.

5.3.3.6 All restaurants or other establishments involved in food preparation activities shall install external grease traps as required by the Department.

5.3.3.7 Laundromat and car wash wastewater shall be pretreated as specified by the Department prior to discharge to any absorption facility under these Regulations.

5.3.3.8 Industrial wastewater shall not be discharged into a septic tank unless prior approval is obtained from the Department.

5.3.4 Isolation Distances

5.3.4.1 The minimum isolation distances set forth in Exhibit C shall be maintained when designing, locating, repairing, replacing, and installing on-site wastewater treatment and disposal systems.

5.3.4.2 The Department may require greater isolation distances for systems when conditions warrant for purposes of protecting environmental resources and the public health.

5.3.4.3 Isolation distances may be decreased by the Department based on a site specific geological and hydrogeological analysis performed pursuant to the requirements of these Regulations, provided that the Department is satisfied that such decrease will allow for protection of environmental resources and the public health.

5.3.4.4 Existing on-site wastewater treatment and disposal systems which are repaired or replaced shall be subject to the requirements of this Section, provided however, that if it is impossible to comply with such requirements due to lot size limitations, the repaired or replaced system shall conform to the maximum extent practicable with the requirements of this Section as determined by the Department at its sole discretion.

5.3.5 Water Conservation Devices

5.3.5.1 A 25% reduction in design flow is allowed for water conservation. The absorption facility shall be enlarged if the conservation devices are removed, become inoperative, or the system malfunctions.

5.3.5.2 Water saving plumbing devices are encouraged to lengthen the life of the absorption facility. However, only permanent water saving plumbing devices such as low flush toilets shall be considered in reducing the size of the absorption facility for replacement systems with limited approved disposal area, properties located in a five (5) year plan sewer district or temporary structure. Devices such as inserts in showers are considered temporary. Water conservation reductions of 25% in design flows will not be permissible for new construction.

5.3.6 Dosing and Diversion Systems

5.3.6.1 Effluent from on-site wastewater treatment and disposal systems shall be transmitted to the absorption facility by gravity, pressure distribution systems utilizing a dosing chamber (see Exhibit I) or lifted by a lift station (see Exhibit X) to overcome elevational differences between the septic tank and the gravity absorption facility.

5.3.6.2 Gravity distribution systems may be used when the design wastewater flow requires < 2,500 ft^2 of disposal area for seepage trenches or seepage beds and the percolation rate is ≥ six (6) minutes per inch.

5.3.7 Gravity distribution systems shall conform to the following requirements:

5.3.7.1 All unperforated gravity transmission pipe up to the distribution box shall be Sch. 40 PVC at least four (4) inches or greater in diameter unless lifted by a lift station to a distribution box in which case a minimum 1½ inch diameter pipe would be permissible with a minimum of 20 feet of four (4) inch diameter Sch. 40 PVC pipe set at a minimum grade of ⅛ inch per foot prior to entering the distribution box.

NOTE: Minimum bury depth requirements apply to all pressurized transmission piping – see Section 5.3.9.2.

5.3.7.2 All gravity transmission piping shall be placed on a firm undisturbed or well compacted soil. All joints shall be watertight. A minimum grade of $^{1}/_{8}$ inch per foot shall be provided for gravity transmission piping. Clean backfill shall be placed around and over the pipe and hand tamped to provide compaction.

5.3.7.3 All gravity distribution laterals shall be thin walled or Sch. 40 PVC and shall be four (4) inches in diameter. Perforated PVC pipe shall have $^{3}/_{8}$ to $^{3}/_{4}$ inch diameter holes a maximum of 30 inches on center. Coiled and corrugated piping shall not be used. A grade of less than two (2) inches per 100 feet shall be provided for all gravity distribution laterals.

5.3.7.4 The design and construction of the gravity distribution system shall provide uniform application of the effluent. All distribution laterals shall be of equal length unless approved by the Department. The effluent shall be equally divided between laterals of the gravity distribution system by means of a distribution box.

5.3.7.5 Stepped trenches shall be used on sloping ground.

5.3.7.6 All distribution boxes shall conform to the following requirements (see Exhibit H):

5.3.7.6.1 <u>Location:</u> Distribution boxes shall be used with all gravity systems. They shall be located in accordance with the minimum horizontal isolation distances set forth in Exhibit C. A minimum distance of three (3) feet shall separate the inlet face of the distribution box from the septic tank outlet.

5.3.7.6.2 <u>Capacity:</u> Distribution boxes shall be sized to accommodate the number of distribution laterals required for the distribution system.

5.3.7.6.3 An inlet baffle shall be installed in all distribution boxes. The baffle shall be perpendicular to the inlet pipe and situated six (6) inches from the end of the inlet. The baffle shall be constructed of the same material as the distribution box. In cases where concrete distribution boxes are utilized, there shall be a 12 inch square rising from the box floor, centered with the inlet connection, and permanently affixed. In cases where plastic distribution boxes are utilized, PVC tees or 90° elbows may be incorporated as baffles.

5.3.7.6.4 The inverts of all outlets shall be of the same elevation and at least one (1) inch below the inlet invert.

5.3.7.6.5 Each inlet pipe and outlet distribution lateral shall be connected separately to the distribution box. Unperforated distribution piping shall be Sch. 40 PVC and extend a minimum of five (5) feet from the distribution box prior to the absorption facility.

5.3.7.6.6 The requirements of Sections 5.3.14.6, 5.3.14.8 and 5.3.14.13 shall apply to all distribution boxes approved in accordance with these Regulations.

5.3.7.6.7 Distribution boxes shall be accessible either by means of a removable cover or access riser and shall extend above grade at time of installation. The

riser and lid shall be made of concrete or an equivalent durable material approved by the Department. If multiple risers are needed manufacturer recommendations must be followed. All above finished grade access covers shall be watertight and secure from vandalism.

5.3.7.6.8 All installations of distribution boxes shall be in accordance with the requirements of Section 5.4.3.

5.3.7.6.9 All installed distribution boxes shall be tested to ensure watertight conditions and leveled to ensure an even distribution of flow to each lateral under operating conditions.

5.3.7.7 All systems utilizing a lift station must incorporate a float activated pump control panel. The control panel shall meet the requirements of Sections 5.3.17.13, 5.3.17.14 and 5.3.17.15.

5.3.8 Pressure distribution systems shall be utilized with:

5.3.8.1 Trench or bed systems receiving flows requiring ≥ 2,500 ft^2 of disposal area.

5.3.8.2 All sand mounds.

5.3.8.3 Certain sand-lined systems.

5.3.8.4 All absorption facilities located on soils where percolation rates are < six (6) minutes per inch.

5.3.8.5 All low pressure pipe systems.

5.3.8.6 All Wisconsin at-grade systems.

5.3.9 Pressure distribution systems shall conform to the following requirements:

5.3.9.1 All unperforated pressure transmission pipes shall be Sch. 40 PVC pipe unless approved by the Department. The pipe shall be sized to provide a minimum flow rate of two (2) feet per second in the pipe.

5.3.9.2 All pressure transmission pipes shall be placed below the frost line. All joints shall be watertight and all pipes shall be placed on a firm undisturbed or well compacted soil. Clean backfill shall be placed around and over the pipe and hand tamped to provide compaction. Frost line minimums for each county are as follows:

Sussex – 24 inches **Kent** – 24 inches **New Castle** – 30 inches

5.3.9.3 All pressure distribution laterals shall be Sch. 40 PVC pipe with diameters as determined by a Class C designer. Minimum hole diameters for perforated pressure distribution laterals shall be $^5/_{32}$ to $^1/_2$ inch maximum and spacing intervals as determined by a Class C designer and be placed on center along the length of the pipe. Maximum hole spacing shall be determined by percolation rates as follows:

Percolation Rate	Maximum Hole Spacing
20 - 25 MPI	60 inches
30 - 60 MPI	72 inches
65 - 120 MPI	96 inches

NOTE: Trench systems designed on slopes > 5% must provide for balanced trench loading rates (gpd/ft^2).

5.3.9.4 All laterals shall be connected to manifolds with tees or sanitary tees constructed of PVC corresponding to the size of the connecting laterals.

5.3.9.5 Distribution of effluent from the pressure transmission pipe to the distribution laterals shall be by a central PVC manifold.

5.3.9.6 The dose volume shall be designed so that the estimated daily flow shall be discharged to the absorption facility in a minimum of three (3) equal doses that either meets or exceeds minimum dose volume requirements. Minimum dose volume shall be five (5) times the internal (liquid) volume of all piping not flooded.

5.3.9.7 The size of the dosing pumps shall be selected to maintain a minimum pressure of one (1) psi (2.31 feet of head) at the end of each distribution line. Pump characteristics and head calculations that include maximum static lift, pipe friction and orifice head requirements shall be submitted with permit applications.

5.3.10 Diversion Boxes and Diversion Valves

5.3.10.1 Location: Diversion boxes or diversion valves for dual systems shall be located according to the requirements set forth in Exhibit C.

5.3.10.2 Capacity: Diversion boxes and valves shall be sized to accommodate the piping connected to them.

5.3.10.3 Diversion Valves: All pressure dosed dual systems shall use diversion valves.

5.3.10.4 All installations shall be in accordance with the requirements of Section 5.4.3.

5.3.10.5 Diversion boxes shall be pre-cast concrete or other approved products. Diversion valve systems shall be commercially available and diversion or gate valves shall be constructed of durable cast iron or plastic.

5.3.11 Diversion Box and Diversion Valve Specifications (see Exhibit J):

5.3.11.1 All diversion boxes and diversion valves shall be installed level with connecting piping to minimize stress.

5.3.11.2 Cast iron valves shall be free of dirt and rust. Plastic valves shall be clean and dry before installation.

5.3.11.3 Diversion boxes may be standard distribution boxes with selective flow diversion devices.

5.3.11.4 All inlet and outlet cutout connections shall be sealed watertight with grout or approved rubber gaskets.

5.3.11.5 Appurtenances: All buried valves shall be furnished with a suitable box constructed of durable material approved by the Department and extended to finished grade with a tight fitting secure access cover.

5.3.11.6 Testing: Installed valves and gates shall be tested in the field prior to back fill.

5.3.12 Conventional On-Site Wastewater Treatment and Disposal Systems Criteria

5.3.12.1 **All Full Depth Gravity and Capping Fill Gravity Trench and Bed Treatment and Disposal Systems shall be designed in accordance with the following criteria (see Exhibits K, L, M or N).**

5.3.12.1.1 Landscape Position: Areas with good surface drainage which allow surface water to run off easily without ponding and which are not prone to flooding.

5.3.12.1.2 Slope: 0 - 15%: Bed systems cannot be sited on slopes > 2%, unless otherwise approved by the Department. All systems must be constructed with level bottoms and shall incorporate construction procedures prohibiting equipment from entering the excavation. Trench systems on slopes in excess of

15% shall be permitted only if the design is prepared by a licensed Class C designer. Any such design shall incorporate construction procedures.

5.3.12.1.3 Depth to Limiting Zone: The limiting zone shall be a minimum of three (3) feet below the bottom of the trench ≥ 48 inches beneath the soil surface.

5.3.12.1.4 Percolation Rates:

5.3.12.1.4.1 6 - 120 mpi: Gravity distribution systems may be allowed unless otherwise required by these Regulations. Construction of seepage trenches and beds in soils with percolation rates > 120 mpi shall not be permitted.

5.3.12.1.4.2 < 6 mpi: A pressurized distribution system is required for seepage trenches or beds. The trench or bed may be placed between 12 and 24 inches in order to maintain 36 inch separation distance between rapidly permeable material and the limiting zone.

5.3.12.2 **All Low Pressure Pipe Treatment and Disposal Systems shall be designed in accordance with the following criteria (see Exhibits O & P).**

5.3.12.2.1 Landscape Position: Areas with good surface drainage which allow surface water to run off easily without ponding and are not prone to flooding. Low pressure pipe (LPP) treatment and disposal systems shall not be prescribed in coastal beach sands.

5.3.12.2.2 The depth to the bottom excavation shall be nine (9) inches to 18 inches. Trench width shall be 12 inches unless otherwise approved by the Department.

5.3.12.2.3 Depth to Limiting Zone: The limiting zone shall be a minimum of 18 inches below the bottom of the trench (e.g. a minimum of 27 inches below existing grade for a nine (9) inch deep LPP trench system). Shallow disposal trenches (placed not less than nine (9) inches into the original soil profile) may be used with a capping fill to achieve the minimum separation distance specified above. The capping fill, if required, shall be placed in accordance with these Regulations (see Exhibit O). A capping fill cover is required for all LPP treatment and disposal systems with trench depths less than 18 inches.

5.3.12.2.4 Earthen dams shall be designed at the beginning of each trench and subsequent dams spaced at a maximum of 20 feet thereafter.

5.3.12.2.5 Lateral lines of the LPP treatment and disposal system which are placed on lower landscape positions shall have an interceptor drain installed upslope of the uppermost lateral to intercept and divert surface and subsurface waters away from the absorption facility as determined by a Class D licensee.

5.3.12.2.6 There shall be no soil disturbance to the proposed disposal area except the minimum required for installation. The soils may be rendered unsuitable should unnecessary soil disturbance occur. Particular care should be taken when clearing wooded lots so as not to remove the surface soil material (see Lot Clearing Guidelines).

5.3.12.2.7 LPP treatment and disposal systems shall be installed only with equipment approved by DNREC.

5.3.12.2.8 LPP treatment and disposal systems shall not be allowed where sand lining is required or where soils have been filled or disturbed.

5.3.12.2.9 Percolation Rate: 0 - 120 mpi: Construction on soils with percolation rates > 120 mpi is not permitted. A pressurized distribution system is required in all cases.

5.3.12.3 **All Wisconsin At-Grade Treatment and Disposal Systems shall be designed in accordance with the following criteria (see Exhibit U & V).**

5.3.12.3.1 Landscape Position: Areas with good surface drainage which allow surface water to run off easily without ponding and are not prone to flooding. They shall not be prescribed in coastal beach sands due to the high probability of wind/water erosion and short effluent retention time in the coarse sands.

5.3.12.3.2 Slope: 0 – 3% for soils with percolation rates faster than 75 mpi, unless otherwise approved by the Department.

5.3.12.3.3 Depth to Limiting Zone: ≥ 24 inches to evidence of a limiting zone. Replacement systems must have a limiting zone ≥ 20 inches and in soils without an umbric epipedon or prone to ponding and/or flooding. Class D soil scientist shall verify these site characteristics are applicable prior to prescribing the Wisconsin at-grade as a disposal option. The soil scientist must also specify the percolation rate for each soil horizon to a depth of 36 inches and the incremental loading rates for the first 20 inches of soil (see Exhibit V).

5.3.12.3.4 Percolation Rate: 0 - 75 mpi: Construction on soils with percolation rates > 75 mpi is not permitted. A pressurized distribution system is required in all cases.

5.3.12.4 **All Elevated Sand Mound Treatment and Disposal Systems shall be designed in accordance with the following criteria (see Exhibit Q).**

5.3.12.4.1 Landscape Position: Areas with good surface drainage which allow surface water to run off easily without ponding and are not prone to flooding.

5.3.12.4.2 Slope:

5.3.12.4.2.1 0 – 6% for soils with percolation rates slower than 60 mpi.

5.3.12.4.2.2 0 – 12% for soils with percolation rates faster than 60 mpi.

5.3.12.4.3 Depth to Limiting Zone: > 20 inches to evidence of a limiting zone.

5.3.12.4.4 Percolation Rate: 0 - 120 mpi: Construction on soils with percolation rates > 120 mpi is not permitted. A pressurized distribution system is required in all cases.

5.3.12.5 **All Pressure-Dosed Full Depth and Capping Fill Treatment and Disposal Systems shall be designed in accordance with the following criteria except LPP systems (see Exhibits R & S).**

5.3.12.5.1 Landscape Position: Areas with good surface drainage which allow surface water to run off easily without ponding and are not prone to flooding.

5.3.12.5.2 Slope: 0 – 15%. Bed systems cannot be sited on slopes > 2%, unless otherwise approved by the Department. All designs must be constructed with level bottoms and shall prohibit equipment from entering the excavation. Slopes in excess of 15% shall incorporate construction procedures such as, but not limited to, equipment to be used, installation methods (e.g. trenches on contour, one trench at a time), and proper site restoration.

5.3.12.5.3 Depth to Limiting Zone: ≥ 48 inches from original grade and three (3) feet below bottom of filter aggregate (e.g. a minimum of five (5) feet below existing grade for two (2) foot deep trench and bed systems).

5.3.12.5.4 Percolation Rate: 0 - 120 mpi. Construction on soils with percolation rates > 120 mpi is not permitted. A pressurized distribution system is required in all cases.

5.3.12.6 **All Sand-lined Treatment and Disposal Systems shall be designed in accordance with the following criteria (see Exhibit T).**

5.3.12.6.1 Landscape Position: Areas with good surface drainage which allow surface water to run off easily without ponding and are not prone to flooding.

5.3.12.6.2 Slope: 0 – 15%. Slopes in excess of 15% shall only be allowed if the design is prepared by a Class C designer. Any such design shall incorporate construction procedures.

5.3.12.6.3 Depth to Limiting Zone: ≥ 48 inches from original grade and three (3) feet below bottom of filter aggregate (except for impermeable, slowly permeable, or very slowly permeable materials proposed for removal). Sand-lined systems shall not be used where there is less than one (1) foot of undisturbed native soil between the limiting zone after excavation and the impermeable or slowly permeable soil zone. Sand-lining will not be permitted into the water table, except in instances where it is necessary for replacement systems to function hydraulically.

5.3.12.6.4 Percolation Rate: 0 - 120 mpi. A pressurized distribution system may be required. The percolation test shall be taken in the permeable soil below the impermeable or less permeable soil zone. The bottom of the percolation test hole shall extend a minimum of six (6) inches below the slowly permeable soil zone but in no case shall it be < six (6) inches above the underlying limiting zone. If the percolation tests are to be conducted at a depth too deep to obtain accurate percolation rates, a percolation rate based on USDA soil textures shall be assigned (see Exhibit W). Otherwise, hydraulic conductivity tests may be substituted.

5.3.12.6.5 Sand-lined systems may be used where the site evaluation has shown that there is an impermeable, slowly, or very slowly permeable soil zone located over an acceptable soil. Use of this system requires removal of that zone within the disposal area and its replacement with a sandy fill as prescribed under Section 5.4.2.1. The system shall be constructed in accordance with specifications for sand-lined seepage trenches and beds (see Exhibit S). Installation may require a Class D soil scientist on site to monitor depth of sand lining and proper interfacing of the sandy fill with the native soils.

5.3.12.7 Artificially Drained Systems

5.3.12.7.1 Disposal systems shall not be constructed on sites where curtain drains, vertical drains, under drains, or similar drainage methods are utilized to artificially lower the level of the water table to meet the requirements of these Regulations. Observation wells may be used to demonstrate the change in the hydrology of a particular property for the purpose of siting an on-site wastewater treatment and disposal system.

5.3.13 Building Sewers

5.3.13.1 The minimum requirements contained in this Section shall apply to all conduits, pipes or sewers which transmit wastewater flows from building or house drains to a septic tank (or other treatment device) and from the septic tank (or other treatment device) to the distribution box, lift station or dosing tank. Collection systems servicing three (3) or more units shall be in conformance with National Standards.

5.3.13.2 Building sewers shall comply with the following requirements:

5.3.13.2.1 Location: A minimum horizontal separation of 10 feet shall be provided between a house or building sewer and any water line. Suction lines from wells shall not cross under house or building sewers.

5.3.13.2.2 Size: Building sewers shall be sized to serve the expected flow from the connected fixtures. All building gravity sewer plumbing shall be at least as large as the internal building plumbing but in no case less than three (3) inches in diameter. Pressure building sewers transmitting wastewater to a septic tank (or other device) shall be a minimum of two (2) inches in diameter.

5.3.13.2.3 Foundation: All building sewers shall be laid on a firm compacted bed through its entire length. Building sewers placed in wet soil shall have a four (4) inch bedding of $^{3}/_{4}$" to $1^{1}/_{2}$" aggregate.

5.3.13.2.4 Materials: Building sewers shall be constructed of Sch. 40 or Sch. 80 PVC, reinforced concrete, or Sch. 40 or Sch. 80 ABS pipe. PVC pipe encased in six (6) inches of concrete or sleeved within a larger sized Sch. 40 or Sch. 80 pipe shall be used for building sewers located < three (3) feet below driveways, parking area, or other areas subject to vehicular traffic or similar loading. The sleeving or encasement shall extend a minimum of two (2) feet beyond the edge of driveways, parking areas, or other areas subject to vehicular traffic or similar loading and shall be adequately bedded.

5.3.13.2.5 Joints: All pipe joints shall be watertight and protected against external and internal loads.

5.3.13.2.6 Grade: A building sewer shall be installed in a straight line to the maximum extent practicable with a uniform continuous grade not less than $^{1}/_{8}$ inch/foot, unless it can be demonstrated to the satisfaction of the Department that an alternative design can maintain adequate flow from the source and is approvable under the applicable local building code.

5.3.13.2.7 Cleanouts: Building sewer cleanouts shall be installed at minimum intervals of 50 feet for three (3) inch diameter pipe and 100 feet for four (4) inch and larger diameter pipe. Cleanouts shall be provided at all changes in direction greater than 45°. Wherever possible, bends should be limited to 45°. Every house or building sewer shall have at least one (1) cleanout fitting to provide access to the plumbing. Cleanouts may be placed at greater distances provided National Standards are used to design the total collection system.

5.3.14 Septic Tanks

5.3.14.1 The standard wastewater treatment system used for on-site wastewater treatment and disposal shall be the dual compartment septic tank. All concrete septic tanks must be certified through the On-Site Wastewater Accreditation Program (OWAP) of the National Precast Concrete Association (NPCA) which assures long-lasting, structurally sound and watertight septic tanks. This requirement will become effective one (1) calendar year from date of promulgation of these Regulations.

5.3.14.2 All septic tank treatment units shall be designed in accordance with Exhibit G and comply with standards for septic tanks as prescribed in these Regulations (see Section 5.4.3).

5.3.14.3 The location of septic tanks shall be in accordance with the minimum isolation distances set forth in these Regulations as prescribed in Exhibit C. Septic

tanks shall be located to avoid large elevational differences in order to facilitate periodic pumping.

5.3.14.4 The minimum liquid working capacity of septic tanks shall be:

5.3.14.4.1 For flows ≤ 500 gpd the minimum liquid working capacity shall be 1,000 gallons.

5.3.14.4.2 For flows > 500 gpd but < 2,500 gpd shall have a working capacity of 1.5 times the expected flow rate with a minimum liquid working capacity of 1,500 gallons.

5.3.14.5 If large flow surges are anticipated the septic tank shall be increased in size to accommodate the surges without causing sludge or scum to be discharged from the tank.

5.3.14.6 All tanks shall be watertight, non-corrosive, durable and structurally sound. Materials of construction for tanks shall be one of the following:

5.3.14.6.1 Pre-cast reinforced concrete; or

5.3.14.6.2 Other suitable material approved as equal by and at the sole discretion of the Department.

5.3.14.6.3 Metal tanks are not a suitable material.

5.3.14.7 All septic tanks shall be of multi-compartment design with a minimum of two (2) compartments. The first compartment of a two (2) compartment tank shall contain two thirds ($^2/_3$) the liquid capacity of the total volume of the tank. Tanks shall be of rectangular design.

5.3.14.8 Pre-cast reinforced concrete tanks shall have a minimum wall thickness of two and one half (2½) inches.

5.3.14.9 All inlet and outlet connections shall be sanitary tees or baffles constructed of pre-cast concrete or PVC. Inlet openings may have a minimum diameter equivalent to the diameter of the house sewer but in no instance shall the diameter be less than three (3) inches. The outlet invert shall be two (2) inches below the inlet invert. The inlet and outlet baffles or sanitary tees shall extend at least 12 inches below the liquid level, but to a level no deeper than 40% of the liquid depth. Baffles or sanitary tees are not necessary for any portion of the tank if it is to be used as a pumping chamber.

5.3.14.10 All pipe cutouts for inlet and outlet connections shall be sealed with a watertight concrete (95%) & bentonite (5%) grout mix or standard rubber gaskets.

5.3.14.11 Connections between compartments of multi-compartment tanks shall consist of a four (4) inch diameter sanitary tee or baffle constructed of concrete. All compartment connections shall extend to a level no deeper than 40% of the liquid depth as measured from the liquid level.

5.3.14.12 All inlet, outlet and inter-compartment connections shall be located to provide a minimum air space of one (1) inch between the top of the connection and the underside of the tank cover.

5.3.14.13 Each tank compartment shall be equipped with an access opening and cover. The opening shall be located to provide access to each tank compartment as well as providing access to the inlet and outlet connections for routine inspections. Access openings shall be at least 20 inches square or in diameter.

5.3.14.14 Each septic tank shall be constructed with a watertight access riser for each compartment and shall extend above grade at the time of installation. The riser and lid shall be made of concrete, masonry or an equivalent durable material

approved by the Department. If multiple concrete risers are needed then water tight gaskets or hydraulic cement must be placed between each riser.

5.3.14.15 All above finished grade access covers shall be water tight and secure from vandalism.

5.3.14.16 All septic tanks shall be equipped with any outlet effluent filter approved by the Department. The maintenance of these filters is the responsibility of the property owner and must remain in service for the life of the septic tank. This unit must be maintained in accordance with the manufacturer's service instructions.

5.3.14.17 All installations of septic tank treatment units shall be in accordance with Section 5.4.3.

5.3.15 Grease Traps

5.3.15.1 Grease traps shall be utilized for commercial and industrial wastewater sources at the sole discretion of the Department to assure the effectiveness of on-site wastewater treatment and disposal systems. Grease interceptors shall not be approved for new construction designs as replacement for the grease trap. Grease interceptors may be allowed for replacement systems when there are site limitations and low flow applications at the sole discretion of the Department.

5.3.15.2 All grease traps shall be designed in accordance with the following requirements:

5.3.15.2.1 The minimum size grease trap shall be 1,000 gallons (see Exhibits E & F) and be certified through the On-Site Wastewater Accreditation Program (OWAP) of the National Precast Concrete Association (NPCA).

5.3.15.2.2 The location of grease traps shall be in accordance with the minimum isolation distances set forth in these Regulations as prescribed in Exhibit C.

5.3.15.2.3 The sizing of grease traps shall be based on wastewater flow data and grease retention capacity. The grease retention capacity in pounds shall be equal to at least twice the peak flow capacity in gallons per minute. The flow capacity can be determined from the individual flows from fixtures discharging into the grease trap. Exhibit E contains the minimum flow rate fixture capacities which shall be used for grease trap designs when actual calibrated metered flow data indicating peak daily flows over a three (3) year period are not available.

5.3.15.2.4 All grease traps shall have multiple compartments.

5.3.15.2.5 All inlet and outlet connections shall be sanitary tees or baffles constructed of pre-cast concrete or PVC. Inlet and outlet openings shall be a minimum of four (4) inches in diameter. The outlet invert shall be two (2) inches below the inlet invert. The inlet baffle or sanitary tee shall extend at least 24 inches below the liquid level. The bottom of the outlet baffle or sanitary tee shall be eight (8) inches above the tank bottom.

5.3.15.2.6 Connections between compartments of multi-compartment tanks shall consist of a four (4) inch diameter sanitary tee or baffle constructed of concrete. The bottom of the sanitary tee shall be 12 inches above the tank bottom.

5.3.15.2.7 The requirements of Section 5.3.14.6, 5.3.14.8, 5.3.14.9, 5.3.14.11, 5.3.14.13, 5.3.14.14, 5.3.14.15 and 5.3.14.16 shall apply to all grease traps approved in accordance with these Regulations.

5.3.15.2.8 All installations of grease traps shall be in accordance with the requirements of Section 5.4.3 and testing shall be conducted in accordance with Section 5.4.3.6 of these Regulations.

5.3.15.2.9 Grease traps must have access above grade.

5.3.15.2.10 A copy of a contract with a licensed Class F liquid waste hauler consisting of the following conditions, as a minimum:

5.3.15.2.10.1 Duration of contract.

5.3.15.2.10.2 Pumping schedule.

5.3.15.2.10.3 Availability of equipment.

5.3.15.2.10.4 Emergency response capability.

5.3.15.2.10.5 Contents will be disposed of in a manner and at a facility or location approved by the Department.

4.3.15.2.10.6 Evidence that the owner or operator of the proposed disposal facility will accept the pumping for treatment and disposal.

5.3.16 Lift Stations

5.3.16.1 Lift stations, as defined in Section 2.0, shall be utilized for residential and commercial wastewater systems to overcome elevational differences for conveying effluent to another system component for gravity distribution and comply with standards for septic tanks as prescribed in these Regulations (see Section 5.4.3).

5.3.16.2 The location of the lift station shall be in accordance with the minimum isolation distances set forth in these Regulations as prescribed in Exhibit C and be certified through the On-Site Wastewater Accreditation Program (OWAP) of the National Precast Concrete Association (NPCA).

5.3.16.3 Lift stations/packages must be approved by the Department prior to use.

5.3.16.4 The requirements of Sections 5.3.14.1, 5.3.14.6, 5.3.14.8, 5.3.14.10, 5.3.14.12, 5.3.14.13, 5.3.14.14, 5.3.14.15, 5.3.17.7, 5.3.17.8, 5.3.17.10, 4.3.17.12 and 5.3.17.13 shall apply, where applicable, to all lift station tanks approved in accordance with these Regulations.

5.3.16.5 All inlet pipe connections shall be located above the high water level as pre-determined by the pump installation.

5.3.16.6 Check valves shall be required in all lift stations.

5.3.16.7 All installations of stand-alone lift station vaults shall be in accordance with these Regulations.

5.3.16.8 Demand dose (designed volume by draft/float) shall not exceed 30 gallons. If large flows are anticipated, larger demand dose float settings will be considered.

5.3.16.9 Maximum gated/metered flow shall be 20 gallons per minute.

5.3.16.10 Calculations required to be submitted with the application shall include static head (elevational differences) and frictional pipe losses. Manufacturer's cut-sheets for the prescribed pump and alarm, including pump curve, must also attend permit application.

5.3.16.11 Lift stations designed to convey solid waste (waste generated prior to pretreatment tanks/units) must incorporate pumps capable of handling minimum two (2) inch solids.

5.3.17 Dosing Chambers (see Exhibit I)

5.3.17.1 <u>Location:</u> Dosing chambers shall be located in compliance with the minimum isolation distances of these Regulations (see Exhibit C) and comply with standards for septic tanks as prescribed in these Regulations (see Section 5.4.3).

5.3.17.2 <u>Size/Capacity:</u> The dosing chamber shall have a minimum liquid capacity equal to the designed dose volume plus the design daily flow.

5.3.17.3 The requirements of Sections 5.3.14.6, 5.3.14.8, 5.3.14.9, 5.3.14.13, 5.3.14.14 and 5.3.14.16 shall apply to all dosing chambers approved in accordance with these Regulations and must be certified through the On-Site Wastewater Accreditation Program (OWAP) of the National Precast Concrete Association (NPCA).

5.3.17.4 All inlet pipe connections shall be located above the high water level as predetermined by the pump installation.

5.3.17.5 All pipe cutouts shall be sealed with a watertight concrete (95%) & bentonite (5%) grout mix or standard rubber gaskets.

5.3.17.6 Dosing chambers shall be constructed with a ventilation port and a watertight access manhole. The ventilation port shall be extended at least six (6) inches above finished grade while the access manhole shall also be extended above finished grade. The Department recommends six (6) inches above existing grade, at a minimum, at time of installation. The vent shall be three (3) inches in diameter and the access manhole shall be sized for easy removal of pumps. In no case shall the manhole be less than 20 inches square or in diameter. The vent shall be turned down and shall be fitted with insect and rodent proof, corrosion resistant screen.

NOTE: PVC pipe caps drilled with holes is not a permissible substitute for the screen.

5.3.17.7 Pumps which are suitable for handling septic tank effluent shall be used to meet dosing requirements and shall be installed in accordance with the manufacturer's recommendations.

5.3.17.8 Dosing chambers using pumps shall have an installed pump for which a replacement is readily available in the event of failure.

5.3.17.9 Pumps shall be sized to discharge a flow rate equal to the combined flows from all discharge holes in the laterals when operating at designed level or head.

5.3.17.10 Pumps and valves shall be equipped with suitable connections so that they may be removed for inspection or repair without entering the dosing chamber. A slide rail system or disconnect coupling accessible from outside the dosing chamber shall be utilized to allow removal and access to the pump and pump check valve for repairs and maintenance. A corrosion-proof lifting device shall be attached to the pumps and tied off at the access manhole.

5.3.17.11 Check valves shall be required on all pressure distribution systems.

5.3.17.12 An audible and visual high level warning device shall be installed for all pumps and shall be installed on a separate AC circuit from the pump.

5.3.17.13 All pump electrical connections and alarm controls shall be NEMA 4x rated corrosion resistant and waterproof. The bottom of the control panel shall be a minimum of 24 inches above finished grade within direct line of sight of the pump or treatment device being operated.

5.3.17.14 All control panels shall be UL listed.

5.3.17.15 All AC circuits shall have properly sized circuit breakers installed in the control panel.

5.3.17.16 Elevations for pump controls and high water level sensor elevations shall be provided in the design.

5.3.17.17 Testing: All dosing chambers shall be field tested to ensure watertight conditions. Pumps, alarm controls and related appurtenances shall also be field tested to ensure accuracy and proper operation in accordance with the manufacturer's recommendations. A minimum schedule for periodic testing and

calibration of the dosing chambers, pumps, alarm controls and related appurtenances shall be established and incorporated into the permit. All installed pumps shall be accompanied by instruction manuals that include operation and maintenance procedures and pump characteristics.

5.3.18 Holding Tanks

5.3.18.1 The use of a holding tank is an unusual circumstance wherein all wastewater is permitted to be held in a watertight structure until it is pumped and transported by vehicle to a point of disposal. The use of a holding tank on a permanent basis is prohibited except as provided in these Regulations.

5.3.18.2 Permanent holding tanks are not permitted on unimproved lots.

5.3.18.3 No person shall install a holding tank without first obtaining a permit from the Department.

5.3.18.4 All holding tank permit applications and designs must be completed by a Class C designer. All holding tanks must be certified through the On-Site Wastewater Accreditation Program (OWAP) of the National Precast Concrete Association (NPCA).

5.3.18.5 Permits may be issued, by the Department, for the permanent use of holding tanks when all of the following conditions are met:

5.3.18.5.1 The site is improved with a dwelling and has been evaluated for all means of on-site wastewater treatment and disposal, including innovative/alternative, and has been deemed not suitable for an on-site wastewater treatment and disposal system.

5.3.18.5.2 No community or area-wide central wastewater system is available or expected to be available within five (5) years.

5.3.18.5.3 The same isolation distances as required for septic tanks can be met.

5.3.18.5.4 The owner(s) contract(s) with a licensed Class F liquid waste hauler to provide hauling services to the dwelling for the period it is utilized or until connection can be made to an approved wastewater facility. Should the owners change waste haulers, a new contract shall be submitted to the Department.

5.3.18.5.5 The property deed shall be amended with an Affidavit of Ownership at the time of permit issuance, which states that the dwelling is served by a permanent holding tank. The Affidavit of Ownership must be recorded at the Recorder of Deeds.

5.3.18.5.6 When the governmental unit or wastewater utility provides the hauling services directly, it shall conform to the requirements for liquid waste haulers.

5.3.18.5.7 Have a water meter installed to measure the in-flow of water into the building or house or a metering device measuring the flow to the tank.

5.3.18.6 In an area under the control of a governmental unit, or a wastewater utility which has a recorded covenant with the owner that runs with the land, either of which is authorized to construct, operate, and maintain a large or area-wide central wastewater system, a holding tank may be installed for temporary use provided:

5.3.18.6.1 The application for permit includes a copy of a legal commitment from the governmental unit or wastewater utility that within five (5) years from the date of application the governmental unit or wastewater utility will extend to the property covered by the application, a large or area-wide central wastewater system meeting the requirements of the Department.

5.3.18.6.2 The large or area-wide central wastewater system has received the necessary approvals for full operation (established sewer district or CPCN) which includes the anticipated flow to the holding tank.

5.3.18.6.3 The proposed holding tank will comply with the requirements of these Regulations and tank sizing is at the discretion of the Department.

5.3.18.7 Temporary use of a holding tank may be approved when:

5.3.18.7.1 Installation of an approved on-site system has been delayed by weather conditions; or

5.3.18.7.2 The tank is to serve a temporary construction site (up to five (5) years).

5.3.18.8 Applications for holding tank installation shall contain plans and specifications in sufficient detail for each holding tank proposed to be installed and shall be submitted to the Department for review and approval. The application for a permit shall be on forms provided by the Department and contain the following items:

5.3.18.8.1 A copy of a contract with a licensed Class F liquid waste hauler shall contain, as a minimum, the following conditions:

5.3.18.8.1.1 Duration of contract.

5.3.18.8.1.2 Pumping schedule.

5.3.18.8.1.3 Availability of equipment.

5.3.18.8.1.4 Emergency response capability.

5.3.18.8.1.5 Contents will be disposed of in a manner and at a facility or location approved by the Department.

5.3.18.8.1.6 Evidence that the owner or operator of the proposed disposal facility will accept the pumping for treatment and disposal.

5.3.18.8.1.7 Method of measuring wastewater use (water meter, wastewater meter, etc.).

5.3.18.8.2 A record of pumping dates and the amounts pumped shall be maintained by both the property owner and the liquid waste hauler, and be made available to the Department along with in-flow meter readings as part of the annual renewal of the permit.

5.3.18.8.3 The appropriate annual inspection fee.

5.3.18.9 Each holding tank shall:

5.3.18.9.1 In no case have a capacity less than seven (7) days average flow from the wastewater generating facility or 2,800 gallons, whichever is larger unless authorized by the Department. When holding tanks are designed to serve the needs of a community or large system, the size shall be in conformance with standard engineering practice as determined by the Department and in accordance with an acceptable monitoring and pumping schedule.

5.3.18.9.2 Comply with standards for septic tanks as prescribed in these Regulations (see Section 5.4.3).

5.3.18.9.3 Be located and designed to facilitate removal of contents by pumping.

5.3.18.9.4 Be equipped with both an audible and visual alarm installed on an AC circuit and placed in a location, acceptable to the Department, to indicate when the contents of the tank are at 75% of capacity.

5.3.18.9.5 Have no vent at an elevation lower than the overflow level of the lowest fixture served.

5.3.18.9.6 Be designed for anti-buoyancy if test hole examination or other observations indicate that seasonally high groundwater may float the tank when empty.

5.3.18.9.7 Be constructed of the same materials approved for septic tanks. Holding tanks shall be watertight and structurally sound to withstand internal and external loads.

5.3.18.9.8 Be equipped with a 20 inch diameter or square access opening. The access opening shall be extended to a minimum of six (6) inches above grade level at time of installation.

5.3.18.9.9 All alarms shall be tested for proper operation.

5.3.18.10 Each holding tank installed under these Regulations shall be inspected annually. A fee shall be charged for each annual inspection and all required documentation shall be submitted also.

5.3.18.11 No liquid waste from a holding tank shall be applied directly or indirectly onto the ground surface or into surface waters.

5.3.18.12 Prior to purchase of a dwelling that is currently served by a holding tank or is proposed to be served by a holding tank, the prospective buyer must sign an Affidavit of Understanding of the terms and conditions associated with use of a holding tank. This Affidavit shall be submitted to the Department to be filed with the permit and a copy of the affidavit shall be provided to the prospective buyer.

5.3.19 Spare Area

5.3.19.1 Each site utilizing an on-site wastewater treatment and disposal system shall have sufficient area to accommodate a complete replacement system or an acceptable alternative approved by the Department which satisfies the requirements of these Regulations. This area shall be maintained so that it is free from encroachments by accessory buildings and additions to the main building. Encroachment shall include the 10 foot isolation distance to buildings as required by these Regulations. This requirement may be waived if the application for a permit includes a copy of a legal commitment from the governmental unit that states that within five (5) years from the date of the application the governmental unit will extend to the property a community or area-wide central wastewater system meeting the requirements of the Department or an acceptable alternative is approved by the Department. The community or area-wide central wastewater system has received the necessary approvals for full operation which includes the anticipated flow to the on-site wastewater treatment and disposal system.

5.3.20 System Permit Applications

5.3.20.1 Permit applications must be designed in accordance with the prescribed system type and design considerations as specified in an approved site evaluation for that parcel.

5.3.20.2 Applications for permits shall be made by the owner of the property or owner's legally authorized agent on forms approved by the Department.

5.3.20.3 An application is complete only when the form is completed in full, signed by the owner or owner's legally authorized agent, accompanied by all required exhibits (provided an approved unexpired site evaluation report is on file) and fee. Additionally an approval letter from the appropriate governmental unit having

jurisdiction that states the local governmental unit has approved the activity by zoning be submitted. Incomplete applications will not be processed and may be returned.

5.3.21 The completed application shall include, at a minimum, the following site information:

5.3.21.1 Parcel and/or lot dimensions and size with a location map of project site.

5.3.21.2 Slope - in absorption facility and replacement areas (percent and direction).

5.3.21.3 Existing wells within 150 feet of the proposed system.

5.3.21.4 Any and all watercourses or bodies of water.

5.3.21.5 Distances of the existing and/or proposed on-site well(s) and absorption facilities from the nearest two reference points or established survey control.

5.3.21.6 Soil boring and test pit locations along with limits of approved area as indicated in the approved site evaluation.

5.3.21.7 Owner/Agent signature on plot plan drawing, straight edge must be used (no free-hand lines), to scale (acceptable scales are: 1 inch = 10, 20, 30, 40, 50, 60 and 100 feet), north arrow or compass rose and certification that designer site checked the property to confirm no changes have taken place since site evaluation was approved. Designer's signature is certification that site check was performed.

5.3.21.8 Any other information required to satisfy these Regulations.

5.3.22 A permit shall be issued only to the owner or easement holder of the land on which the system is to be installed.

5.3.23 The Department shall either issue or deny the permit within 20 working days after receipt of the completed application. However, if conditions prevent the Department from acting to either issue or deny the permit within 20 working days, the applicant shall be notified. The Department shall either issue or return the permit within 30 working days after the mailing date of such notification.

5.3.24 All permits issued for on-site wastewater treatment and disposal systems pursuant to these Regulations shall be effective for two (2) years from the date of issuance except component replacement, repair and authorization to use existing system permits which are effective for one (1) year only. If the system has been started the Department may issue a limited time period extension and an additional fee will be charged. A one year extension will, if requested, be granted by the Department upon demonstration by the applicant that no changes have occurred in system design, siting, or regulations applicable to the permit since the permit was issued and written certification to such factual findings is provided and all appropriate fees are paid.

5.3.25 If any portion of the approved disposal area is disturbed during site construction activities, through grubbing, tree removal or other activities utilizing heavy equipment, a Class E system contractor must submit a certification document prepared by a Class D soil scientist on a form provided by the Department (see Exhibit FF) which states whether the area is suitable for installation or not. If not suitable, additional soil borings or test pits shall be performed within the disturbed area(s) to substantiate the initial site evaluation and a review fee will be charged.

5.3.26 The Department shall deny the permit if:

5.3.26.1 The application contains false information.

5.3.26.2 The proposed system would not comply with these Regulations.

5.3.26.3 The proposed system, if constructed, would violate a Department moratorium.

5.3.26.4 A central wastewater system which can serve the proposed wastewater flow is both legally and physically available as described in Sections 3.31.9, 3.31.10 and 3.31.11 of these Regulations.

5.3.26.5 Construction of an on-site wastewater treatment and disposal system is prohibited by codes, ordinances or county or municipal regulations having jurisdiction.

5.3.27 Permit Denial Review

5.3.27.1 The Department shall make a decision on the application which it determines will best implement the purposes of 7 **Del.C.** Ch. 60 and these Regulations. Providing of the requisite information in the application procedure by the applicant shall not be construed as a mandatory prerequisite for the issuance of the permit by the Department.

5.3.28 Authorization to Use an Existing System Permit

5.3.28.1 Application for an Authorization to Use an Existing System Permit shall be made on forms provided by the Department and shall be accepted only when the forms are complete.

5.3.28.2 No person shall place into service, change the use of or increase the projected daily wastewater flow above design standards into an existing system without first obtaining an Authorization to Use an Existing System, Repair, Component Replacement or Replacement System Permit(s) as required by these Regulations.

5.3.28.3 An Authorization to Use an Existing System Permit is not required:

5.3.28.3.1 Where there is a replacement of a manufactured home with similar units in manufactured home communities with on-site wastewater treatment and disposal systems when an annual inspection has taken place by the Department or an authorized designee certifying that the existing system(s) is/are not malfunctioning.

5.3.28.3.2 For use of a previously unused system for which a Certificate of Satisfactory Completion has been issued within one (1) year of the date that such system is placed into service, provided the projected daily wastewater flow does not exceed the design flow.

5.3.28.4 For changes in the use of an existing system where no increase in wastewater flow above design standards is projected or where the design flow is not exceeded an Authorization to Use an Existing System Permit shall be issued if:

5.3.28.4.1 The existing system does not incorporate a cesspool or seepage pit.

5.3.28.4.2 The existing system is not malfunctioning and is not in need of repair.

5.3.28.4.3 All isolation distances from the existing system can be maintained.

5.3.28.4.4 The proposed use would not create a public health hazard.

5.3.28.4.5 In cases where the Department has no record of an existing on-site wastewater treatment and disposal system permit, a Class H system inspection has been performed, documentation of such inspection has been submitted to the Department, and the results either meet or exceed the regulations governing such use or an inspection of the existing system by the GDS has been performed provided the following are uncovered and found to meet or exceed the regulations governing such use:

5.3.28.4.5.1 Septic tank.

5.3.28.4.5.2 Distribution box or supply manifold.

5.3.28.4.5.3 Beginning and end of all trenches or the four (4) corners of the bed (additional area may be required after inspection depending upon proposed use). A minimum of two (2) distribution laterals in a trench or bed absorption facility is required.

5.3.28.4.6 The system had been operated in violation of these Regulations but a Repair and/or Component Replacement Permit and subsequent Certificate of Satisfactory Completion are issued.

5.3.28.5 If the conditions of Section 5.3.28.4 cannot be met, an Authorization to Use an Existing System Permit shall be withheld until such time as the appropriate inspections, Repair and/or Component Replacement Permit(s) are obtained and subsequent Certificate of Satisfactory Completion are issued.

5.3.28.6 If changes in the proposed use of a system would increase the daily wastewater flows above design criteria an Authorization to Use an Existing System Permit would not be issued and a Replacement System Permit would then be required.

5.3.28.7 Applications for connections to existing systems that propose adding additional bedrooms will be considered on a case by case basis.

5.3.28.8 The Department may allow a manufactured home to use an existing system serving another dwelling, in order to provide temporary housing for a family member suffering hardship, by issuing an Authorization to Use an Existing System Permit, if:

5.3.28.8.1 The Department receives proof, in writing, from a doctor or hospital which indicates the family member is suffering physical or mental impairment, infirmity, or is otherwise disabled and is in need of temporary housing.

5.3.28.8.2 The system is not malfunctioning.

5.3.28.8.3 The application is for a manufactured home.

5.3.28.8.4 Evidence is provided that a hardship manufactured home placement is allowed on the subject property by the governmental agency that regulates zoning, land use planning, and construction.

5.3.28.9 An Authorization to Use an Existing System Permit issued for personal hardship shall remain in effect for a specified period, not to exceed cessation of the hardship. The Department shall impose conditions in the Authorization to Use an Existing System Permit that are necessary to ensure protection of public health. If the system fails and additional replacement area is no longer available, the manufactured home must be removed from the property.

5.3.29 Repair and Replacement of Malfunctioning Systems

5.3.29.1 Steps to repair and/or replace a component or malfunctioning system shall be initiated immediately and continued until system repair is completed. However, if, at the sole discretion of the Department, it is determined that adverse soil conditions exist due to climatic conditions that would likely preclude a successful repair, component or replacement system installation, the Department may allow a delay in commencing repairs or replacement until the soil conditions improve. If this allowance is made, a compliance date and interim system maintenance requirements shall be specified in system construction deficiencies to the system owner.

5.3.29.2 No person shall repair a malfunctioning system without first obtaining a Repair or Component Replacement Permit except as permitted in Section 5.3.29.6. In no case shall a repair and/or component replacement be made to a cesspool or seepage pit or tank(s) associated with a cesspool/seepage pit unless approved by

the Department. Repairs made to such systems will be considered on a case by case basis and if granted will require the issuance of a hardship permit with conditional use.

5.3.29.3 Upon completion of installation of that part of a system for which a Repair, Component Replacement or System Replacement Permit has been issued, the permittee shall obtain a Certificate of Satisfactory Completion from the Department.

5.3.29.4 The following criteria for a Repair, Component Repair or System Replacement Permit shall apply:

5.3.29.4.1 If the site characteristics and standards described in these Regulations can be met, then the repair and/or installation shall conform to them.

5.3.29.4.2 If the site characteristics or standards described in these Regulations cannot be met, the Department may allow a repair or replacement installation in order to eliminate a public health hazard. Repairs or replacements may require the installation of an innovative/alternative system in order to eliminate a public health hazard. In such cases the Department shall use its best professional judgment in approving repairs or replacements that will reasonably enable the system to function properly.

5.3.29.5 Malfunctioning systems that cannot be repaired shall be abandoned in accordance with these Regulations.

5.3.29.6 Emergency Repairs

5.3.29.6.1 Emergency repairs are considered emergencies only when Department offices are not open for business. Repairs and component replacements required as a result of Class H inspections do not constitute an emergency by definition and therefore are subject to normal permit application procedures.

5.3.29.6.2 Emergency component replacements and repairs as specifically defined in these Regulations (see Emergency Permit definition) may be made without first obtaining a permit provided a permit is applied for the first day of normal Department operations following a weekend/holiday. Such a delayed application submittal does not relieve any person, owner or licensee, from complying with these Regulations or subsequent requirements or conditions of approval as may be imposed by the Department. Repairs and/or component replacements made under this initiative are subject to normal inspection protocols as stated in these Regulations and must be made available for inspection after work is completed.

5.3.29.6.3 Emergency component replacements require drainfield verification prior to installation. The absorption facility, either trench or bed, must contain, at a minimum, two distribution laterals of equal length. If a legitimate drainfield is located a Repair or Component Replacement Permit shall be issued provided that:

5.3.29.6.3.1 The existing system is not malfunctioning.

5.3.29.6.3.2 All isolation distances as required by these regulations can be maintained.

5.3.29.6.3.3 The proposed use would not create a public health hazard.

5.3.30 Flow Equalization Requirements

5.3.30.1 Flow equalization systems may be used for non-residential facilities that regularly and predictably operate at less than full capacity. Facilities may be permitted for flow equalization when approved by the Department.

5.3.30.2 Flow Equalization Terms

5.3.30.2.1 Flow equalization cycle is the time period in which wastewater will be stored and dosed.

5.3.30.2.2 Flow event is an occurrence during the flow equalization cycle in which wastewater will be generated.

5.3.30.2.3 Equalized daily flow is the total volume of wastewater generated by flow events at the facility during the flow equalization cycle divided by the number of days in the cycle.

5.3.30.2.4 Flow balance is a daily account of the amount of stored effluent in the equalization tank which is serviced from the incoming flow, residual storage and outgoing flow. The flow balance shows the day of the week, the amount of wastewater generated, the amount of wastewater dosed, and the residual amount of effluent left in the dosing tank each day. At the end of the flow equalization cycle, the sum of the incoming flow shall equal the sum of the amount dosed.

5.3.30.3 System Sizing and Design Criteria

5.3.30.3.1 The septic tank shall be designed to accommodate the largest flow projected in a 24 hour period.

5.3.30.3.2 Equalization dosing tank shall be sized to hold the:

5.3.30.3.2.1 Minimum dose volume required based on the size of drainfield.

5.3.30.3.2.2 Highest cumulative volume of effluent as determined by the flow balance.

5.3.30.3.3 The high water alarm shall be set to activate once the equalization volume is exceeded.

5.3.30.3.4 Drainfield Sizing

5.3.30.3.4.1 The equalized flow shall be calculated by adding the design daily flow for each event in the flow equalization cycle and dividing by the number of days in the cycle. Under this approval the maximum number of equalization days is seven (7).

5.3.30.3.4.2 The drainfield shall be sized by dividing the equalized daily flow by the approved loading rate.

5.3.31 Innovative/Alternative Wastewater Treatment and Disposal Systems

5.3.31.1 Innovative/Alternative on-site wastewater treatment and disposal systems may be appropriate for areas where site constraints limit the suitability for conventional system types. The Department shall consider applications for innovative/alternative wastewater treatment and disposal systems on a case by case basis. It is the policy of the Department to pursue a program of experimentation for the purpose of obtaining sufficient data for the development of innovative/alternative wastewater treatment and disposal systems, which may benefit the people of Delaware. For the purposes of this Section, applications for large and/or community systems that employ advanced treatment units which are in conformance with standard engineering practice as determined by the Department shall not be considered innovative/alternative.

5.3.31.2 Sites may be considered for Innovative/Alternative System Permits where:

5.3.31.2.1 Soils, climate, groundwater, or topographical conditions are indicating the seasonal high water table or a limiting condition is encountered deeper than 10 inches below the soil surface or observation well data determines the seasonal high water table is deeper than 10 inches.

5.3.31.2.2 A specific acceptable backup alternative is available in the event of system failure.

5.3.31.2.3 Installation of a particular system is necessary to provide a sufficient sampling data base.

5.3.31.2.4 Zoning, planning, and building requirements allow system installation.

5.3.31.2.5 The system will be used on a continuous basis during the life of the project.

5.3.31.3 Product approvals

Applications for innovative/alternative wastewater treatment and disposal systems shall provide documentation of the capabilities of the proposed system. Such documentation shall be in the form of proven data of long term usage of facilities similar to those specified in these Regulations, or short term documentation from controlled projects from reliable sources such as Universities or the National Sanitation Foundation International. The Department shall approve only treatment and disposal system applications that provide thorough documentation of proven technology. Alternative treatment units with flows < 2,500 gpd shall provide, at a minimum, the treatment levels prescribed for PSN3.

5.3.31.3.1 Application information required for all innovative/alternative systems or protocols must include the following information (see Exhibit EE):

5.3.31.3.1.1 Name, address, phone number, fax number and email address for manufacturer, owner and agent.

5.3.31.3.1.2 Executive summary describing the system, stating the type of approval sought, model numbers, and treatment levels, as applicable.

5.3.31.3.1.3 System proposed is fully described with the following information:

5.3.31.3.1.3.1 Construction drawings provided detailing all system components.

5.3.31.3.1.3.2 Specifications describing all materials to be used, methods of construction, means for assuring the quality and integrity of the finished product, and installation procedures.

5.3.31.3.1.3.3 Materials specified for use in construction are equal or superior in physical properties and chemical durability.

5.3.31.3.1.3.4 Any special conditions for use, installation, operation; and monitoring and maintenance that should be conditions of any approval document.

5.3.31.3.1.4 Provide summary of pertinent literature, published research, and previous experience and performance with the system.

5.3.31.3.1.5 Provide other state approvals.

5.3.31.3.1.6 Provide results of any available testing, research or monitoring of pilot systems or full scale operational systems conducted by a third party independent research or testing organization. These independent studies must have adequate research from highly controlled, third party studies with

rigorous research protocols or well documented long term use studies of proven wastewater technologies.

5.3.31.3.1.7 Operation, maintenance and monitoring procedures for system.

5.3.31.3.1.8 Notification given of any proprietary information, system, component, or device.

5.3.31.3.1.9 Local distributor information and contact information.

5.3.31.4 No person shall construct an innovative/alternative on-site wastewater treatment and disposal system without obtaining a permit from the Department. Class E.2 or E.3 system contractors must install innovative/alternative systems.

5.3.31.5 Applications for innovative/alternative systems shall be made to the Department. The application shall be complete, signed by the owner and accompanied by the required fee. The application shall include detailed system design specifications, plans and any additional information requested by the Department.

5.3.31.6 Applications for innovative/alternative wastewater treatment and disposal systems shall include, but not be limited to, the following:

5.3.31.6.1 Volume and rate of wastewater flow.

5.3.31.6.2 Characteristics of the wastewater.

5.3.31.6.3 The degree and extent of treatment expected.

5.3.31.6.4 Design criteria, specifications, and drawings including a description of the system, its capabilities, operation and maintenance requirements, unique technical features and system advantages for treatment systems plus calculations, if applicable.

5.3.31.6.5 Construction materials.

5.3.31.6.6 Operational and maintenance details along with their requirements.

5.3.31.6.7 Class C license is required.

5.3.31.6.8 Any additional information required by the Department.

5.3.31.7 The permit shall:

5.3.31.7.1 Specify method and manner of system installation, mandatory operation and maintenance requirements.

5.3.31.7.2 Specify method, manner and duration of system testing and monitoring, at the Department's discretion.

5.3.31.7.3 Identify when and where the system is to be inspected.

5.3.31.7.4 Require system construction and use within two (2) years of permit issuance.

5.3.31.8 Inspection of all installed systems shall be performed by a Class C designer, Class E.2 or E.3 system contractor, the Department and the manufacturer's representative, if Class E.2 or E.3 system contractor is not certified by the manufacturer for the product. Upon completion of each phase requiring inspection by the permit, the Class E.2 or E.3 system contractor shall notify the Department, the Class C designer and manufacturer's representative, if necessary.

5.3.31.9 The Department may inspect construction at any time to determine whether it complies with permit conditions and requirements.

5.3.31.10 After system installation is complete and the Department has determined that it complies with permit conditions, a Certificate of Satisfactory Completion shall be issued.

5.3.31.11 If the Department finds the operation of the system is unsatisfactory; the owner, upon written notification by the Department shall promptly repair or modify the system, replace it with another acceptable system, or abandon the system.

5.3.31.12 The system will be monitored by the Department and/or the Department's designee in accordance with a schedule contained in the permit and the operation and maintenance requirements in 5.5.5.

5.3.31.13 Should any additional guidelines be developed by the Department, the permittee would be responsible for meeting these guidelines.

5.3.32 Transportation of Non-Hazardous Liquid Waste

5.3.32.1 No person shall haul, convey or transport any non-hazardous liquid waste in any container without a Class F liquid waste haulers license and a Non-Hazardous Liquid Waste Transporters Permit issued by the Department in accordance with 7 **Del.C.** §6003 (a)(2).

5.3.32.2 In order to obtain a Non-Hazardous Liquid Waste Transporters Permit, the applicant must submit a completed application, demonstrate proof of bonding (see Section 5.3.32.4) and adhere to the transportation requirements (see Section 5.3.32.5).

5.3.32.3 The completed application shall include, at a minimum, the following information:

5.3.32.3.1 Company and owner information.

5.3.32.3.2 A list of all Class F licensees working for company.

5.3.32.3.3 A description of all equipment to include collection, short-term holding, handling, and wash down equipment.

5.3.32.3.4 A detailed description of the transport vehicles to include vehicle type, make and model, vehicle year, license number, state of registration, capacity size, number, and all modifications made to prevent spills and leaks.

5.3.32.3.5 Type(s) of non-hazardous liquid waste being transported.

5.3.32.3.6 An operations plan to include transportation route, days and hours of operation, spill reporting and cleanup plans, plans to keeping transportation vehicles clean, and recordkeeping procedures.

5.3.32.3.7 Bonding certification in accordance with Section 5.3.32.4.

5.3.32.3.8 A description of the non-hazardous liquid waste to include; the source of the non-hazardous liquid waste, the quantity to be transported, and any treatment the non-hazardous liquid waste has undergone before transportation.

5.3.32.3.9 The destination of the non-hazardous liquid waste and a description of what is to be done with the non-hazardous liquid waste at the destination and a copy of permit/authorization letter from each disposal facility.

5.3.32.3.10 A permit fee and advertisement fee are required upon submittal of a permit application, in accordance the latest DNREC fee schedule.

5.3.32.3.11 All vehicles used to transport biosolids, septage or non-hazardous liquid waste shall be operated and maintained so as to be in compliance with all state and federal regulations and not present a hazard to human health or the environment through unsafe vehicle conditions. The permittee is responsible for the operation and maintenance of all vehicles operated under the permit.

5.3.32.3.12 All transporters of biosolids, septage or non-hazardous liquid waste shall submit to the Department a plan for the prevention, control, and cleanup of

accidental discharges. No transportation permit will be issued until such a plan has been submitted to and approved by the Department.

5.3.32.3.13 All transporters shall at all times maintain commercial automobile liability insurance with a combined single limit of at least $100,000, and shall submit a Certificate of Insurance demonstrating compliance with this regulation.

5.3.32.3.14 A copy of the Non-Hazardous Liquid Waste Transporters Permit must be kept in each vehicle used to transport non-hazardous liquid waste.

5.3.32.3.15 At all times, and in all phases of operations, Class F licensees and/or Non-Hazardous Liquid Waste Transporters shall comply with all laws and regulations regarding the activities associated with on-site wastewater system maintenance and disposal of materials removed therefrom.

5.3.32.3.16 Other information requested by the Department.

5.3.32.4 Bonding requirements

5.3.32.4.1 A Non-Hazardous Waste Transporter shall execute as a requirement for obtaining and keeping a Non-Hazardous Liquid Transporters Permit under these Regulations, a person shall file with the Department a bond, Letter of Credit or other security in a form approved by the Department.

5.3.32.4.2 The bond shall be payable to the Department and the obligation of the bond shall be conditioned upon the fulfillment of all requirements related to the permit.

5.3.32.4.3 The amount of the bond shall be at least $5,000.

5.3.32.4.4 Liability under the bond shall remain in effect until the expiration date of the permit. The Department shall release the bond after the Department determines that all of the conditions of the permit covered by the bond have been fulfilled.

5.3.32.4.5 The bond shall be executed by the applicant and by a corporate surety licensed to do business in this State. Instead of having a bond executed by a corporate surety, the applicant may elect to deposit, with the Department, cash or negotiable bonds of the federal government or of this State or a Letter of Credit to the Department. The amount of the cash deposit or the market value of any securities shall be at least equal to the required sum of the bond. The Department shall receive and hold the cash or securities in trust, for the purposes for which the deposit is posted.

5.3.32.4.6 The obligation of the applicant and of any corporate surety under the bond shall become due and payable, and all or any part of any cash or securities shall be applied to payment of the costs of properly fulfilling any requirement of the permit if the Department has:

5.3.32.4.6.1 Notified the applicant and any corporate surety that the conditions of the permit have not been fulfilled, and specified in the notice the particular deficiencies in the fulfillment of the permit conditions;

5.3.32.4.6.2 Given the applicant and any corporate surety 60 days to correct the deficiencies and to fulfill all of the conditions of the permit.

5.3.32.4.6.3 Determined that, at the end of 60 days, some or all of the deficiencies specified above remain uncorrected.

5.3.32.5 Transportation requirements for non-hazardous liquid wastes:

5.3.32.5.1 Display the name, address and permit number of the permittee in standard block letters no less than three (3) inches high on both sides of each vehicle used for hauling purposes.

5.3.32.5.2 Equip every vehicle used for hauling purposes with a watertight tank or body.

5.3.32.5.3 Maintain every vehicle used for transporting in a clean and sanitary condition.

5.3.32.5.4 Liquid wastes shall not be transported in an open body vehicle unless contained within suitable receptacles.

5.3.32.5.5 All pumps and hose lines shall be free of leaks.

5.3.32.5.6 Assure all receptacles used for transporting liquid or solid wastes are watertight, equipped with tight fitting lids and are cleaned daily.

5.3.32.5.7 Obtain prior approval in writing from the Department for every site at which a hauler plans to discharge a specified amount of waste material collected.

5.3.32.5.8 No waste material shall be discharged on any site without such prior approval. Written approval will be based upon the applicant having satisfied the requirements of all applicable regulations.

5.3.32.5.9 Waste material collected by the hauler shall not be discharged into ditches, watercourses, lakes, ponds, tidewater or at any point where it can pollute any watercourse, water supply source, bathing area, or shellfish growing area. It shall not be deposited within 300 feet of any highway, except as provided in Section 5.3.32.5.10.

5.3.32.5.10 Discharge liquid wastes into approved wastewater treatment facilities unless otherwise authorized by the Department, provided such facilities have sufficient capacity, capability to handle such liquid wastes and have authorized discharge.

5.3.32.5.11 Fit all truck pumping and discharge hoses with automatic shutoff valves.

5.3.32.6 Transportation of biosolids

5.3.32.6.1 For the purpose of this section, biosolids and septage are divided into three types:

Biosolid Type	Percent Solids
Liquid	< 15%
Cake	15 – 35%
Dried	> 35%

5.3.32.6.2 Liquid biosolids or septage can be pumped and transported by pipeline. If liquid biosolids are transported by truck, rail, or barge, closed watertight vessels shall be used such as tank trucks and railroad tank cars or other vessels which can provide equivalent protection against spills and leakage.

5.3.32.6.3 Cake may be transported in watertight boxes, such as dump trucks properly sealed to prevent leaks, or cement type vehicles. Unless the applicant demonstrates equivalent protection against spills and leakage, when biosolid cake is transported in dump trucks, the following standards shall be met:

5.3.32.6.3.1 The trucks shall be equipped with splash guards firmly attached horizontally at the front and rear of the trailer.

5.3.32.6.3.2 Each splash guard shall cover at least 25% of the trailer's open area.

5.3.32.6.3.3 A minimum two (2) feet of freeboard shall be maintained between the biosolids and the top of the trailer unless the top of the trailer is completely sealed.

5.3.32.6.4 The Department may require certain cake biosolids to be transported as liquid biosolids.

5.3.32.6.5 Dried biosolids may be transported in open boxes, such as dump trucks, which are properly sealed to prevent leakage. The trucks shall be covered with tarps or the equivalent.

5.3.32.7 Transportation of source separated materials as defined in Section 3.0 of the Regulations Governing Solid Waste, for reuse or recycling, does not require a Non-Hazardous Liquid Waste Haulers Permit, only if the material remains separated throughout the transport routes and are not recombined.

5.4 Installation Requirements

5.4.1 Excavation

5.4.1.1 Clearing and Grubbing: All vegetation shall be cut and removed from the grade surface at a distance of 10 feet beyond the perimeter of the disposal area (see Lot Clearing Guidelines). Trees and shrubs shall be cut and removed at grade level while roots may be left in place. All cut materials shall be removed from the disposal area.

5.4.1.2 Special care should be taken when clearing vegetation from an approved disposal area as disturbance of the soil surface may render the site unsuitable.

5.4.1.3 All unsuitable excavation materials shall be discarded and the excavation shall be kept dry and de-watered from surface drainage until backfilling is completed.

5.4.1.4 Excavation machinery shall be of such type and operated in such a manner that they will not compact or smear the trench or bed sidewall soils. If smearing does occur, the smeared surfaces (trench/bed sidewalls and bottoms) shall be hand-raked (scarified) to expose an unsmeared soil interface. Trenchers are required for excavation of LPP trenches. Tracked vehicles are preferred in most installation situations.

5.4.1.5 Excavations below the design depth shall be brought up to proper elevation with approved fill materials installed in accordance with these Regulations and the requirements for sand-lined systems. Additional aggregate may only be used when a minimum of three (3) feet of undisturbed soil can be maintained between the bottom of the aggregate and the limiting zone. In no case shall more than one (1) foot of additional aggregate be used.

5.4.1.6 The sides of the trenches or beds shall be practically plumb and scarified.

5.4.1.7 The bottom of the trench or bed area shall be practically level as determined by using a transit, or laser level, with a maximum grade tolerance of two (2) inches per 100 feet.

5.4.1.8 All trench or bed excavations shall be kept free of water and dry. Tamping of trench sides and bottoms is not permitted.

5.4.2 Materials

5.4.2.1 Sandy fill and filter aggregate materials must come from a supplier whose in-house certification either meets or exceeds gradation requirements as listed in the first two tables below. Random inspection of supply pits and supplier's storage

facilities may be performed by the Department. Tire chip (shreds) specifications are located in the third table below.

5.4.2.2 Sandy fill materials shall be medium sand, sandy loam, loamy sand/sandy loam mixture.

Sandy Fill Gradation Requirements

Sieve Size	Maximum Percentage Passing Sieve
3/8"	100%
#4	95-100%
#50	5-30%
#100	1-7%

Aggregate Sizing Requirements

Sieve Size	Maximum Percentage Retained	Minimum Percentage Passing Sieve
2 ½"	0%	100%
2"	0-3%	97-100%
1 ½"	5-10%	90-95%
1"	50-80%	20-50%
½"	25-35%	10-25%
#4	0-5%	0-5%
#8	0%	0%

Tire Chip Sizing Requirements

Sieve Size	Percentage Passing Sieve
4"	100% minimum
2"	25% minimum
#4	5% maximum

NOTE: The tire shreds shall have less than one (1)% (by weight) of metal fragments that are not at least partially encased in rubber. Metal fragments shall protrude no more than one (1) inch on 100% of the pieces and no more than one half (½) inch on 75% of the pieces (by weight). In no case shall the tire shreds contain the remains of tires that have been subjected to a fire.

NOTE: The Class E system contractor shall submit upon request a Certification of Materials for fill, aggregate and/or tire chips used in systems. This certificate shall be obtained from the supplier.

5.4.2.3 Grade boards or blocks may be used in pipe installation to assure a proper slope of less than two (2) inches per 100 feet for gravity distribution lines.

5.4.2.4 Filter fabric shall be placed over the gravel with a two (2) inch overlap turned up on each side of the trench or bed.

5.4.2.5 Aggregate-free chambers or any other similar devices may be used in the design, installation, and operation of on-site wastewater treatment and disposal systems in Delaware, but are subject to approval of the Department. The minimum disposal area required when using aggregate-free chambers shall be calculated by utilizing the most recent guidelines and Sections 5.3.2.2 and 5.3.2.3.

5.4.3 Septic Tank Installation

5.4.3.1 Excavation: The excavation shall be large enough to allow safe, unencumbered working conditions but in no case shall the size of the excavation be less than two (2) feet beyond the perimeter of the tank. Excavations shall be kept dewatered from surface drainage until backfilling is complete.

5.4.3.2 Foundations: The tank shall be placed on firm, dry, granular, undisturbed soil that has been graded level. Gravel bedding shall be used on damp or fine grained soils. A gravel bed foundation shall consist of stone which meets the specifications in Section 5.4.2 and shall be placed level to a minimum thickness of six (6) inches in the excavation. The gravel bed shall extend one (1) foot beyond the perimeter of the tank.

5.4.3.3 All tanks shall be placed on a level grade and at a depth that provides adequate gravity flow from the source. Where adequate flow from the source is maintained through the use of pumping equipment, the impact of pumping rates and potential surge flows shall be evaluated so as to maintain the treatment efficiency of the septic tank unit.

5.4.3.4 Previously excavated material from the tank excavation may be used for backfill provided the excavation material is dry and free of stones larger than four (4) inches in diameter, construction debris, concrete, wood and other similar materials. To equalize external pressure against the septic tank, backfill material shall be placed and compacted, extending a minimum of two (2) feet beyond the perimeter of the tank.

5.4.3.5 Backfill materials shall be placed in uniform layers not more than eight (8) inches thick and compacted to no less than 85% Modified Proctor Density. Tamping shall be done in a manner that will not produce undue stress or strain on the tank. All backfill shall be free of excessive moisture.

5.4.3.6 Testing: All tanks shall be tested to ensure watertight conditions and to check alignment and operation of inlet, inter-compartment and outlet connections prior to backfill. When tested, tanks shall be filled to overflowing with water to observe operation of all connections and fittings. All visible leaks in the tank observed by the installer shall be repaired prior to backfilling.

5.4.4 Distribution Networks

5.4.4.1 All systems requiring a total of ≥ 2,500 square feet of disposal area shall have a pressurized distribution system pursuant to these Regulations.

5.4.4.2 All systems requiring ≥ 2,500 square feet of disposal area, with the exception of low pressure pipe systems, shall be divided into a minimum of two separate alternating systems of equal size with pressurized distribution. The

minimum separation between absorption facilities shall be 10 feet, with the exception of subsurface irrigation systems.

5.4.4.3 All systems installed on lots where percolation rates are < six (6) mpi shall have pressure distribution systems.

5.4.4.4 A minimum distance of four (4) feet and a maximum distance of six (6) feet shall separate adjacent laterals in a bed. Laterals shall be placed no farther than three (3) feet from the sidewalls of the bed. The length to width ratio for seepage beds and elevated sand mounds shall be 4:1 or greater and maximum bed width shall not exceed 25 feet, unless approved by the Department. A minimum distance of six (6) feet shall separate laterals in a trench disposal system.

5.4.4.5 Gravity system distribution laterals may be connected in closed loop systems on slopes ≤ two (2)%.

5.4.4.6 The maximum allowable trench or bed length is 100 feet for gravity distribution systems and pressure distribution systems.

5.4.4.7 Each trench or bed system shall contain at least two distribution laterals. Trenches shall be utilized in all distribution systems located on slopes in excess of two (2)%, unless otherwise approved by the Department.

5.4.4.8 All distribution systems shall ensure equal distribution when designed on slopes.

5.4.5 Conventional Treatment and Disposal Systems

5.4.5.1 Gravity Trenches and Beds (see Exhibits K, L, M and N)

5.4.5.1.1 A minimum of 12 inches of filter aggregate or gravel-less chambers shall be placed in the bed or trench. When aggregate is utilized a minimum of six (6) inches of aggregate shall be placed under the distribution laterals. The remaining filter aggregate shall be placed so that a minimum depth of no less than two (2) inches exists above the crown of the distribution pipe.

5.4.5.1.2 For trenches or beds with a minimum sidewall depth of 24 inches, backfill shall be placed in accordance with permit requirements. Unless otherwise required by the Department, the construction sequence shall be as follows:

5.4.5.1.2.1 The backfill material shall be at least 12 inches in depth above the filter fabric and returned to the original grade.

5.4.5.1.2.2 Backfill material shall be carefully deposited by methods which will not damage or disturb the distribution pipe or result in undue compaction of the backfill.

5.4.5.1.2.3 Backfill over trenches or beds shall not be tamped.

5.4.5.1.2.4 Material containing an excess of moisture shall be permitted to dry until the moisture content is within workable limits. The moisture content of the material being placed shall be within plus or minus three (3)% of optimum as determined by AASHTO Designation T-99.

5.4.5.1.2.5 Backfill material which is too dry for proper placement shall be wetted. All materials shall be free of stones larger than two (2) inches in diameter, debris, trash, wood or other similar materials.

5.4.5.1.3 For trenches or beds with a minimum sidewall depth of 12 inches but less than 24 inches, a capping fill shall be placed over the disposal system. The cap shall be constructed pursuant to permit requirements (see Exhibits M and

N). Unless otherwise required by the Department, the construction sequence shall be as follows:

5.4.5.1.3.1 The texture of the soil used for the cap shall be of the same textural class or of one textural class finer, as the natural topsoil. All materials shall be free of stones, larger than two (2) inches in diameter, debris, trash, wood or other similar materials.

5.4.5.1.3.2 Construction of capping fills shall not occur when the natural soil has a moisture content which causes loss of soil structure and porosity when worked.

5.4.5.1.3.3 The disposal area shall be scarified to destroy the vegetative mat.

5.4.5.1.3.4 The system shall be installed as specified in the construction permit. There shall be a minimum of 10 feet of separation between the edge of the fill and the absorption facility.

5.4.5.1.3.5 Suitable backfill shall be applied to the fill site and worked in so that the two (2) contact layers (native soil and fill) are mixed. Fill material shall be evenly graded to a minimum final depth of 16 inches over the aggregate or gravel-less chambers and properly crowned.

5.4.5.1.3.6 The site shall be landscaped according to permit conditions and be protected from livestock, automotive traffic or other activity that could damage the system.

5.4.5.2 Elevated Sand Mounds (see Exhibit Q)

5.4.5.2.1 Sand mound absorption areas shall be plowed seven (7) to eight (8) inches deep parallel to the contour after removing the vegetative mat. Plowing shall not be done on wet soils. No plowing instruments which compact the soil shall be used. Moldboard or chisel plows are recommended.

5.4.5.2.2 Immediately after plowing, sandy fill shall be placed on the up-slope edges of the plowed mound absorption area and spread to a depth as specified in the permit. Only lightweight equipment such as small track type tractors shall be allowed.

5.4.5.2.3 A 12 inch bed of aggregate or gravel-less chambers shall be placed over the sandy fill. When utilizing aggregate, a minimum of six (6) inches shall be placed under the distribution lateral with the remaining aggregate placed to an additional depth of six (6) inches with at least two (2) inches over the crown of the distribution pipe.

5.4.5.2.4 A minimum allowable distance of four (4) feet and a maximum distance of six (6) feet shall separate adjacent laterals in an elevated sand mound bed.

5.4.5.2.5 The slope of the sandy fill not directly beneath the filter aggregate or gravel-less chambers shall be a minimum of 3:1, with 5:1 recommended by the Department.

5.4.5.2.6 Mound covering or berm soil shall be loamy sand or sandy loam.

5.4.5.2.7 The mound berm shall extend at least 12 inches above the 12 inch filter aggregate layer plus at least six (6) inches of topsoil cover.

5.4.5.2.8 The outside slopes of the mound cover or berm shall be a minimum of 3:1 with 5:1 recommended by the Department.

5.4.5.2.9 Erosion control shall be provided over the complete mound in one of the following manners:

5.4.5.2.9.1 Grass shall be planted over the entire mound and stabilized with mulch; or

5.4.5.2.9.2 Sod entire mound; or

5.4.5.2.9.3 Other pre-authorized methods of erosion control

5.4.5.3 Low Pressure Pipe Systems (see Exhibits O & P)

5.4.5.3.1 A trench width of 12 inches shall be used.

5.4.5.3.2 Trenches shall be no less than five (5) feet on center.

5.4.5.3.3 Nine (9) inches of filter aggregate or gravel-less chambers shall be placed in the trench. When aggregate is utilized, there shall be six (6) inches below the pipe and the remaining three (3) inches of aggregate placed around and above the pipe. There shall be a minimum of nine (9) inches of soil cover over aggregate or gravel-less chambers.

5.4.5.3.4 Filter fabric shall be placed on top of the aggregate in the trench with a two (2) inch overlap turned up on each side of the trench.

5.4.5.3.5 Check valves are required to eliminate the back siphoning of effluent from the laterals.

5.4.5.3.6 Turn ups shall be finished below grade and protected by a four (4) inch diameter or greater Sch. 40 PVC sleeve with a cap and ferrule finished at grade.

5.4.5.3.7 Timers or other electrical on/off delay devices shall be installed to ensure dosing frequencies and volumes.

5.4.5.4 Wisconsin At-Grade Systems (see Exhibits U & V)

5.4.5.4.1 Wisconsin At-Grade (WAG) absorption areas shall be plowed seven (7) to eight (8) inches deep parallel to the contour after removing the vegetative mat. Plowing shall not be done on wet soils. No plowing instruments which compact the soil shall be used. Moldboard or chisel plows are recommended.

5.4.5.4.2 Immediately after plowing, a 12 inch bed of filter aggregate shall be placed over the plowed area. Six (6) inches of aggregate shall be placed under the distribution lateral with the remaining aggregate placed to an additional depth of six (6) inches with at least two (2) inches over the crown of the distribution pipe. Only lightweight equipment such as small track type tractors shall be allowed when placing the aggregate.

5.4.5.4.3 Filter fabric shall be placed over the aggregate bed prior to backfilling.

5.4.5.4.4 WAG covering or berm soil shall be loamy sand or sandy loam.

5.4.5.4.5 The WAG covering or berm shall extend at least 12 inches above the 12 inch filter aggregate layer with six (6) inches of topsoil cover.

5.4.5.4.6 The outside slopes of the WAG cover or berm shall be approximately 5:1.

5.4.5.4.7 Erosion control shall be provided over the complete WAG in one of the following manners:

5.4.5.4.7.1 Grass shall be planted over the entire WAG and stabilized with mulch; or

5.4.5.4.7.2 Sod entire WAG; or

5.4.5.4.7.3 Other pre-authorized methods of erosion control

5.4.5.5 Site Restoration

5.4.5.5.1 The finished grade of the backfill over seepage bed, trench and sand-lined absorption facilities shall be crowned/sloped to provide positive drainage.

5.4.5.5.2 The land adjacent to all absorption facilities shall be graded to prevent both the accumulation of surface water on the absorption facility and the flow of surface water across the absorption facility. The finished absorption facility and fill extensions shall be seeded and mulched or sodded to prevent erosion.

5.4.5.5.3 Trees shall not be planted within 10 feet of the perimeter of absorption facility. All post-construction planted trees and shrubs shall be located to prevent root intrusion into the absorption facility and other components of the system. Shallow rooted shrubs are permitted (e.g., rhododendrons, azaleas).

5.4.5.5.4 All areas of disturbance due to the installation of the absorption facility shall be either sodded or seeded and mulched to establish a permanent grass cover.

5.4.6 Inspections

5.4.6.1 Construction

5.4.6.1.1 The Class E system contractor shall contact the Department 24 hours prior to system construction to obtain a startup number to authorize the construction.

5.4.6.1.2 Changes to a permit which result in only a relocation of the system can be done by submitting a pre-inspection “as-built”, which requires a minimal check against the site evaluation to ensure the system is still located within approved soils and that all required isolation distances are met. These “as-builts” are to be submitted to the Department by the Class E system contractor prior to installation. The Class E system contractor must obtain permission from the designer prior to submittal.

5.4.6.1.3 When construction or repair of a system is complete, except for backfill (cover), or as required by permit, the Class E system contractor shall notify the Department or Class I system inspector, when applicable. The inspector shall inspect the installation to determine if it complies with these Regulations and the terms and conditions of the permit, unless the inspection is waived by the Department in accordance with Section 5.4.6.1.6

5.4.6.1.4 It is the responsibility of the Class E system contractor to confirm the results of the pre-cover inspection prior to backfilling the system.

5.4.6.1.5 An inspector shall be either:

5.4.6.1.5.1 An employee of the Department.

5.4.6.1.5.2 A Class C designer or his/her designee. The Class C designer must submit a list of authorized personnel, on company letterhead, to the Department for review and approval.

5.4.6.1.5.3 Any person officially authorized by the Department to perform inspections of on-site wastewater treatment and disposal systems.

5.4.6.1.6 The Department may waive the pre-cover inspection, provided:

5.4.6.1.6.1 The installation is an on-site wastewater treatment and disposal system installed by a licensed person pursuant to these Regulations; and

5.4.6.1.6.2 After system completion the Class E system contractor shall provide a construction report which certifies in writing that the system complies with the Department's Regulations within 10 calendar days of system completion. If any changes were made to the system the Class E system

contractor shall also provide a detailed "as-built" plan (drawn to scale) within 10 calendar days of system completion.

5.4.6.1.7 Failure to comply with Departmental Regulations and the conditions of the permit will result in verbal notification to the Class E system contractor. Failure to correct deficiencies within 10 calendar days (weather permitting) may result in written notification of such to both the Class E system contractor and permittee. Additional inspections may be required by the Department.

5.4.6.1.8 Once a system has received a satisfactory pre-cover inspection or authorization to cover without a Departmental inspection, the system may be covered as specified in the approved permit. Backfilling must be completed within 10 calendar days of a satisfactory pre-cover inspection or authorization to cover by the Department, weather permitting.

5.4.6.1.9 Systems requiring earthen caps and all mound systems shall require a final cover inspection pursuant to Section 5.4.6.1.3 or 5.4.6.1.6. Capping of systems must be completed within 10 calendar days of a satisfactory pre-cover inspection or authorization to cover without Departmental inspection, weather permitting.

5.4.6.1.10 Inspections performed by Class C designers shall conform to guidelines established by the Department.

5.4.6.1.11 In situations where the Class C designer is not comfortable approving a system, he/she is to contact the Department immediately.

5.4.6.2 Inspection Protocols

5.4.6.2.1 The Class E system contractor shall be responsible for site inspection readiness which implies system completion and requires that:

5.4.6.2.1.1 All septic and dosing tanks and lift stations be set and left uncovered with all appropriate risers, filters and other appurtenances installed as required by permit design. In addition, appropriate levels of water (if applicable) for lift stations and dosing tanks shall also be provided to facilitate testing.

5.4.6.2.1.2 All accessory components be set and left uncovered with appropriate risers and other appurtenances installed as required by permit design.

5.4.6.2.1.3 All transmission trenches from septic, lift station, or dosing tanks shall be left uncovered to verify transmission pipe diameter, level and/or bury depth. Exceptions shall be considered where high water tables are encountered. Portions of the trenches may be backfilled to facilitate site access as required. All inlet/outlet connections to all tanks and components shall be left uncovered in order to ensure pipe connection quality/integrity.

5.4.6.2.1.4 The entire absorption facility (e.g. drainfield) must be left uncovered for inspection to verify trench/bed length, width and depth, sidewall condition and aggregate quality. Exceptions to this requirement may be considered for absorption facilities where site conditions such as limited site or drainfield area access, trench spacing that precludes stable equipment stabilizer placement, steep slopes, etc. are encountered. In such cases, some trenched drainfields may be backfilled to better facilitate system installation. In these instances, at the discretion of the Class E system contractor, all trenches except one may be backfilled with the exception

being the most upslope trench. All pre-inspection backfilled trenches must, at a minimum, have at least two areas along the length of the trench (not including the trench beginning/end) uncovered for depth verification. In all inspection scenarios regardless of degree of pre-inspection cover, the beginning and ends of all absorption trenches must be left uncovered to verify trench length.

5.4.6.2.1.5 All electrical components must be completely installed, wired and ready for testing and/or operation. This is to include, but not limited to, all timers, control panels, alarms, pumps, floats w/attending controls and other accessory appurtenances required by permit design. In cases where generators are utilized to provide electricity for testing where on-site power is not yet available all wiring should be complete with the exception of the final wiring tying into the available breaker box. All electrical connections and components utilized in an OWTDS, at a minimum, must comply with National and Delaware Electric Code (**Admin Code**, Title 24, §1400).

5.4.6.3 Class H

5.4.6.3.1 For all properties utilizing an OWTDS that are sold or otherwise transferred to other ownership, the persons must have the system pumped out and inspected by a Class F and Class H licensee, respectively, prior to the completion of sale. An extension will be given to sheriff sales, short sales, cash sales and auctions for a period not to exceed 90 days from date of sale. All inspections of on-site wastewater treatment and disposal systems shall be submitted to the Department on forms approved by the Department (see Exhibit A). These forms shall be submitted within 72 hours of inspection completion.

5.4.6.3.2 Must be performed by a Class H system inspector.

NOTE: If an inspection has occurred within the previous 36 months and the property owner can provide documentation of such pump out and inspection, then such documentation will fulfill the requirements of 5.4.6.3.

5.4.6.3.3 For transfers of new property, the certificate of completion will fulfill the requirements of this section if issued within the previous 24 months.

5.4.6.3.4 If the owner of an individual OWTDS provides proof of a licensed operator or has an annual service contract with a certified service provider then such documentation will fulfill the requirements of 5.4.6.3.

5.4.6.3.5 Research historic records with DNREC (permits and/or site evaluations) through tax map numbers and previous owners. Submission of current zoning certificate required.

5.4.6.3.6 All reports are required to be submitted on forms provided by the Department and are not to be altered without the prior approval of the Department (see Exhibit A).

5.4.6.3.7 Interview the homeowner and/or tenants when completing the inspection forms, if available.

5.4.6.3.8 Perform a **visual** inspection under the house for greywater lines or separate systems.

NOTE: Report if area under the dwelling is not accessible.

5.4.6.3.9 Flow test from each household fixture, if applicable.

NOTE: Report if access to dwelling is not available.

DISCLAIMER: The International Plumbing Code shall apply to the erection,

installation, alteration, repairs, relocation, replacement, addition to, use or maintenance of plumbing systems (e.g. building drains) however this does not preclude others from **visually** inspecting the building drain for separate systems leaving the building.

5.4.6.3.10 Tank and Building Sewer Inspection

5.4.6.3.10.1 Locate tank.

5.4.6.3.10.2 Excavate both inlet and outlet lids on septic tank, if not equipped with risers.

5.4.6.3.10.3 Check flow through building sewer from house to inlet baffle, if possible.

5.4.6.3.10.4 Observe and make note of effluent levels in septic tank.

5.4.6.3.10.5 Observe and make note of effluent filter, if present.

5.4.6.3.10.6 Measure and report sludge and scum thickness to determine the volume of solids in the tank.

5.4.6.3.10.6.1 The combined total should not exceed 30% of tank volume.

5.4.6.3.10.7 Proceed with tank pump-out. This is required for all inspections and pump-out documentation may be required also.

5.4.6.3.10.7.1 Pay attention to pump-out, note abnormal items.

5.4.6.3.10.8 Inspect the structural integrity of the tank.

5.4.6.3.10.9 Inspect inlet and outlet pipes.

5.4.6.3.10.10 Inspect all baffles.

5.4.6.3.10.11 Observe flow back from drainfield, if any.

5.4.6.3.11 Distribution Box Inspection, if applicable, if not go to 5.4.6.3.12.

5.4.6.3.11.1 Dig up and inspect structural integrity of distribution box.

5.4.6.3.11.2 Inspect grouting and/or gaskets around both the inlet and outlets pipes.

5.4.6.3.11.3 Observe water level in distribution box.

5.4.6.3.11.4 Observe that all outlet inverts are set level.

NOTE: In a properly functioning system, the water level should not be above the invert of the outlet pipe. If the water level is above the invert of the outlet pipes, this can be an indicator that ponding may be occurring in the drainfield. Special attention should be given to the **NOTE:** in 5.4.6.3.13.3 as this condition in the distribution box along with probing throughout the drainfield may eliminate the need for additional excavation.

5.4.6.3.11.5 If pump truck is still on-site, evacuate distribution box observing any backflow from drainfield.

5.4.6.3.11.6 Check distribution box for cracks and inflow of sediment or carryover of FOG/Sludge.

DISCLAIMER: All Occupational Safety and Health Act (OSHA) regulations must be complied with during all phases of system installation and inspection. OSHA regulations can be found at www.osha.gov or by contacting the U.S. Department of Labor.

5.4.6.3.12 Dosing Chamber Inspection, if applicable, if not go to 5.4.6.3.13.

5.4.6.3.12.1 Inspect the structural integrity of the dosing chamber, riser and lid.

5.4.6.3.12.2 Inspect grouting and/or gaskets around pipe openings, tank seams and risers.

5.4.6.3.12.3 Make a **visual** inspection of the electrical components for safe and corrosion free appearance.

5.4.6.3.12.4 Check float switches for proper operation of the pump and alarm

5.4.6.3.12.5 Check for timer location, if applicable.

5.4.6.3.12.6 Ensure that flow is leaving the dosing chamber by taking effluent measurements before and after activating the pump.

5.4.6.3.12.7 Check for weep hole, if applicable, to ensure open and below check valve.

DISCLAIMER: All electrical work must meet all currently adopted State and National Electrical Codes where applicable (**Admin Code**, Title 24, §1400).

5.4.6.3.13 Gravity Drainfield Inspection (Full Depth and/or Capping Fill), if applicable, if not go to 5.4.6.3.14.

5.4.6.3.13.1 Perform visual inspection of the drainfield area.

NOTE: Look for wet or depressed areas with lush vegetation.

5.4.6.3.13.2 Using system records and permits, if available, locate the drain field.

5.4.6.3.13.3 In all cases, the existing drainfield should be probed to find its size and extent as well as its exact location.

NOTE: While probing the drainfield, care should be taken to observe the apparent operating condition of the drainfield. If, in the opinion of the inspector, there appears to be ponding in the drainfield, additional excavation, to determine the extent of the ponding and the systems functionality, may be necessary.

5.4.6.3.13.4 In the event that the dwelling/building connected to the system that is being inspected has been vacant for more than seven days, it is recommended that a flow/slug test, as described by NAWT or PSMA, be performed on the drainfield.

5.4.6.3.14 Pressure Dosed Inspection (Full Depth and/or Capping Fill), if applicable, if not go to 5.4.6.3.15.

5.4.6.3.14.1 Perform the initial inspection in the same manner as 5.4.6.3.13 above “Gravity Drainfield Inspection”.

5.4.6.3.15 Elevated Sand Mound Inspection, if applicable, if not go to 5.4.6.3.16.

5.4.6.3.15.1 Perform the initial inspection in the same manner as 5.4.6.3.13 above “Gravity Drainfield Inspection”.

5.4.6.3.15.2 Ensure the satisfactory condition of grass cover for stabilization

5.4.6.3.16 Low Pressure Pipe System Inspection (Full Depth and/or Capping Fill), if applicable, if not go to 5.4.6.3.17.

5.4.6.3.16.1 Perform the initial inspection in the same manner as 5.4.6.3.13 above “Gravity Drainfield Inspection”.

5.4.6.3.16.2 Perform a visual inspection of the drainfield.

NOTE: Look for wet, depressed areas with lush vegetation.

5.4.6.3.17 Wisconsin At-Grade System Inspection, if applicable, if not go to 5.4.6.3.18.

5.4.6.3.17.1 Perform the initial inspection in the same manner as 5.4.6.3.13 above “Gravity Drainfield Inspection”.

5.4.6.3.17.2 Perform a visual inspection of the drainfield.

NOTE: Look for wet, depressed areas with lush vegetation.

5.4.6.3.18 All Innovative/Alternative systems including advanced treatment unit's (ATU's) and alternative drainfield systems may only be inspected by a Class H licensee that has been certified through DNREC approved training for that ATU or alternative drainfield system. Proof of certification must be submitted to DNREC. A Class H license alone is not adequate enough for this task.

5.4.6.3.19 Scale drawing must contain, at a minimum:

5.4.6.3.19.1 A site drawing to scale, straight edge must be used (no free-hand lines), must show a reference point such as numbered utility pole, telephone or electrical box, building(s), property corners or fixed survey markers, or GPS coordinates. A minimum of two (2) such reference points should be noted on the site sketch. Site sketches shall be based on a whole number scale not to exceed one (1) inch equals 100 feet. Acceptable scales are: 1 inch = 10, 20, 30, 40, 50, 60, or 100 feet.

5.4.6.3.19.2 A north directional arrow.

5.4.6.3.19.3 Indicate location of central water line or on-site well. All on-site wells must be measured from two (2) reference points or established survey control.

5.4.6.3.19.4 Identify each wastewater treatment and disposal system component.

5.4.6.3.19.5 Mark distances from fixed reference points (e.g. property corners, existing dwelling) or established survey control points for each wastewater treatment and disposal system component.

5.4.6.3.19.6 Should an existing approved permit drawing be available the drawing maybe used, but the inspector must either note on the drawing that "no changes were found" or clearly mark all the changes on the permit drawing.

5.4.6.3.20 All cesspools and seepage pits are prohibited and when found must be replaced within one (1) year in accordance with these Regulations.

5.4.6.3.21 All metal tanks and metal distribution boxes are prohibited and when found must be replaced in accordance with these Regulations.

5.4.6.3.22 Once received, the Class H Inspection Report shall be reviewed for compliance with current Regulations. If not in compliance, the Class H inspector will be notified. The Class H inspector must submit the required corrections within 72 hours of notification to the Department and the owner.

5.4.6.3.23 If repairs are made to the system, after receiving an unsatisfactory rating during a Class H inspection, another Class H inspection must be performed or paperwork submitted to the Department outlining all work completed to return system to a satisfactory condition.

5.4.7 Certificate of Satisfactory Completion

5.4.7.1 The Department shall issue a Certificate of Satisfactory Completion, if, upon inspection of the installation, the system complies with the Department's Regulations, the conditions of the permit, and a Construction Report is submitted to the Department.

5.4.7.2 A system shall be backfilled (covered) when:

5.4.7.2.1 The Class E system contractor is notified by the Department that inspection has been waived; or

5.4.7.2.2 The inspection has been done and authorization has been granted to cover the system.

5.4.7.3 Corrections necessary to meet requirements for satisfactory completion shall be made within 10 calendar days after written notification by the Department, unless otherwise required and weather permitting.

5.4.7.4 A Certificate of Satisfactory Completion shall be valid for a period of two (2) years from the date of issuance. After the two (2) year period, the Regulations for Authorization to Use an Existing System Permit shall apply (see Section 5.3.28).

5.4.7.5 Denial of a Certificate of Satisfactory Completion may be appealed in accordance with 7 **Del.C.** §6008.

5.4.7.6 If the system has been placed into operation without the required Certificate of Satisfactory Completion, a Notice of Non-Compliance shall be issued to the owner and must be corrected within 10 calendar days or system must be abandoned in accordance with Section 5.4.8.3.

5.4.8 Abandonment of On-Site Wastewater Treatment and Disposal Systems

5.4.8.1 General Requirements

5.4.8.1.1 All systems shall be abandoned by a Class E system contractor or other governmental appointee.

5.3.8.1.2 Within 10 calendar days of abandonment, the Class E system contractor or governmental appointee shall submit a System Abandonment Report on a form provided by the Department (see Exhibit AA). The report shall be filled out completely and signed by the system contractor or governmental appointee.

5.4.8.2 The system shall be properly abandoned when:

5.4.8.2.1 A central wastewater system becomes available and the building sewer has been connected thereto; or

5.4.8.2.2 The source of wastewater has been permanently eliminated.

5.4.8.3 Procedures for Abandonment:

5.4.8.3.1 The septic tank, cesspool or other treatment unit shall be pumped by a Class F liquid waste hauler to remove all of the contents.

5.4.8.3.2 The septic tank, cesspool or other treatment unit shall be removed or filled with sand, bank run gravel, or other material approved by the Department.

NOTE: If metal tank is encountered, it must be removed and properly disposed of.

5.4.8.3.3 The system's building sewer shall be permanently capped.

5.4.8.3.4 The System Abandonment Report shall be submitted to the Department within 10 calendar days.

5.4.8.3.5 In addition, the requirements of Section 5.4.5.5 must be adhered to to properly restore the site after system abandonment.

5.5 Operation and Maintenance

5.5.1 The owner shall be responsible for operating and maintaining their on-site wastewater treatment and disposal systems.

5.5.2 Each on-site wastewater treatment and disposal system shall be pumped by a licensed Class F liquid waste hauler once every three (3) years and innovative/alternative treatment systems shall be pumped according to manufacturer recommendations unless determined that the tank is less than one-third ($^1/_3$) full of solids. The schedule shall be prescribed in accordance with current Department guidelines based on the size of the treatment unit and anticipated number of residents. The owner of the on-site wastewater treatment and disposal system shall maintain a

record indicating the system has been pumped and provide such documentation to the Department upon request.

5.5.2.1 Effluent filters shall be cleaned as per manufacturer's recommendations, at a minimum, or as necessary to prevent backing up into the dwelling. Cleaning is accomplished by hosing off the filter over the open inlet cover riser.

5.5.3 Grease traps shall be cleaned when 75% of the grease retention capacity has been reached.

5.5.4 The sites of the initial and replacement absorption facilities shall not be covered by asphalt or concrete or subject to vehicular traffic or other activity which would adversely affect the soils. These sites shall be maintained so that they are free from encroachments by accessory buildings and additions to the main building.

5.5.4.1 There shall be no lawn irrigating systems installed over the absorption facility when the absorption facility is active.

5.5.5 The Department may impose specific operation and maintenance requirements for on-site wastewater treatment and disposal systems to assure continuity of performance. All innovative/alternative systems have operation and maintenance requirements. These requirements follow;

5.5.5.1 For new construction, prior to the Department granting a Certificate of Completion, the permittee, unless certified by the homeowner training program, must enter into a service contract with a certified service provider initially, for a minimum of two (2) years starting at the onset of initial system operation. For replacement systems, this service contract must be submitted with the permit application. Specifically, the service contract shall prescribe an Inspection Program and Homeowner Training Program as outlined below:

5.5.5.1.1 Inspection Program

The inspection program shall include the following: a schedule indicating inspection frequency, inspection objective(s), inspection details, necessary operation and maintenance activities, additional sampling if required, and record keeping requirements.

5.5.5.1.1.1 <u>Inspection Frequency/Objective:</u> The service contract must outline that the certified service provider is to inspect the system once every six (6) months or otherwise as approved by the Department.

5.5.5.1.1.2 <u>Inspection Reports:</u> The contract must outline that the certified service provider must document all inspections. Operation inspection reports shall indicate the following: date and time of the inspection, sampling and laboratory analysis results, operation and maintenance performed, repairs, an assessment indicating the current performance status of the entire treatment and disposal system, and any corrective actions that must be taken prior to the next inspection. All inspection reports shall be on forms approved by the Department.

5.5.5.1.2 Homeowner Training Program

The service contract must state that the certified service provider is required to meet with the homeowner during the first sixth month inspection. The certified service provider is to educate the homeowner on the components of the system and on the proper operation and maintenance requirements. At this time, the certified service provider shall provide the homeowner with an operation and maintenance manual.

5.5.5.2 Following the initial two (2) year period, the permittee is required to maintain a service contract for the system by: renewing the existing contract annually, at a minimum, contracting with another certified service provider or being certified by the homeowner training program. The service contract must contain the inspection program requirements from Section 5.5.5.1.1.

5.5.5.3 All reports and contract renewals from the previous year shall be submitted by February 1st of each year to the Department. The certified service provider must submit all inspection reports to the Department and permittee. The permittee shall submit any contract renewals as necessary to the Department.

5.5.5.4 The Department reserves the right to collect and analyze samples to ensure proper treatment levels and system performance.

5.5.5.5 The Department may increase inspection frequencies as warranted. A notice outlining new frequencies and cause will be provided to the permittee prior to initiation.

5.5.5.6 Transferability

Within 90 days after the transfer of the real property which utilizes an innovative/alternative system, the owner shall notify the Department. Transfer of the maintenance agreement must also be completed within this 90 day period.

5.5.6 Innovative/Alternative systems without permit conditions requiring a certified service provider shall be inspected by the Department or its designee once every three (3) years and a fee may be required.

5.6 Waivers

Waivers from any provisions contained in these Regulations may be granted after a public notice and hearing, if warranted.

5.6.1 Applications for Waivers

5.6.1.1 A separate application shall be made to the Department for each site considered for a waiver.

5.6.2 Formal

5.6.2.1 A letter signed and submitted by the property owner or their authorized agent requesting a Formal Waiver (FW). This submittal must include all appropriate fees.

5.6.2.2 A site evaluation report conducted by a Class D soil scientist.

5.6.2.3 At the sole discretion of the Department, a design prepared by a licensed Class C designer may be required to show exact location of a proposed system with initial submission of the FW application.

5.6.2.4 A list of all property owners' names and addresses located contiguous to the waiver site.

4.6.2.5 The location of all current wells within 150 feet of the property.

4.6.2.6 The Department shall advertise a FW in accordance with 7 **Del.C.** §6004 to include direct notification of adjacent property owners. The Department will not hold a public hearing unless a meritorious request is made.

5.6.2.7 Upon approval of the FW the following will be required:

5.6.2.7.1 A completed permit application prepared by a licensed Class C designer, if not previously submitted.

5.6.2.7.2 Only those items stated in writing in the initial request will be granted in the FW.

5.6.3 Rural Area

5.6.3.1 Waivers for any provision of these Regulations may be granted by the Secretary provided that:

5.6.3.1.1 The owner executes and records in the appropriate County Office of the Recorder of Deeds an affidavit, on a form approved by the Department, which notifies prospective purchasers that the property is subject to a Rural Area Waiver (RAW).

5.6.3.1.2 The parcel size is not less than 10 acres.

5.6.3.1.3 The permit is for an on-site wastewater treatment and disposal system designed to serve a single family dwelling.

5.6.3.1.4 The on-site wastewater treatment and disposal system will function in a satisfactory manner so as not to create a public health hazard.

5.6.3.1.5 Each RAW application shall include:

5.6.3.1.5.1 A letter signed and submitted by the property owner or their authorized agent requesting a RAW. This submittal must include all appropriate fees.

5.6.3.1.5.2 A site evaluation report conducted by a Class D.2 or D.3 soil scientist to include the requirements of Section 5.6.3.1.

5.6.3.1.5.3 At the sole discretion of the Department, a design prepared by a licensed Class C designer may be required to show exact location of a proposed system with initial submission of the RAW application.

5.6.3.1.5.4 Proof the parcel is a minimum of 10 acres (survey or statement from zoning office).

5.6.3.1.5.5 Location of any wetlands, refer to Statewide Wetlands Mapping Project (SWMP) map, and State Tidal Wetlands maps, if applicable.

5.6.3.1.5.6 A proposed disposal location which is a minimum of 100 feet from all property boundaries (when soil conditions allow).

5.6.3.1.5.7 The location of all wells within 150 feet of the property boundaries.

5.6.3.1.5.8 A list of all property owners' names and addresses located contiguous to the site.

5.6.3.1.5.9 The Department shall advertise the RAW application in accordance with 7 **Del.C.** §6004 to include direct notification of adjacent property owners. The Department will not hold a public hearing unless a meritorious request is made.

5.6.3.1.5.10 Prior to submitting the site evaluation, the Class D soil scientist in conjunction with the Department will determine the system type, design specifications and return this information to the owner, or designated agent.

5.6.3.1.6 Upon approval of the RAW, the following criteria will be required:

5.6.3.1.6.1 A completed permit application prepared by a licensed Class C designer, if not previously submitted.

5.6.3.1.6.2 An affidavit of a RAW (as part of the permit application).

5.6.3.1.6.3 Only those items stated in writing in the initial request will be granted in the RAW.

5.6.4 Hardship

5.6.4.1 The Secretary may grant waivers from any provision of these Regulations in cases of extreme and unusual hardship.

5.6.4.2 The Department may consider the following factors in reviewing an application for a waiver based on hardship including, but not limited to:

5.6.4.2.1 Advanced age or bad health of the applicant.

5.6.4.2.2 Need of applicant to care for aged, incapacitated, or disabled relatives.

5.6.4.2.3 Relative insignificance of the environmental impact of granting a waiver.

5.6.4.3 Hardship waivers granted by the Secretary may contain conditions such as:

5.6.4.3.1 Permits for the life of the applicant.

5.6.4.3.2 Limiting the number of permanent residents using the system.

5.6.4.3.3 Use of conventional on-site wastewater treatment and disposal systems for specified periods of time.

5.6.4.3.4 Any other conditions which the Secretary finds in his/her sole discretion to be appropriate.

5.6.4.4 At the time of the application, the applicant must designate on the application that it is for a hardship waiver.

5.6.4.5 Documentation of hardship must be provided before the application is referred to the Department for action.

5.6.4.6 Department personnel shall strive to aid and accommodate the needs of applicants for waivers due to hardship.

5.6.5 Waiver Hearings

5.6.5.1 The hearing officer shall hold a public hearing in conformance with 7 **Del.C.** §6006.

5.6.5.2 The hearing shall be held in the county where the property is located.

5.6.5.3 No waiver may be granted unless the hearing officer, or in the case of an appeal to the Environmental Appeals Board, finds:

5.6.5.3.1 Strict compliance with the provision of these Regulations is inappropriate for cause; or

5.6.5.3.2 Special physical conditions render strict compliance unreasonable, burdensome, or impractical.

6.0 **LARGE SYSTEMS (≥ 2,500 GPD)**

6.1 A permit must be obtained from the Department prior to the construction, operation, maintenance or repair of any on-site wastewater treatment and disposal systems with daily design flow rates of ≥ 2,500 gallons. This Section details the necessary site suitability evaluations to determine siting of all types of large on-site wastewater treatment and disposal systems, including soil characterizations, hydrogeologic investigations, surface water assessment, required design parameters, legal documentation, permit application submittals, installation requirements, operation and maintenance procedures, monitoring requirements and annual reporting. This section is applicable to all types of on-site wastewater treatment and disposal systems.

This section applies to the permitting of large wastewater treatment and disposal system only. The permittee must obtain all necessary collection system permits separately in accordance with the State of Delaware's Department of Natural Resources and Environmental Control's Regulations Governing the Control of Water Pollution and any local or county requirements.

6.2 Site Characterization

The Department will facilitate compliance with these Regulations through a review of the proposed development project. The project should be coordinated with the Department early in the development process to avoid unnecessary conflicts and expense.

6.2.1 Letter of Intent

6.2.1.1 Any persons that propose to construct a large wastewater treatment and disposal system must submit a letter of intent prior to initiating any preliminary reconnaissance soil investigations.

6.2.1.2 The letter of intent must contain, at a minimum, the following details:

6.2.1.2.1 The name of the developer, utility and/or landowner.

6.2.1.2.2 The size, tax map number(s), 12 digit Hydrologic Unit Code (HUC) watershed name, zoning certificate for and location of the parcel(s).

6.2.1.2.3 Number of proposed lots (if applicable), proposed design flow rates and overall scope of project to include level of wastewater treatment and disposal method(s).

6.2.1.2.4 Projected start date of site/soil investigative work.

6.2.1.2.5 Name of the Class D soil scientist, Professional Geologist and Class C designer.

6.2.1.3 A soils and hydrogeological reconnaissance must be undertaken prior to actual fieldwork commencement. The reconnaissance must incorporate a combination of published data and actual field data to establish a general understanding of the site to allow selection of the most favorable areas available to site a large system.

6.2.1.4 Prior to the Soil Investigation Report (SIR) and/or Hydrogeologic Suitability Report (HSR) fieldwork commencement but, after a soils and hydrogeological reconnaissance have been completed, a preliminary meeting with the Class D.3 soil scientist, Class C designer, Delaware-licensed Professional Geologist, and DNREC personnel shall be held to discuss the scope of work for both investigations.

6.2.2 Soil Investigation Report (SIR)

A Soil Investigation Report must be submitted to the Department for review and approval for large on-site wastewater treatment and disposal systems (LOWTDS).

6.2.2.1 General Requirements

Work performed in connection with the SIR requires soil interpretation. These investigations must be completed by, or under the supervision of, a licensed Class D.3 soil scientist. Unless otherwise authorized by the Department, all soils and siting criteria for large systems shall comply with the following requirements:

6.2.2.2 The SIR shall contain, at a minimum, the following:

6.2.2.2.1 Site plan drawn to scale not to exceed one (1) inch equals 200 feet.

6.2.2.2.2 A topographic map with one (1) foot contour intervals unless the Department approves the use of an alternate scale. Topographic maps for spray irrigation sites may utilize two (2) foot contour intervals.

6.2.2.2.3 Location of all wells, well head protection areas, right of ways, watercourses, roads, storm water management features and on-site wastewater treatment and disposal systems within 150 feet of the perimeter of the property.

6.2.2.2.4 The proposed disposal area shall be mapped on a grid pattern of not more than 75 feet between observations. Spray irrigation projects must be mapped on a grid pattern at a minimum of one observation every four (4) acres.

6.2.2.2.5 Observations must be made using a number of auger borings and test pits to a minimum depth of six (6) feet. Some of these observations shall be extended to the ambient water table, when possible or practical, to augment the data collected during the HSR.

6.2.2.2.6 A minimum of one (1) double ring infiltration test per acre, or four (4) total, whichever is larger shall be conducted within the proposed disposal area (PDA). A representative number of double-ring infiltration tests must be approved by the Department for spray irrigation sites. The number of double-ring infiltration tests for a spray irrigation site shall be based upon soil variability. These tests must be performed within the most hydraulically restrictive horizon in the upper six (6) feet. A minimum of three (3) tests must be conducted for each interpretative mapping unit within the PDA.

6.2.2.2.7 Determination of an appropriate design percolation rate based upon infiltration tests, soil characteristics (textures, structure, etc.) and number of mapping units within the PDA. Certain site specific conditions may not warrant the testing and may be omitted from testing at the Departments discretion.

6.2.2.2.8 Depth of the limiting zone based on either a hydraulically restrictive layer or seasonally saturated materials based on redoximorphic features and/or piezometric study. The results of the site and soil analysis must be provided on the appropriate forms approved by the Department (e.g. Approval page).

6.2.2.2.9 Number of proposed lots, dwellings, expected gal/day/unit flow, design flow rate, anticipated disposal method and loading rate.

6.2.2.2.10 A general site location map to identify the area.

6.2.2.2.11 The location of any wetlands, refer to the 2007 Statewide Wetlands Mapping Project (SWMP) map, and State Tidal Wetlands maps, if applicable.

6.2.2.2.12 Identification of any limitation that could affect system performance and design considerations for the anticipated method of disposal.

6.2.2.3 Soil chemical testing of each mapping unit must be conducted. Samples must be collected from soil depths of 0–12 inches and 12–24 inches. These chemical tests determine the retention capacity of wastewater constituents in the soil. A minimum of three (3) composite samples for each mapping unit must be collected and tested. See Section 6.8.3 for testing parameters.

6.2.2.3.1 Soil chemical testing must be in accordance with Methods of Soil Analysis published by the American Society of Agronomy, Madison, Wisconsin. Other methods, properly documented, may be accepted upon approval by the Department.

6.2.2.4 Concerns regarding the suitability of the soils to assimilate the design flow must be addressed before the SIR may be approved by the Department.

6.2.2.5 The approved SIR is valid for 10 years from the date of the Department's approval unless the site is permitted for construction prior to this date. The approved SIR will then remain valid as long as the site is permitted. If the permit expires and is not renewed, the SIR also expires if SIR is more than 10 years old. If the site is not permitted within a 10 year period, a supplemental soil investigation report, as outlined in Section 6.2.2.5.1, must be submitted to the Department for approval provided no adverse effects have occurred to the site such as, but not limited to, cutting/filling activities, de-forestation or compaction of the proposed disposal area. The new SIR will be reviewed as outlined in Section 6.2.2.1.

6.2.2.5.1 The supplemental soil investigation report shall include;

6.2.2.5.1.1 Site plan drawn to scale not to exceed one (1) inch equals 200 feet.

6.2.2.5.1.2 Location of all wells, well head protection areas, right of ways, watercourses, roads, storm water management features and on-site wastewater treatment and disposal systems within 150 feet of the perimeter of the property.

6.2.2.5.1.3 The proposed disposal area (PDA) shall be mapped on a grid pattern of not more than 300 feet between observations. Spray irrigation projects must be mapped on a grid pattern at a minimum of one observation every 10 acres.

6.2.2.5.1.4 Observations must be made using a number of auger borings and test pits to a minimum depth of six (6) feet. Some of these observations shall be extended to the ambient water table, when possible or practical.

6.2.2.5.1.5 A minimum of one (1) double ring infiltration test shall be conducted within the PDA. A representative number of double-ring infiltration tests must be approved by the Department for spray irrigation sites. The number of double-ring infiltration tests for a spray irrigation site shall be based upon soil variability. These tests must be performed within the most hydraulically restrictive horizon in the upper six (6) feet.

6.2.2.5.1.6 Determination of an appropriate design percolation rate based upon infiltration tests, soil characteristics (textures, structure, etc.) and number of mapping units within the PDA.

6.2.2.5.1.7 Depth of the limiting zone based on either a hydraulically restrictive layer or seasonally saturated materials based on redoximorphic features and/or piezometric study. The results of the site and soil analysis must be provided on the appropriate forms approved by the Department (e.g. Approval page).

6.2.2.5.1.8 Number of proposed lots, dwellings, expected gal/day/unit flow, design flow rate, anticipated disposal method and loading rate.

6.2.2.5.1.9 The location of any wetlands, refer to the 2007 Statewide Wetlands Mapping Project (SWMP) map, and State Tidal Wetlands maps, if applicable.

6.2.2.5.1.10 Identification of any limitation that could affect system performance and design considerations for the anticipated method of disposal.

6.2.3 Hydrogeologic Suitability Report (HSR)

A Hydrogeologic Suitability Report must be submitted to the Department for review and approval for large on-site wastewater treatment and disposal systems (LOWTDS).

6.2.3.1 General requirements

Work performed in connection with the HSR shall be completed by, or under the supervision of, a Delaware-licensed professional geologist (PG). Reports and related documents must bear the seal and signature of the PG overseeing the project.

6.2.3.2 Site specific HSR requirements

General site and project details shall include, but not be limited to the following:

6.2.3.2.1 Proposed wastewater system details:

6.2.3.2.1.1 System type.

6.2.3.2.1.2 System dimensions.

6.2.3.2.1.3 Design flow.

6.2.3.2.1.4 Dosing schedule or loading rates.

6.2.3.2.1.5 Type of wastewater.

6.2.3.2.1.6 Level and type of treatment.

6.2.3.2.2 Regional (1:24,000 scale) topographic map showing the project site location.

6.2.3.2.3 Detailed (1:2,400 scale or larger) map(s) showing:

6.2.3.2.3.1 Property boundaries.

6.2.3.2.3.2 Roadways and easements.

6.2.3.2.3.3 Tax map parcel number(s).

6.2.3.2.3.4 Hypsography at one (1) foot contour intervals (must include existing and proposed elevations in proposed disposal area) unless the Department approves the use of an alternate scale. Hypsography for spray irrigation sites may utilize two (2) foot contour intervals.

6.2.3.2.3.5 Surface-water features.

6.2.3.2.3.6 Current land use.

6.2.3.2.3.7 Existing buildings.

6.2.3.2.3.8 On-site wells, both existing and proposed (including monitor/observation wells).

6.2.3.2.3.9 Test boring locations.

6.2.3.2.3.10 Area(s) evaluated for wastewater disposal.

6.2.3.2.3.11 Proposed disposal area layout, including spare area.

6.2.3.2.3.12 Scale and north arrow.

6.2.3.3 On and Off-Site Wells and Surface Water Bodies

6.2.3.3.1 All wells and surface-water bodies located within a 1,000 foot radius of the boundaries of the proposed wastewater disposal area must be identified and shown on an appropriately scaled map. The following well data must be tabulated: permit number, coordinates (in Delaware State Plane, meters, North American Datum of 1983 (NAD83)), water use (e.g. domestic, public, irrigation), total depth, screened interval, diameter, owner's name, owner's address, tax map parcel number. Procedures used to obtain this information shall be documented. All well completion reports and formation logs must be included.

6.2.3.3.2 The potential for impact to wells and surface water bodies shall be considered and addressed. If the Department determines it is necessary,

proposed methods to minimize the potential for impact to a well or surface water body must be submitted. In some instances, the Department may also require modeling to demonstrate that a well or surface water body will not be adversely impacted by a proposed discharge.

6.2.3.3.3 The well survey will remain valid from date of HSR submittal through a five (5) year period unless a construction permit has been issued by the Department. If construction has not been initiated prior to the expiration of the construction permit, a new well survey must be submitted for a permit extension or renewal.

6.2.3.4 Hydrogeologic Framework

6.2.3.4.1 Hydrostratigraphy

6.2.3.4.1.1 Geologic units containing the water-table aquifer and the first regional confining unit shall be identified and described in terms of formation name, lithology, approximate thickness, depositional environment, and stratigraphic relationships with other units. The saturated thickness of the water table aquifer shall be approximated based on available information. In some instances, the Department may require saturated thickness to be documented based on field data.

6.2.3.4.2 Test Borings

6.2.3.4.2.1 Test borings shall be drilled and logged to characterize the near-surface geology in the immediate vicinity of the proposed wastewater disposal area. Test boring requirements vary based on system type and capacity as follow:

6.2.3.4.2.1.1 All systems, including drip irrigation but excluding rapid infiltration basins (RIBs) and spray irrigation systems with proposed discharges ≥ 2,500 gpd and ≤ 20,000 gpd must have a minimum of three (3) 20-foot deep continuously sampled test borings.

6.2.3.4.2.1.2 All systems, excluding RIBs and spray irrigation systems with proposed discharges > 20,000 gpd must have a minimum of three (3) 40-foot deep continuously sampled test borings.

6.2.3.4.2.1.3 All RIB systems with proposed discharges ≥ 2,500 gpd must have a minimum of three (3) 40-foot deep continuously sampled test borings per proposed acre of disposal area.

6.2.3.4.2.1.4 All RIB systems with proposed discharges > 100,000 gpd must have at least one (1) 100-foot deep boring continuously sampled to 40 feet below land surface then every 5 feet thereafter. Boring may be terminated at a shallower depth if a confining bed is encountered < 100 feet below land surface.

6.2.3.4.2.1.5 All spray irrigation systems must have at least three (3) 20-foot deep continuously sampled test borings with an additional one (1) 20-foot boring per 10 acres of proposed disposal area.

6.2.3.4.2.2 Depending on site or project characteristics, greater test-boring depth or additional test borings may be required. If a restrictive lithology is identified it shall be assumed continuous unless demonstrated otherwise.

6.2.3.4.2.3 Subsurface data obtained from borings shall be collected using drilling techniques that preserve sample integrity (e.g. hollow-stem auger with split-spoon, direct-push, coring devices). Samples shall be described using a

generally accepted classification system (e.g. Unified Soil Classification System, USDA soil classification system). Test boring coordinates must be determined using a global positioning system (GPS) or standard survey methods and shall be reported in Delaware State Plane, meters, North American Datum of 1983 (NAD83). Test-boring logs shall include: sample descriptions, project name, test-boring identification, coordinates of test boring, general weather conditions, drilling method, name of drilling contractor, name of licensed driller in charge, and name of person logging samples and their association. If a well is completed in the borehole, a well completion report must be submitted to the Department containing "as-built" construction, borehole dimensions, well development methodology, and water levels (after completion and static).

6.2.3.4.3 Groundwater Flow

6.2.3.4.3.1 At a minimum, three (3) observation wells (OWs) shall be constructed to document flow direction and hydraulic gradient across the proposed disposal area. The Department may require additional wells depending on site or project characteristics. Wells may be completed during the test-boring investigation (see Section 6.2.3.4.2). The wells may also be used as groundwater monitoring wells provided they are constructed and classified according to Delaware Regulations Governing the Construction and Use of Wells and are located in positions suitable to provide representative samples. Well coordinates must be determined using a GPS or standard survey methods and shall be reported in Delaware State Plane, meters, North American Datum of 1983 (NAD83).

6.2.3.4.3.2 A top-of-casing (TOC) reference mark shall be established for each well and surveyed into the North American Vertical Datum of 1988 (NAVD 88). The land surface elevation adjacent to each well shall also be surveyed. All water-level measurements shall be taken to the nearest 0.01 foot from the surveyed reference mark on the well's TOC and reported in (i) feet below TOC, (ii) feet below ground surface, and (iii) feet above mean sea level (msl). Water-table contour maps shall be submitted to the Department based on water-level measurements representative of high, low, and average water-table conditions.

6.2.3.4.4 Wet-Season Water-Level Monitoring

6.2.3.4.4.1 Wet-season water-level monitoring shall be conducted at least weekly from January 1st through April 30th (see Section 6.2.3.4.3.2 for the collection and reporting of water level data). Wells installed for the purpose of establishing groundwater-flow direction may be used for wet season monitoring. Pressure transducers may be deployed to collect continuous water-level data.

6.2.3.4.4.2 On-site wet-season water-level data shall be correlated to the nearest unconfined well(s) with a long-term record (≥ 20 years).

6.2.3.4.4.3 The hydrograph shall include; the minimum, 10th, 25th, 50th (e.g., median), 75th and 90th percentiles and maximum water level for the long-term well(s) in conjunction with the on-site water-level data.

6.2.3.4.4.4 The peak on-site wet-season water level shall be corrected to the 10th percentile of the long-term record. Water levels ≤ 10th percentile shall not

be corrected.

6.2.3.4.5 Aquifer Properties

6.2.3.4.5.1 Aquifer properties (e.g. saturated hydraulic conductivity, transmissivity) shall be derived from on-site in-situ testing (e.g. slug test, pumping test). Wells installed to establish groundwater-flow direction may be used for aquifer testing, provided they are suitably constructed and necessary documentation is available. Standard methods shall be used to implement the testing and analyze the data. Testing methods shall be clearly documented, and all data shall be submitted digitally to the Department.

6.2.3.5 Ambient Groundwater Quality

6.2.3.5.1 Ambient groundwater quality shall be established by conducting a minimum of three (3) independent sampling events. Each sampling event shall be at least 30 days apart and include a minimum of three (3) wells. Wells installed for the HSR may be used for long-term groundwater compliance monitoring provided they are constructed and classified according to the Delaware Regulations Governing the Construction and Use of Wells and are located in positions suitable to provide representative samples.

6.2.3.5.2 Specific conductance, pH, temperature, dissolved oxygen, and oxidation reduction potential shall be measured using a calibrated field meter during well purging, which should be performed using either a submersible or peristaltic pump. Once the field parameters have stabilized, a groundwater sample shall be obtained and analyzed by a certified laboratory. Sampling requirements are as follows. Additional parameters may be required depending on the proposed wastewater characteristics.

Parameter	**Unit Measurement**	**Sample Type**
pH	S.U.	Field Test
Temperature	°F	Field Test
Specific Conductance	µS/cm	Field Test
Dissolved Oxygen Or Oxidation Reduction Potential	mg/L or mv	Field Test
Depth to Water Table	Hundredth of a foot	Field Test
Ammonia Nitrogen	mg/L	Grab
Arsenic	mg/L	Grab
Cadmium	mg/L	Grab
Chloride	mg/L	Grab
Chromium	mg/L	Grab
Copper	mg/L	Grab
Fecal Coliform	Col/100 ml	Grab
Hardness	mg/L	Grab
Iron	mg/L	Grab
Lead	mg/L	Grab
Manganese	mg/L	Grab
Mercury	mg/L	Grab
Nickel	mg/L	Grab
Nitrate as Nitrogen	mg/L	Grab
Nitrite as Nitrogen	mg/L	Grab
Organic Nitrogen	mg/L	Grab
Selenium	mg/L	Grab
Sodium	mg/L	Grab
Sulfate	mg/L	Grab
Total Dissolved Solids	mg/L	Grab
Total Nitrogen	mg/L	Grab
Total Coliforms	Col/100 ml	Grab
Total Phosphorus	mg/L	Grab
Total Suspended Solids	mg/L	Grab
Zinc	mg/L	Grab

6.2.3.5.3 Exceptions to these requirements may be considered by the Department. All data, including sampling logs, must be submitted in the HSR and Surface Water Assessment Report (SWAR) (see Section 6.2.4).

6.2.3.6 Groundwater Mounding Analysis

6.2.3.6.1 A groundwater mounding analysis must be performed to demonstrate that the required vertical isolation distance between the mounded water table and the disposal surface can be maintained (see Exhibit W).

6.2.3.6.2 The groundwater modeling requirements vary based on system type and capacity as follow:

6.2.3.6.2.1 All systems, excluding rapid infiltration basins (RIBs), with proposed discharges ≥ 2,500 gpd and ≤ 100,000 gpd must, at a minimum, use an analytical model.

6.2.3.6.2.2 All systems with proposed discharges > 100,000 gpd must use a numerical model.

6.2.3.6.2.3 All RIB systems must use a numerical model.

6.2.3.6.3 Selection of an analytical (e.g. Hantush equation) or numerical model (e.g. ModFlow) is at the discretion of the PG. Modeling protocol for the simulation of groundwater mounding must, at a minimum, include the following components (Anderson and Woessner, 1992):

6.2.3.6.3.1 Conceptual Model: A conceptual model must be developed based on the hydrogeologic framework and a preliminary design of the disposal system. Hydrologic boundaries of the groundwater-flow system must be defined in the conceptual model.

6.2.3.6.3.2 Model Documentation: The model selected for groundwater mounding analyses must be clearly referenced. Assumptions inherent in the selected model must be stated.

6.2.3.6.3.3 Model Design: Implementation of hydrologic properties and boundaries in the mathematical model must be documented to a degree that permits duplication of the modeling effort.

6.2.3.6.3.4 Calibration: Where applicable, methods used to calibrate the model must be stated, and calibration statistics must be furnished to the Department. Specifically, the root-mean-squared error (RMSE) and the normalized RMSE between modeled and observed hydraulic head must be presented.

6.2.3.6.3.5 Prediction: The model predicted groundwater mound(s) must be presented. Figures and/or tabulated data should be used in conjunction with written text to summarize the results.

6.2.3.6.4 The groundwater-mound elevation derived from the calibrated groundwater model shall be corrected with respect to the long-term wet-season water-table elevation determined in Section 6.2.3.4.4.4.

6.2.3.6.5 All RIB systems with a design flow ≥ 100,000 gpd must have a basin test performed to evaluate infiltration rates, the potential for perching and/or groundwater mounding.

6.2.3.6.5.1 The test basin(s) infiltration area must be a minimum of 10 foot diameter circle or a 10 foot by 10 foot square with the basin bottom completed at the same elevation as the proposed full-scale system.

6.2.3.6.5.2 The location of the basin(s) within the proposed disposal area shall be determined by the most hydraulically restrictive zone observed in the on-site borings (e.g., clay, silty clay, clayey silt).

6.2.3.6.5.3 A work plan must be submitted to the Department for approval prior to commencing the basin test. The work plan shall outline the proposed number of basins, size, location, construction methods, monitoring plan, dosing schedule and test duration.

6.2.3.7 Supplemental HSR Considerations

6.2.3.7.1 Due to unforeseen site complexity, wells and surface water bodies or system design the Department may require additional work beyond the HSR

requirements previously outlined.

6.2.4 Surface Water Assessment Report (SWAR)

A Surface Water Assessment Report (SWAR) must be submitted to demonstrate that nutrient performance standards for wastewater are being met at the post treatment location of a large on-site system or through natural attenuation processes prior to reaching the closest receiving surface water body in order to comply with surface water quality standards. Work performed in connection with the SWAR requires geologic interpretation. These assessments must be completed by, or under the supervision of, a Delaware-licensed professional geologist (PG). The SWAR and related documents must bear the seal and signature of the PG overseeing the project. The SWAR must be submitted to the Department for review and approval. The SWAR must contain the following:

6.2.4.1 Identification of the watershed(s) in which the system is to be located.

6.2.4.2 Ambient groundwater quality determination to include:

6.2.4.2.1 Total phosphorus concentrations.

6.2.4.2.2 Total nitrogen concentrations.

6.2.4.2.3 Oxidation-reduction potential or dissolved oxygen measurement.

6.2.4.3 Background soil testing for total phosphorus to include either:

6.2.4.3.1 Fertility Index Value (FIV); or

6.2.4.3.2 Mehlich 3 value.

6.2.4.4 Phosphorus fate and transport evaluation is required when both conditions below are met:

6.2.4.4.1 A FIV > 100 or soil test value > 100 ppm by Mehlich 3 test.

6.2.4.4.2 Groundwater total phosphorus concentrations are > 0.034 mg/L and indicate reducing conditions due to a low dissolved oxygen concentration, < 1 mg/L, or an oxidation-reduction potential < 200 mV.

6.2.4.5 One (1) of the following approaches:

6.2.4.5.1 Demonstration that the wastewater treatment facility will achieve applicable performance standards (as defined in the definitions and identified in Exhibit MM) at the post treatment location for nitrogen and, if required, phosphorus as determined in 6.2.4.4 or

6.2.4.5.2 Perform a comprehensive analysis to determine surface water impact. A meeting with Department personnel and the PG will be held to discuss work plan development. The comprehensive analysis will include determination of the fate and transport of nitrogen and phosphorus at design and peak flows by means of a groundwater contaminant flow and transport model. Calculation of the groundwater nutrient loading to the nearest surface water body including the resulting modeled groundwater and stream nutrient concentrations. It must be demonstrated that the proposed system will not further impair water quality with respect to dissolved oxygen, enterococcus bacteria, total nitrogen and total phosphorus.

6.3 Design Parameters

6.3.1 Standard requirements

6.3.1.1 A large on-site wastewater treatment and disposal system is required when:

6.3.1.1.1 The proposed number of lots is ≥ 100 or

6.3.1.1.2 The overall density of the subdivision or planned unit development is more than one (1) dwelling unit per one half (½) acre.

6.3.1.2 Upon receiving a permit application, the Department may require a meeting with the Class D.3 soil scientist, Professional Geologist, and Class C designer to discuss the project.

6.3.1.3 Permit applications must demonstrate the system is designed in accordance with the prescribed system type and design considerations as specified in the approved SIR, HSR and SWAR for that parcel.

6.3.1.4 Disposal Area Determination

6.3.1.4.1 For dwellings consisting of up to four (4) bedrooms, the design peak daily flow rate to be utilized for the sizing of the disposal area(s) is **300** gallons per day (gpd) for each equivalent dwelling unit (EDU). Dwellings with higher numbers of bedrooms must seek Departmental approval.

6.3.1.5 Treatment Facility Sizing

6.3.1.5.1 The design average daily flow rate for sizing of the wastewater treatment plant is **220** gpd/EDU regardless of dwelling construction, treatment method or similar type projects.

6.3.1.5.2 A system may be designed in phases (see Section 6.5.11).

6.3.1.6 Large systems shall be designed with influent and effluent wastewater flow metering to evaluate treatment facility performance. Flow data must be recorded, totalized and reported to the Department by the licensed operator.

6.3.1.6.1 Where actual calibrated metered flow data indicating peak and average daily flows over the most three year period are available for a similar facility, such flow data may be substituted for the wastewater flows listed in this Section subject to the approval of the Department. When ranked in descending order, the adjusted design peak daily flow shall be determined by taking the numerical average of the daily readings within the upper 10% of the daily readings.

6.3.1.7 All new large wastewater treatment facilities shall adhere to Exhibit MM for performance standard criteria.

6.3.1.8 Any large system permitted prior to the promulgation of this regulation that does not meet the groundwater monitoring requirements in accordance with Section 6.8.1, the owner/operator will have up to 12 months from date of promulgation to bring system into compliance with the groundwater monitoring requirements.

6.3.1.9 All wastewater containing domestic wastes must undergo disinfection prior to being discharged to the disposal system with the exception of subsurface disposal methods. All disinfection must reduce fecal coliforms to ≤ 200 col/100 mL. Wastewater containing domestic wastes intended for spray irrigation onto unlimited public access sites must be disinfected prior to being discharged to the irrigation system to reduce fecal coliforms to ≤ 20 col/100mL (see Exhibit LL).

6.3.1.10 Solids, sludges, filter backwash or other pollutants removed in the course of treatment or control of wastewater shall be disposed of in a manner such as to prevent any pollutant from entering the surface water or groundwater and to comply with applicable federal or state laws and regulations.

6.3.1.11 Large system subsurface absorption facilities shall be designed with pressure distribution.

6.3.1.12 All mechanical tanks, chambers, vaults and pits proposed for a large system must be evaluated to determine if remote sensors/alarms are necessary to identify high water levels in order to avoid overflows. Sensors shall be connected to a notification mechanism that will notify the licensed wastewater operator if a high

water level is reached. All lift stations and pumping chambers shall be equipped with remote sensors and notification mechanisms.

6.2.1.13 An alternative power source, which is sufficient to operate the wastewater treatment and disposal facilities, shall be available. If such alternative power source is not available, the permittee shall halt, reduce or otherwise control production and/or all discharges upon the reduction, loss, or failure of the primary source of power to the wastewater facilities.

6.3.1.14 Construction Permit

5.3.1.14.1 A construction permit application, plans and specifications and design engineer report with applicable fees must be submitted to the Department if the construction permit has expired or changes have occurred.

6.3.1.15 Operation Permit

6.3.1.15.1 Once an operation permit has been issued and the wastewater flow reaches 80% of the permitted treatment capacity for the constructed phase based on a period of seven (7) consecutive days, the permittee must submit written notification to the Department. The written notification must include a work plan for construction of the next permitted phase. The permittee must submit a construction permit application, plans and specifications and Design Engineer Report with applicable fees if the next phase has not yet been permitted or if there are changes to the previously permitted design.

6.3.1.15.2 Any flow above the permitted flow for a phase shall not be allowed to be discharged to the system until construction is completed on the following phase and an operating permit has been issued or amended by the Department for the next phase.

6.3.1.15.3 Effluent nitrogen and phosphorus concentration limits established by an applicable performance standard or approved SWAR will be based on the actual, metered influent flow to the large on-site wastewater treatment and disposal system. Once a system reaches a monthly average flow during any calendar month that exceeds the 20,000 gpd flow threshold the effluent nitrogen and phosphorus concentration limits will be reduced to comply with the established levels of the performance standards or approved SWAR, as applicable.

6.3.1.16 A 100% spare area must be maintained or set aside for full system replacement for all systems except spray irrigation in the event the initial system is taken off-line or a catastrophic failure occurs. The spare area should not be in the immediate vicinity of the initial system when the groundwater mounding analysis indicates groundwater mounding comes to within three (3) feet of the point of compliance of any system except spray irrigation. Upgrading the initial system(s) will not suffice as replacement area.

6.3.1.17 Vertical separation distances are measured between the point of compliance for each system type and the projected mounded groundwater elevation (see Exhibit W).

6.3.1.18 Sand-lining > 12 inches, except LPP's, will be allowed on a case by case basis if slowly permeable substratum is present in the proposed disposal area, however one (1) foot of unsaturated native soil must be maintained above the projected mounded groundwater elevation.

6.3.1.19 Engineered sandy fill must be used for replacing excavated native materials.

6.3.1.20 Minimum search distances for locating wells and watercourses for all large systems is 1,000 feet.

6.3.1.21 Minimum separation/buffer distances must be adhered to when siting all large system components (see Exhibit C).

6.3.1.22 A licensed Class E.4 system contractor must oversee the installation of all large systems.

6.3.2 System specific design parameters

6.3.2.1 Subsurface disposal

6.3.2.1.1 The absorption facilities shall be divided into relatively equal areas.

6.3.2.1.2 The length to width ratio for seepage beds and elevated sand mounds shall be 4:1 or greater.

6.3.2.1.3 Each unit shall receive no more than 1,300 gallons per day if seepage beds are utilized and no more than 2,600 gallons per day if seepage trenches are utilized.

6.3.2.1.4 Effluent distribution shall alternate between all disposal area units.

6.3.2.1.5 Each absorption facility shall be at least 10 feet apart.

6.3.2.1.6 The replacement (spare) disposal area must be divided in relatively equal units.

6.3.2.1.7 Refer to Section 5.0 for additional design considerations and construction requirements.

6.3.2.2 Rapid Infiltration Basins (RIB)

6.3.2.2.1 Design considerations

6.3.2.2.1.1 There must be a minimum of four (4) basins constructed. See Section 6.3.1.16 for spare area requirements.

6.3.2.2.1.2 RIBs shall have a 72-hour resting period between doses unless otherwise approved by the Department. Hydraulic loading and resting cycles shall be developed so as to restore operating infiltration rates of the RIB system to design levels by the end of the resting period.

6.3.2.2.1.3 RIBs are recommended to be configured in such a way as to reduce the effects of groundwater mounding. Basins should be configured in a strip configuration perpendicular to the direction of groundwater flow.

6.3.2.2.1.4 All berms must be at least two (2) feet tall, eight (8) feet wide (if providing access to that basin), and have a 3:1 slope ratio enabling light vehicular traffic for maintenance (e.g. mowing). Berms shall be compacted to prevent seepage and should be graded so drainage runoff flows away from the RIB area.

6.3.2.2.1.5 No filling or adding to original grade is allowed; therefore, the basin bottom must be leveled to the lowest elevation identified in the basin. Leveling of the basin bottom may need to be performed but not to exceed six (6) inches of additional engineered sandy fill.

6.3.2.2.1.6 The RIBs must be enclosed by fencing with a minimum height of 42-inches to prevent access to the area by foot or vehicular traffic. Fencing design must be approved by the Department. The entrance to the RIBs must be locked and signs must be posted every 200 feet warning the public that the enclosed area is utilized for the disposal of treated wastewater.

6.3.2.2.1.7 A silt fence must be installed around the perimeter of the basin between the berm and the basin bottom to prevent eroded sediments from

moving into the basin during construction. The silt fence line must be shown in the construction permit application.

6.3.2.2.1.8 The permit application must identify the advantages of bare soil, vegetation or other media, as approved by the Department, on the basin bottom and which method is to be utilized. Additionally, a justification of why the particular method selected was chosen must be included.

6.3.2.2.1.9 If vegetation is grown in the basin, it must be limited to perennial grasses or as approved by the Department. Plants which develop woody root systems are prohibited.

6.3.2.2.1.10 A maintenance schedule for the removal of cuttings from the basin must be submitted to and approved by the Department, if applicable.

6.3.2.2.1.11 All berms must be seeded with perennial grasses or other suitable vegetation as determined appropriate by the Department to stabilize slopes and prevent erosion.

6.3.2.2.1.12 Berms must be maintained to prevent the establishment of plants with woody root systems.

6.3.2.2.1.13 Provisions shall be made in the design to ensure uniform distribution of wastewater across the entire bottom area of the basin by incorporating multiple discharge locations.

6.3.2.2.1.14 RIBs must be equipped to divert incoming wastewater to other basins or be completely shut off.

6.3.2.2.1.15 All wastewater containing domestic wastes must undergo disinfection prior to being discharged to a RIB.

6.3.2.2.2 Operation and Maintenance

6.3.2.2.2.1 The basin surface must be maintained as necessary to remove any impedance to infiltration. Any maintenance activity, scheduled or emergency must be performed when the basin is dry.

6.3.2.2.2.2 All basin maintenance activities must be documented in the log book and be available upon request for review.

6.3.2.2.2.3 If basins are vegetated, the grass must be cut regularly; cuttings collected and removed in accordance with approved schedule (see Section 6.3.2.2.1.10).

6.3.2.2.2.4 Berms must be properly maintained and periodically inspected for areas of settling, erosion, burrowing animal disturbance, etc.

6.3.2.2.2.5 Periodic infiltration testing may be required by the Department.

6.3.2.3 Spray irrigation

Wastewater spray irrigation systems may be utilized on agricultural land, forest lands and other designated areas.

6.3.2.3.1 Treatment standards

The applicant must develop and submit for the Department's review and approval, an operating protocol designed to ensure the high-level disinfection criteria is met before the wastewater is released to the storage system or to the wastewater reuse system.

6.3.2.3.1.1 Domestic Wastewater

6.3.2.3.1.1.1 All wastewaters containing domestic wastes shall receive, at a minimum, but not limited to biological treatment and disinfection prior to irrigation. This level of treatment is required to protect the health of

persons who may come in contact with the irrigated wastewater and to reduce the potential for odors in storage ponds and during irrigation.

6.3.2.3.1.2 Industrial Wastewater

6.3.2.3.1.2.1 The Department will evaluate all industrial wastewaters to determine the required level of treatment. All industrial system permit applications must contain copies of work place chemical lists. Treatment requirements will be based on factors including, but not limited to, wastewater constituency, odors, nuisance conditions and adverse impacts to groundwater or soil, such as clogging and runoff.

6.3.2.3.2 Wastewater Effluent Standards

6.3.2.3.2.1 Wastewater effluent standards for domestic and municipal wastewater for BOD_5, TSS, and disinfection are based on site access control. In cases where public access cannot be restricted, such as landscaped areas, golf courses, parks, and roadway medians, levels of wastewater pretreatment need to be increased in order to assure comparable public health safeguards exist (see Exhibit LL).

6.3.2.3.2.2 The point of compliance for monitoring effluent standards is after treatment and prior to storage unless otherwise specified in the permit or for effluent distribution in accordance with Section 6.11.

6.3.2.3.2.3 Wastewater reclamation standards for domestic and municipal wastewater for BOD_5, TSS and disinfection are based on site access control.

6.3.2.3.2.4 Automatic diversion of wastewater that fails to meet the operating criteria must be included in the system design.

6.3.2.3.3 Public Access

6.3.2.3.3.1 Limited public access sites are sites where access by the public is controlled and only available to authorized personnel, including operations staff, laboratory staff and farm personnel.

6.3.2.3.3.1.1 Suitable barriers, access road gates, or “No Trespassing” signs must be provided at all limited access site entry points.

6.3.2.3.3.1.2 The treated wastewater utilized for limited public access sites must meet the following daily permissible average concentrations:

6.3.2.3.3.1.2.1 The 5-day Biochemical Oxygen Demand (BOD_5) of the treated wastewater must not exceed 50 mg/L.

6.3.2.3.3.1.2.2 Disinfection of wastewaters containing domestic waste is required to yield a discharge not to exceed 200 col/100 mL Fecal Coliform.

6.3.2.3.3.1.2.3 The treated wastewater must not contain more than 50 mg/L of Total Suspended Solids for mechanical systems and 90 mg/L of Total Suspended Solids for ponds.

Parameter	**Daily Permissible Average Concentration**
BOD_5	50 mg/L
Fecal Coliform	200 colonies/100 mL
Total Suspended Solids	90 mg/L for ponds, 50 mg/L for mechanical

6.3.2.3.3.2 Unlimited public access

Unlimited public access sites are those landscaped areas such as golf courses, residential lawns, cemeteries, parks, and highway medians which may not have adequate buffer zones and are accessible to the public at all times.

6.3.2.3.3.2.1 Direct irrigation onto people and pets is to be avoided.

6.3.2.3.3.2.2 All wastewater used for irrigation on unlimited access sites must be biologically treated, filtered and disinfected. Any advanced treatment technology achieving the same treatment levels will be considered by the Department.

6.3.2.3.3.2.3 Disinfection

6.3.2.3.3.2.3.1 If chlorine is utilized for disinfection, a total chlorine residual ranging between 0.5 and 4 mg/L must be maintained at the compliance monitoring point prior to irrigation. If ultraviolet disinfection is utilized, ultraviolet disinfection must be performed following storage with an ultraviolet dose of 100 mJ/cm^2 or greater.

6.3.2.3.3.2.3.2 If chemical disinfection is utilized, continuous on-line monitoring of residual disinfection concentrations must be provided at the compliance monitoring point.

6.3.2.3.3.2.3.3 If ultraviolet disinfection is utilized, routine sampling for the effectiveness of disinfection must be performed at the compliance monitoring point.

6.3.2.3.3.2.4 The treated wastewater utilized for unlimited public access sites must meet the following daily permissible average concentrations:

6.3.2.3.3.2.4.1 The 5-day Biochemical Oxygen Demand (BOD_5) of the treated wastewater must not exceed 10 mg/L.

6.3.2.3.3.2.4.2 Disinfection of wastewaters containing domestic waste is required to yield a discharge not to exceed 20 col/100 mL Fecal Coliform.

6.3.2.3.3.2.4.3 The treated wastewater must not contain more than 10 mg/L Total Suspended Solids.

6.3.2.3.3.2.4.4 The turbidity of the treated wastewater must not exceed five (5) NTU.

Parameter	**Daily Permissible Average Concentration**
BOD_5	10 mg/L
Fecal Coliform	20 colonies/100 mL
Total Suspended Solids	10 mg/L
Turbidity	5 NTU

6.3.2.3.3.2.5 Treatment facilities for wastewater to be used on unlimited access sites shall include continuous on-line monitoring for turbidity at the compliance monitoring point.

6.3.2.3.4 Nitrogen

6.3.2.3.4.1 The Design Engineer Report must indicate the expected range of

nitrogen in the treated wastewater.

6.3.2.3.4.2 Spray irrigation systems must be designed to ensure the performance standards are adhered to as outlined in Exhibit MM.

6.3.2.3.4.3 Nitrogen Balance

6.3.2.3.4.3.1 Percolate total nitrogen concentration must be estimated in a monthly nitrogen balance spreadsheet. The nitrogen balance must take into consideration the following: the average design wastewater loading, nitrogen concentration in effluent, average annual precipitation and fixation, application of all fertilizers, proposed cover crop and cover crop management scheme (see Exhibit GG).

6.3.2.3.4.3.2 In the nitrogen balance calculations, all nitrogen not lost to denitrification, ammonia volatilization, evapotranspiration or plant uptake must be assumed to leach into the groundwater as nitrate nitrogen.

6.3.2.3.4.3.3 For row and forage crop systems, assumed losses to denitrification should not exceed 15% of the total nitrogen applied.

6.3.2.3.4.3.4 In forest systems, assumed denitrification losses should not exceed 25%.

6.3.2.3.4.3.5 Assumed losses to ammonia volatilization should not exceed 5% of the total ammonia nitrogen applied.

6.3.2.3.4.3.6 Soil storage of nitrogen should be assumed to be zero.

6.3.2.3.4.3.7 The source of the monthly plant nitrogen uptake rate(s) used for design must be referenced in the Design Engineer Report.

6.3.2.3.5 Ponds

6.3.2.3.5.1 Treatment ponds may be aerated, facultative or a combined aerated-facultative system.

6.3.2.3.5.2 Sizing of completely and partially mixed aerated ponds must be based on first-order removal rate kinetic equations and the expected annual temperature variation.

6.3.2.3.5.3 Facultative pond cells must have an appropriate length to width ratio consistent with current engineering standards to minimize short circuiting.

6.3.2.3.5.4 Facultative pond cells must have a depth between three (3) and five (5) feet.

6.3.2.3.5.5 All systems must have provisions for storage or an alternative permitted disposal method(s).

6.3.2.3.5.6 Ponds used for treatment and/or storage must have impermeable synthetic liners having a hydraulic conductivity equal to or less than 1×10^{7} cm/sec.

6.3.2.3.5.7 At least three (3) feet of freeboard, measured from the lowest point of the berm, is required for all ponds. The lowest point of the berm must be determined and marked.

6.3.2.3.5.8 The base of any pond, at its lowest point, must be at least two (2) feet above the seasonal high water table.

6.3.2.3.6 Cover Crop Selection and Management

6.3.2.3.6.1 Crops irrigated with treated domestic wastewater must not be intended, utilized, sold or distributed for direct human consumption.

6.3.2.3.6.2 Spray field cover crops require management and periodic

harvesting to maintain optimum growth conditions.

6.3.2.3.6.3 Forage crops must be harvested and removed from the irrigation field(s) at least twice a year. Crops harvested must be removed from the irrigation site within six (6) months of harvest.

6.3.2.3.6.4 Sufficient spray field area or storage capacity must be provided in the design to allow for harvesting and the regeneration cycle.

6.3.2.3.6.5 Spray irrigation fields must be assessed every five (5) years to determine if soils renovation or maintenance is necessary. Assessments must address crop consistency, soil monitoring results, infiltration, and compaction.

6.3.2.3.6.6 Disturbed areas in forest systems must be initially replanted or covered with thick mulch for succession to forest vegetation.

6.3.2.3.6.7 Pine forest systems should be harvested at 20 to 25 year intervals.

6.3.2.3.6.8 Hardwood forest systems should be harvested at 40 to 60 years.

6.3.2.3.6.8.1 Due to soil exposure and compaction as a result of any forest harvesting activities, wastewater loadings must be reduced following harvesting until the hydraulic capacity of the site is restored.

6.3.2.3.6.9 Forage crops irrigated with treated domestic wastewater must be harvested before feeding to livestock.

6.3.2.3.6.10 The grazing of animals on a site actively irrigated with treated domestic wastewater is prohibited.

6.3.2.3.6.11 If domestic treated wastewater applications are terminated, the facility must adhere to the following precautions:

6.3.2.3.6.11.1 Grazing by animals (other than lactating dairy cows) whose products are consumed by humans is prohibited for one (1) month.

6.3.2.3.6.11.2 Grazing by lactating dairy cows is prohibited for one (1) year.

6.3.2.3.6.11.3 Growing vegetables and root crops, which are eaten raw, is prohibited for 18 months.

6.3.2.3.6.11.4 Hay must not be cut for four (4) days after applications.

6.3.2.3.6.11.5 If the wastewater contains more than 25% industrial waste (excluding food processing industries) the forage must be monitored for potential toxicity problems to animals or possible food-chain effects.

6.3.2.3.6.12 Unmanaged, volunteer vegetation is not an acceptable spray field cover.

6.3.2.3.7 Soils

6.3.2.3.7.1 Soils with a permeability < .02 inches/hour are prohibited from irrigation of treated wastewater.

6.3.2.3.7.2 Soils with a depth to water < 24 inches are prohibited from irrigation of treated wastewater.

6.3.2.3.7.3 Equipment limitations and erosion potential dictate maximum slopes for wastewater spray fields to be limited to 7% for row crops, 15% for forage crops and 30% for forests.

6.3.2.3.7.4 Design considerations must be taken for depressions to preclude ponding.

6.3.2.3.8 Land limiting constituents

6.3.2.3.8.1 Annual loading rates and site life limitations must be determined for phosphorus and heavy metals present in the wastewater (see Exhibit HH).

6.3.2.3.8.2 Phosphorus

6.3.2.3.8.2.1 Phosphorus may become the land limiting constituent (LLC) of the irrigation site over time. Conditions which indicate that phosphorus has become the LLC include:

6.3.2.3.8.2.1.1 A rise in phosphorus concentrations as indicated by groundwater monitoring well test results over three consecutive sampling periods; or

6.3.2.3.8.2.1.2 Phosphorus adsorption test results indicate that the phosphorus adsorption capacity of the upper 24 inches of the soil column has decreased to a level at which the adsorption capacity is no longer sufficient to assimilate excess phosphorus not taken up by the vegetation.

6.3.2.3.8.2.1.3 Once phosphorus has become the LLC the phosphorus application rate must be reduced to crop phosphorus uptake levels. Under such conditions, high phosphorus utilization vegetation may be grown to increase the phosphorus assimilative capacity.

6.3.2.3.8.3 Heavy Metals

6.3.2.3.8.3.1 The site assimilative capacity for heavy metals (Cadmium, Copper, Lead, Nickel and Zinc) must be calculated on a constituent by constituent basis to approximate the site life for each spray irrigation field.

6.3.2.3.8.3.2 The cumulative metal loadings must not exceed the levels set forth in Exhibit HH.

6.3.2.3.8.3.3 Spray irrigation activities must be terminated when any one of the cumulative metal limits is reached unless otherwise mitigated.

6.3.2.3.9 Lysimeters

6.3.2.3.9.1 To allow for percolate monitoring, a minimum of one (1) pore-liquid sampler (lysimeter) as defined in ASTM Standard (D 4696) (Standard Guide for Pore-Liquid Sampling from the Vadose Zone) must be installed within the disposal area prior to system operation.

6.3.2.3.10 Buffer requirements

Buffer zones are required to control aerosols. Buffer zones must be vegetated.

6.3.2.3.10.1 The following buffer zones must be provided for limited public access spray irrigation sites:

6.3.2.3.10.1.1 A 150 foot buffer must be maintained between the edge of the wetted field area and all property boundaries.

6.3.2.3.10.1.2 A 150 foot buffer must be maintained between the edge of the wetted field area and the shoulder of internal and external public roads. Buffers from highways must be measured from the outer edge of the shoulder or edge of the highway, if no shoulder.

6.3.2.3.10.1.3 A 150 foot buffer must be maintained between the edge of the wetted field area and any public supply well and a 100 foot buffer from any individual domestic well unless other jurisdictions dictate greater distances.

6.3.2.3.10.1.4 Internal roads that are closed to public use do not require buffer zones.

6.3.2.3.10.1.5 A 100 foot buffer is required between the wetted edge of spray fields and the edge of any perennial lake or stream or ephemeral drain.

6.3.2.3.10.1.6 A 50 foot buffer is required between spray fields and the edge of any channelized, intermittent watercourse.

6.3.2.3.10.1.7 If an intermittent watercourse were to become perennial, the 100 foot buffer requirement will apply.

6.3.2.3.10.1.8 A 50 foot buffer is required between the wetted field area and the edge of any wetlands.

6.3.2.3.10.2 Lesser distances may be permitted if the design and operations demonstrate that aerosols will be contained within the site and/or no threat to public health or the environment exists.

6.3.2.3.10.3 Buffer zones for unlimited public access sites are not normally required except for Sections 6.3.2.3.10.1.5, 6.3.2.3.10.1.6, 6.3.2.3.10.1.7 and 6.3.2.3.10.1.8 however other buffers may be necessary depending on site constraints.

6.3.2.3.10.4 Buffer zones around pretreatment facilities shall be designed for aerosol containment, noise abatement and nuisance control.

6.3.2.3.11 Water Balance Calculations

6.3.2.3.11.1 The Design Engineer Report must contain monthly water balance calculations to determine the design hydraulic loading.

6.3.2.3.11.2 Average monthly values for potential evapotranspiration generated from vegetative, soil and climatological data are to be used in the water balance calculations. A list of evapotranspiration references is presented in Exhibits II & JJ.

6.3.2.3.11.3 The Department requires the use of five (5) year return monthly precipitation values in water balance calculations. Five (5) year return values are defined as the 80th percentile value in a 30 year ranked listing of historical monthly precipitation data (see Exhibit KK).

6.3.2.3.12 Storage

6.3.2.3.12.1 Municipal systems require a minimum of 45 days storage, unless other disposal options are permitted.

6.3.2.3.12.2 All facilities must demonstrate through monthly wastewater irrigation rate calculations that adequate storage is provided for design flows.

6.3.2.3.12.3 A separate off-line system for storage of reject wastewater must be provided at all unlimited access sites unless another permitted reuse system or effluent disposal system is capable of receiving the reject wastewater. At a minimum, this capacity must be the volume equal to two days flow at the average daily design flow rate of the treatment facility. Provisions for re-circulating the reject wastewater back to the treatment facility for further treatment may be incorporated into the design of the facility.

6.3.2.3.12.4 The Design Engineer Report must demonstrate through monthly calculations that there is sufficient spray acreage to eliminate the average daily design flow and the total storage volume within a 90 day period via irrigation.

6.3.2.3.13 Other System Design Considerations

6.3.2.3.13.1 The source of all data used and assumptions made for design

must be referenced in the Design Engineer Report.

6.3.2.3.13.2 Signs

6.3.2.3.13.2.1 Limited Public Access: Signs must be posted on all limited public access spray fields utilized to irrigate treated wastewater to prohibit public contact. The signs must indicate that the water being irrigated is treated wastewater. The signs must be legible. Limited public access sites must have signs posted on the perimeter every 1,000 feet, at a minimum, and at all entry points. Unlimited public access sites must have signs posted at all entry points.

6.3.2.3.13.2.2 Unlimited Public Access: Unlimited public access sites must have advisory signs posted at all entry points that indicate the site is spray irrigated with treated wastewater. Verbiage should include the following wording: "RECYCLED WASTEWATER – DO NOT DRINK". Alternate verbiage may be used if approved in writing by the Department.

6.3.2.3.13.3 Fencing is required at treatment facilities, pump stations and storage/treatment ponds. Fencing of spray fields is not required.

6.3.2.3.13.4 All domestic, irrigation, commercial, industrial, and public wells must be identified within 1,000 linear feet from the perimeter of the irrigation fields.

6.3.2.3.13.5 Shallow and poorly constructed wells within the land treatment system will require proper abandonment.

6.3.2.3.13.6 The design percolation rate at land treatment sites with seasonal high groundwater at depths greater than five (5) feet (after consideration of mounding due to wastewater irrigation) be no more than 10% of the mean saturated hydraulic conductivity of the most limiting layer within the first five feet from the surface.

6.3.2.3.13.7 The Design Engineer Report must include an emergency contingency plan to demonstrate preparedness in the event that the wastewater treatment facility may experience a significant natural occurrence.

6.3.2.3.13.7.1 The contingency plan must address, but must not be limited to, extended periods of excessive precipitation, and extended periods of subfreezing temperatures causing prolonged periods of frozen soil conditions.

6.3.2.3.13.7.2 The contingency plan must delineate the wastewater treatment facilities available options to reduce, eliminate and/or prevent non-compliant conditions.

6.3.2.3.13.8 Wastewater application rates

6.3.2.3.13.8.1 Wastewater application rates may not exceed a maximum of 2.5 inches/acre/7 day period absent Department written authorization.

6.3.2.3.13.8.2 There must be a sufficient rest period between applications to prevent field saturation from occurring in any part of the field.

6.3.2.3.13.8.3 Sites that experience direct runoff as a result of wastewater irrigation must reduce application rates.

6.3.2.3.13.8.4 The design wastewater application rates must account for site specific:

6.3.2.3.13.8.4.1 Precipitation – normal and 5 year return (P5).

6.3.2.3.13.8.4.2 Evapotranspiration.

6.3.2.3.13.8.4.3 Design percolation rate.
6.3.2.3.13.8.4.4 Nitrogen loading and other constituent loading limitations.
6.3.2.3.13.8.4.5 Groundwater and drainage conditions.
6.3.2.3.13.8.4.6 Influent wastewater flows.

6.3.2.3.13.9 The collection and channelization of irrigated wastewater for purposes other than retreatment is prohibited.

6.3.2.3.13.10 Direct application of treated wastewater to drainage ditches, any water bodies, and wetlands is prohibited.

6.3.2.3.13.11 Irrigation on frozen or saturated soils is prohibited.

6.3.2.3.13.12 Surface water bodies adjacent to wastewater spray irrigation sites must be monitored by the wastewater treatment facility. The Department may deem necessary the monitoring of other surface water bodies in close proximity to the spray irrigation site. Monitoring must be performed upgradient and downgradient of the irrigation site.

6.3.2.3.13.13 Spray nozzle pressure variation due to friction loss and static head for solid set, uniformly spaced systems should not exceed plus or minus 10% of the design spray nozzle pressure. If this criterion cannot be met, sprinkler head spacing and spray nozzle diameters must be adjusted or flow control valves be used to ensure a uniform application covering the entire application area.

6.3.2.3.13.14 The use of secondary mist nozzles on impact sprinklers is prohibited.

6.3.2.3.13.15 The layout of spray fields and spray field roads shall provide easy access for inspection and maintenance of the distribution system. Spray field access roads must be designed for all weather use.

6.3.2.3.13.16 A recording device is required to measure the total volume of treated wastewater applied to each spray irrigation pivot/zone.

6.3.2.3.13.17 A recording device is required to measure the total volume of treated wastewater entering into storage.

6.3.2.3.13.18 A low pressure detection system to automatically shut down irrigation pumps in the event of force main, sub-main or lateral blowout is required.

6.3.2.3.13.19 A high pressure shut-off at the irrigation pump station must also be provided.

6.3.2.3.13.20 Above ground piping systems must drain when depressurized. Pipe drains shall discharge either to the spray fields or other identified vegetated areas and must not produce a runoff.

6.3.2.3.13.21 Sites with seasonal high groundwater less than five (5) feet deep (after consideration of mounding due to wastewater irrigation) must perform depth to water monitoring prior to spray irrigation to ensure the depth to water is greater than two (2) feet during irrigation.

6.3.2.3.13.22 Prior to pumping to the spray field distribution system, materials that can clog distribution pipes or spray nozzles must be removed, if applicable. Screening to remove solids greater than one-third ($^1/_3$) the diameter of the smallest sprinkler nozzle is recommended. Screenings must be captured and removed for disposal (method of disposal must be described

in detail).

6.3.2.3.13.23 The application of commercial fertilizers on spray irrigation fields is prohibited unless prior written approval from the Department is granted.

6.3.2.3.14 Leased Agricultural Sites

6.3.2.3.14.1 All sites to be leased for utilization for spray irrigation of treated wastewater are subject to the application process and provisions set forth in this regulation.

6.3.2.3.14.2 The applicant shall provide a map depicting each field and crop type proposed for treated wastewater disposal.

6.3.2.3.14.3 The applicant shall provide a copy of a lease/contract between the applicant and the owner of the site. The lease/contract must include the following:

6.3.2.3.14.3.1 The acreage of each field to be utilized.

6.3.2.3.14.3.2 The crop types to be grown on each field.

6.3.2.3.14.3.3 The farmer that will be growing and maintaining the crops.

6.3.2.3.14.3.4 The minimum volume of treated wastewater per each calendar month the farmer will accept on each crop.

6.3.2.3.14.3.5 The minimum amount of treated wastewater the farmer must accept to receive full payment of any amount negotiated for land use if applicable.

6.3.2.3.14.3.6 A delineation of ownership, operation and maintenance of spray irrigation equipment and piping.

6.4 Legal Documentation

6.4.1 Owner/Operators of large and/or community on-site wastewater treatment and disposal systems must provide legal documentation addressing long term management of the system. Public wastewater utilities subject to the jurisdiction of the Delaware Public Service Commission (PSC) may be exempt from this section and, if exempt, shall comply with Section 6.4.2. Municipalities and political subdivisions are exempt from Section 6.4.

6.4.1.1 Applications for permits to construct and operate large and/or community on-site wastewater treatment and disposal systems shall include documentation addressing construction, ownership, operational responsibility, transfer of ownership, maintenance, repairs, operation, performance and funding of the on-site wastewater treatment and disposal system through the design life of the system. This documentation shall be in the form of a Binding Agreement between the applicant for the construction and/or operation permits, and owner/operator.

6.4.1.1.1 The Binding Agreement must:

6.4.1.1.1.1 Identify a responsible party (Public Wastewater Utility, Home Owners Association, property owner, etc.) that will assume full responsibility for the operation, management, maintenance and repairs of the large and/or community on-site wastewater and disposal system, the wastewater system, upon satisfactory completion of the construction, by providing:

6.4.1.1.1.1.1 Full name and business address of the responsible party.

6.4.1.1.1.1.2 A description of the responsible party's experience, training and education in the wastewater treatment and disposal industry, together with any supporting data regarding the responsible party's qualifications in the industry.

6.4.1.1.1.1.3 Proof of the responsible party's financial solvency by providing a business financial statement (including balance sheet) that is not more than six (6) months old, and a statement of financial encumbrances.

6.4.1.1.1.1.4 A list of licensed wastewater treatment facility operators employed by the responsible party. The required class of operator will be determined by the Board of Certification for Licensed Wastewater Operators (refer to the Regulations for Licensing Operators of Wastewater Facilities).

6.4.1.1.1.2 Identify the terms and conditions under which the responsible party shall assume operational responsibility of the wastewater system.

6.4.1.1.1.3 Provide a detailed description of the wastewater system.

6.4.1.1.1.4 Disclose any existing encumbrances, liens or other indebtedness to the title of the wastewater system.

6.4.1.1.1.5 Provide an operating budget with a funding plan for the proper operation and maintenance of the wastewater system, including the accumulation of funds necessary to provide for repair or replacement of mechanical components of the wastewater system based on manufacturer recommendation. See Section 6.4.1.3 for funding requirements.

6.4.1.1.1.6 The operating budget shall include the establishment of an escrow account to be maintained by the responsible party and used exclusively for repair and replacement of failed or failing components of the wastewater system.

6.4.1.1.1.7 The escrow account may not be used for phasing construction or the expansion of the wastewater system to accommodate additional residential units.

6.4.1.1.1.8 The responsible party must maintain the escrow account throughout the life of the wastewater treatment, conveyance and disposal system, or any component thereof that the responsible party is responsible for managing.

6.4.1.2 An application to operate a large and/or community on-site wastewater treatment and disposal system shall include documentation demonstrating that an escrow account has been established. The value of the escrow account shall be equivalent to 25% of the cost of all mechanical equipment (e.g., pumps, flow meters, aerators, blowers, gear boxes) plus 50% of the cost of construction of the wastewater treatment's disposal system (e.g., infiltration beds, trenches).

6.4.1.3 Funds shall be deposited into the escrow account as dwelling units are connected to the wastewater system. The amount of funds deposited shall be equivalent to the percentage of units connected to the wastewater system (e.g., at 25% of build-out, the funds accumulated in the escrow account shall equal 25% of the amount established in 6.4.1.2).

6.4.1.4 The responsible party of the wastewater system shall notify the Department, in writing, of intent to access funds from the escrow account. The escrow funds may not be used without prior written approval of the Department. When escrow funds are used for the repair and/or replacement of mechanical equipment, the responsible party must submit a plan for the reestablishment of the escrow fund balance through the use of user fees or other sources.

6.4.1.5 The escrow account established for a community or a development can only be used for the community or development for which it was established. Accounts for non-contiguous communities or developments may not be co-mingled.

6.4.1.6 If the wastewater system for which the escrow account was established is abandoned, and the development connects to a regional or municipal wastewater treatment facility, the escrow account may be reduced to cover 25% of the replacement cost of all mechanical equipment associated with the transmission and conveyance sewer lines. If the transmission and conveyance sewer lines are all gravity lines, with no lift stations, pumps, or other mechanical equipment, the escrow account may be terminated and the funds returned to the wastewater system owner.

6.4.1.7 The escrow account must be approved by the Department and fully executed before an operation permit will be issued by the Department.

6.4.1.8 The Department shall have the right to inspect and review the financial records of the owner of the wastewater system, to include the operating budget, escrow account, and financial statements. The responsible party shall provide to the Department an annual financial report. The annual financial report shall include the following:

6.4.1.8.1 The number of homes or equivalent dwelling units connected to the facility during the calendar year.

6.4.1.8.2 The total amount of funds in the escrow account on the last day of the calendar year.

6.4.1.8.3 The amount of money withdrawn from the escrow account during the calendar year.

6.4.1.8.4 The amount of money returned to the escrow account during the calendar year.

6.4.1.8.5 The surplus or deficit of funds in the escrow account on the last day of the calendar year.

6.4.1.9 An application for a permit to construct a large and/or community on-site wastewater treatment and disposal system shall include an executed performance bond, irrevocable letter of credit, or other security, as approved by the Department. The performance bond shall be made payable to the Department and the obligation of the performance bond shall be conditioned upon the fulfillment of all requirements related to the construction permit. Terms of the performance bond shall be:

6.4.1.9.1 The amount shall be equivalent to 100% of the construction cost of the wastewater system (excluding the conveyance system and its appurtenances).

6.4.1.9.2 A performance bond is not required for any local, municipal, county, state, federal government agency, political subdivisions of the state or public wastewater utilities having more than $1,000,000.00 in annual revenue, provided the utility is duly incorporated within the State of Delaware, and is in compliance with Section 6.4.2.

6.4.1.9.3 The Department shall be made the beneficiary of the security and obligations thereof shall be conditioned upon the fulfillment of all requirements of the construction permit. The Department shall release the security only after the wastewater system has been constructed in accordance with approved plans, the operation permit has been issued by the Department and the system is performing in accordance with the conditions established in the operation permit, provided all other requirements are met.

6.4.1.9.4 The performance bond shall be executed by the responsible party through a corporate surety licensed to do business in the State of Delaware. In lieu of a performance bond, the responsible party may elect to provide an original irrevocable letter of credit equal to the required sum of the performance bond.

6.4.1.9.5 The obligation of the responsible party under the performance bond shall become due and payable for the purposes of properly fulfilling the requirements of the construction permit when the Department has:

6.4.1.9.5.1 Notified the responsible party that the conditions of the permit have not been fulfilled and specified the specific deficiencies in the fulfillment of the permit conditions;

6.4.1.9.5.2 Given the responsible party an opportunity to correct the deficiencies and to fulfill all the conditions of the permit; and

6.4.1.9.5.3 Determined that, at the end of a specified length of time, some or all of the deficiencies specified under Section 6.4.1.9.5.1 remain uncorrected.

6.4.1.9.6 Upon formal transfer of ownership of a large wastewater system to an entity identified in Section 6.4.1.1.1.1, the performance bond requirement shall cease provided all other requirements are met.

6.4.1.10 The construction permit application shall also include the following documents for legal review by the Department;

6.4.1.10.1 A Purchase and Sale Agreement -- which specifies that the purchaser or a dwelling unit has an encumbrance on the title for wastewater treatment and disposal system operation fees, easements, and other assessments related to the community system.

6.4.1.10.2 An Acknowledgment of Buyer -- which is appended to the Purchase and Sale Agreement and signed by the buyer after being furnished copies of appropriate agreements, covenants, restrictions, Articles of Incorporation and Bylaws of the Owner's Association, and indicates understanding that the buyer is obligated to pay assessments for maintaining the community system.

6.4.1.10.3 The Articles of Incorporation -- which establishes the owner's association as a state chartered, nonprofit corporation and gives the owners' association specific authority to operate, maintain, and repair the large system; to collect fees and special assessments; and to enforce any covenants, restrictions, or agreements.

6.4.1.10.4 The Bylaws of the Owners' Association -- which govern the operation of the owners' association and specifically authorizes the Board of Directors to supervise the operation and maintenance of the large system, collect fees and special assessments, and to take appropriate action when the public health is imperiled by the malfunctioning of the community system.

6.4.1.10.5 A Declaration of Covenants, Restrictions, and Easements -- which establishes, among many other limitations, the easements for the on-site sewage collection, treatment, and disposal system, and specifies responsibilities of the developers, their successors or assigns, and any owners' association regarding the community system. It further sets the fees and assessments for operation and maintenance of the large system.

6.4.1.11 For developments that do not contain homeowner’s associations, the above list of documents may be modified, at the Department’s discretion, to include only those documents that are applicable.

6.4.1.12 All large or community systems that are owned solely by one owner, partnership or corporation, who own the property that the system will be installed upon and the area to be serviced by the system must execute a Declaration of Covenants and Restrictions (DCR). The DCR must be notarized and recorded at the County's Office of the Recorder of Deeds after it has been approved by the Department. The recorded copy shall then be returned to the Department. Large or community systems meeting this requirement shall be exempt from Sections 6.4.1.1 through 6.4.1.10.

6.4.1.13 Once the Department has verified that the wastewater system has been constructed in accordance with approved plans, the owner may apply for a permit to operate the system.

6.4.1.14 Responsibility for operation and maintenance of a large or community system shall be vested in a governmental unit or a Council on behalf of the unit property owners pursuant to 25 **Del.C**. Ch. 22 or for subdivisions with an owners' association duly incorporated within the State with specific authority to operate, maintain, and repair the community system, to collect fees and special assessments and to enforce any covenants, restrictions or agreements (see Section 6.4.1.10).

6.4.2 A public wastewater utility may be exempted from the requirements of Section 6.4.1 under the following provisions:

6.4.2.1 The public wastewater utility is certified by the PSC and is in full compliance with **Del.Admin.C.**, Title 26, §6001, Regulations Concerning the Jurisdiction of the Public Service Commission to Grant and Revoke Certificates of Public Convenience and Necessity (CPCN) to Provide Wastewater Service and §6002 Regulations Governing the Minimum Standards for Service Provided by Public Wastewater Utilities Subject to the Jurisdiction of the Delaware Public Service Commission.

6.4.2.2 Public wastewater utilities having < $1,000,000.00 in annual revenue, for the utility or its parent company, must establish an escrow account and secure a construction bond.

6.4.2.3 The Utility must be duly incorporated within the State and remain in good standing.

6.4.2.4 The Utility must remain financially solvent on a continuous basis through a method of financing construction, maintenance, operation, and emergency work related to the large system to the exclusion of whatever other obligations the corporation may assume in other fields.

6.4.2.5 To the extent not already on file with the PSC, the following documents must be submitted to the Department before a Utility may be permitted to operate a large and/or community on-site wastewater treatment and disposal system:

6.4.2.5.1 Copy of the Utility's Article of Incorporation.

6.4.2.5.2 Copy of the general ledger for the two previous years and current year to date.

6.4.2.5.3 Statement of revenue and expenditures with details of revenue for service provided, capital fees, interest earnings, debt costs, income taxes and other applicable expenses.

6.4.2.5.4 Explanation of how the construction and operation of the wastewater system will be funded.

6.5 Large System Permitting

In order to obtain a permit to construct and operate an on-site wastewater treatment and disposal systems with daily flow rates of ≥ 2,500 gallons, a permit application must be

submitted to the Department for review and approval. A permit application will not be reviewed by the Department until the SIR, HSR and SWAR have been reviewed and approved by the Department.

6.5.1 Large system construction permit application requirements

All large system construction permit applications must contain the following:

6.5.1.1 DNREC application form.

6.5.1.2 Applicable DNREC fees.

6.5.1.3 Written approval from all appropriate governmental entities for the construction for the collection system.

6.5.1.4 Design Engineer Report

The Design Engineer Report is to be submitted for Department review by the owner or a designated agent. The report must include all applicable calculations and justifications for the overall design of the on-site wastewater treatment and disposal facility including pump stations and treatment processes. Once approved by the Department, the Design Engineer Report becomes the basis of design for the project. Once the facility is permitted, the facility must be constructed, operated and maintained in accordance with the Design Engineer Report. The Design Engineer Report must, at a minimum, address all of the following applicable items:

6.5.1.4.1 General information

6.5.1.4.1.1 Executive summary

6.5.1.4.1.1.1 Purpose

6.5.1.4.1.1.2 Scope

6.5.1.4.1.1.3 Design flows (peaks and average)

6.5.1.4.1.1.4 Number of equivalent dwelling units

6.5.1.4.1.1.5 Influent wastewater characteristics

6.5.1.4.1.1.6 Design effluent wastewater characteristics

6.5.1.4.1.2 Summary table of design parameters

6.5.1.4.1.3 Facility name

6.5.1.4.1.3.1 Brief description of proposed activity

6.5.1.4.1.3.2 Facility location

6.5.1.4.1.3.2.1 Area by cross roads

6.5.1.4.1.3.2.2 All applicable tax map parcels

6.5.1.4.1.3.2.3 The 12 digit Hydrologic Unit Code (HUC) Watershed(s) name(s)

6.5.1.4.1.3.2.4 County

6.5.1.4.1.3.2.5 Location map

6.5.1.4.1.3.3 Developer/owner

6.5.1.4.1.3.3.1 Name

6.5.1.4.1.3.3.2 Mailing and email addresses

6.5.1.4.1.3.4 Utility/operator

6.5.1.4.1.3.4.1 Plan of long term ownership and operation

6.5.1.4.1.3.5 Certificate of Public Conveyance and Necessity (CPCN). When applicable, a CPCN must be fully executed with the Public Service Commission before the Department will issue a permit to operate a large on-site wastewater treatment and disposal system.

6.5.1.4.1.3.6 Conditional use approval

6.5.1.4.1.3.7 Lease agreement(s)

6.5.1.4.1.3.8 Easement agreement(s)

6.5.1.4.1.3.9 Legal documents (see Section 6.4 for additional legal requirements)

6.5.1.4.1.4 Site Map

6.5.1.4.1.4.1 Provide scaled drawings with one (1) foot contour elevations, excluding spray irrigation fields, showing:

6.5.1.4.1.4.1.1 Layout of service area (development, strip mall, etc.)

6.5.1.4.1.4.1.2 Wastewater treatment facility, including:

6.5.1.4.1.4.1.2.1 Lift stations

6.5.1.4.1.4.1.2.2 Storage structures

6.5.1.4.1.4.1.3 Disposal site(s) and spare disposal site area(s)

6.5.1.4.1.4.1.4 Irrigation fields including acreage of each pivot or zone with two (2) foot contour elevations

6.5.1.4.1.4.1.5 Access roads and utilities

6.5.1.4.1.4.1.6 Location of all monitoring and observation wells (existing and proposed)

6.5.1.4.1.4.1.7 Buffers to property lines, watercourses and wetlands

6.5.1.4.1.4.1.8 Location of any storm water control structures

6.5.1.4.1.4.1.9 Drainage structures

6.5.1.4.1.4.1.10 FEMA 100 year floodplain line

6.5.1.4.1.4.1.11 Location of any wetlands, refer to the 2007 Statewide Wetlands Mapping Project (SWMP) map, and State Tidal Wetlands maps, if applicable

6.5.1.4.1.4.1.12 Watercourses within or contiguous to the site

6.5.1.4.1.4.1.13 Residences and habitable structures within or contiguous to the site

6.5.1.4.1.5 Design wastewater characteristics

Design wastewater characteristics for new facilities must be in accordance with current industry averages. Expansions and phase upgrades must utilize actual parameter concentrations from monitoring results.

6.5.1.4.1.5.1 Influent to treatment facility

6.5.1.4.1.5.1.1 Average and peak daily flow

6.5.1.4.1.5.1.2 BOD_5

6.5.1.4.1.5.1.3 Total suspended solids (TSS)

6.5.1.4.1.5.1.4 Ammonia nitrogen

6.5.1.4.1.5.1.5 Nitrate + Nitrite nitrogen

6.5.1.4.1.5.1.6 Total nitrogen

6.5.1.4.1.5.1.7 Total phosphorus

6.5.1.4.1.5.1.8 Sodium

6.5.1.4.1.5.1.9 Chlorides

6.5.1.4.1.5.1.10 pH

6.5.1.4.1.5.1.11 Additional parameters may be warranted for industrial facilities based on materials processed and Material Safety Data Sheets

6.5.1.4.1.5.2 Effluent to disposal system

6.5.1.4.1.5.2.1 Average and peak daily flow

6.5.1.4.1.5.2.2 BOD_5

6.5.1.4.1.5.2.3 TSS
6.5.1.4.1.5.2.4 Nitrate + Nitrite nitrogen
6.5.1.4.1.5.2.5 Ammonia nitrogen
6.5.1.4.1.5.2.6 Total nitrogen
6.5.1.4.1.5.2.7 Total phosphorus
6.5.1.4.1.5.2.8 Chlorides
6.5.1.4.1.5.2.9 Sodium
6.5.1.4.1.5.2.10 Sodium adsorption ratio, if applicable
6.5.1.4.1.5.2.11 Metals (Copper, Cadmium, Nickel, Lead, Zinc)
6.5.1.4.1.5.2.12 pH
6.5.1.4.1.5.2.13 Fecal coliform

6.5.1.4.1.6 Wastewater treatment facility process design
6.5.1.4.1.6.1 Overview
6.5.1.4.1.6.2 Process description
6.5.1.4.1.6.3 Process flow diagram
6.5.1.4.1.6.4 Hydraulic profile
6.5.1.4.1.6.5 Level of treatment
6.5.1.4.1.6.6 Schematic of pump stations and unit processes
6.5.1.4.1.6.7 Basin/tank volumes
6.5.1.4.1.6.8 Storage capacities
6.5.1.4.1.6.9 Capacity of pumps, blowers and other mechanical equipment
6.5.1.4.1.6.10 Determination of required storage volume
6.5.1.4.1.6.11 Chemical addition
6.5.1.4.1.6.12 Grit removal and/or screening process
6.5.1.4.1.6.13 Sludge production and disposal process
6.5.1.4.1.6.14 Influent and effluent flow metering and recordation
6.5.1.4.1.6.15 Overview of mechanical control and alarm system(s)
6.5.1.4.1.6.16 Calculations
6.5.1.4.1.6.16.1 Process design calculations and equations
6.5.1.4.1.6.16.2 Wastewater disposal system sizing
6.5.1.4.1.6.16.3 Dosing
6.5.1.4.1.6.16.4 Sludge production
6.5.1.4.1.6.16.5 Lift station(s)
6.5.1.4.1.6.16.6 Provide all assumptions used and supporting data

6.5.1.4.1.7 Effluent disposal system
6.5.1.4.1.7.1 Disposal system type
6.5.1.4.1.7.2 Effluent conveyance and distribution
6.5.1.4.1.7.3 Flow metering and recordation
6.5.1.4.1.7.4 Disinfection
6.5.1.4.1.7.5 Loading rates
6.5.1.4.1.7.6 Spray specific
6.5.1.4.1.7.6.1 Water balance/determination of design wastewater loading(s)
6.5.1.4.1.7.6.2 Phosphorus and other constituent metals loading rates
6.5.1.4.1.7.6.3 Determination of land limiting constituent (LLC) and site life based on LLC

6.5.1.4.1.7.6.4 Determination of required wetted field area(s)
6.5.1.4.1.7.6.5 Actual design wetted field area(s)
6.5.1.4.1.7.6.6 Determination of required storage volume
6.5.1.4.1.7.6.7 Actual design storage volume
6.5.1.4.1.7.6.8 Five (5) year vegetative management plan to include:
6.5.1.4.1.7.6.8.1 Crop type(s)
6.5.1.4.1.7.6.8.2 Crop planting sequence
6.5.1.4.1.7.6.8.3 Anticipated crop yield based on field data
6.5.1.4.1.7.6.8.4 Timing and application rates of commercial fertilizers (See Section 6.3.2.3.13.24), if applicable
6.5.1.4.1.7.6.8.5 Planting and harvesting timelines
6.5.1.4.1.7.6.8.6 Nitrogen balance calculation sheet
6.5.1.4.1.7.6.8.7 Selection of cover crop and management scheme(s)
6.5.1.4.1.7.6.8.8 Phosphorus balance calculations for phosphorus limited sites
6.5.1.4.1.7.6.9 Construction application requirements
6.5.1.4.1.7.6.9.1 After performing individual calculations to determine the design parameters, create and submit an active spreadsheet that incorporates all required calculated design parameters, and demonstrates their mathematical influence on each other per field and per month. The spreadsheet should iterate the design parameters, including, but not limited to, the Design Treatment Capacity, Design Disposal Capacity, Daily Average Flow, Total Spray Acreage, Maximum Allowed Infiltration Rate, Irrigation Rate, Total Storage Volume, etc. Include nitrogen balance calculations taking into consideration the Average Design Wastewater Loading, Nitrogen Concentration in Effluent, Average Annual Precipitation and Fixation, Application of all Fertilizers, Proposed Cover Crop and Cover Crop Management Scheme, Crop Nitrogen Uptake Rates.
6.5.1.4.1.7.6.9.2 Ensure the spreadsheet includes monthly storage pond volume calculations and required storage calculations. Ensure that the calculations demonstrate the ability to evacuate the maximum accumulated storage within a 90 day period and include the following considerations on a monthly basis: Average Precipitation, Volume Added to Pond from Precipitation, Evaporation, Volume lost due to Evaporation, Net Change in Pond Volume, Treated Effluent Volume to Pond, Potential Application from Pond to Spray Fields, Change in Volume, Required Accumulated Storage.
6.5.1.4.1.8 Monitoring of effluent, groundwater and surface waters
6.5.1.4.1.8.1 Site map depicting proposed locations of monitoring points, wells and lysimeters
6.5.1.4.1.9 Project phasing (see Section 6.5.11)
6.5.1.5 Plans
The plans must include, at a minimum, the following applicable items:

6.5.1.5.1 Site Plan:

6.5.1.5.1.1 Layout of collection system(s), including lift station and force mains.

6.5.1.5.2 General layout of the wastewater treatment facility including:

6.5.1.5.2.1 Topography of the wastewater treatment facility site with one (1) foot contours unless the Department approved the use of an alternate scale. Topography for spray irrigation fields may utilize two (2) foot contour intervals.

6.5.1.5.2.2 Size and location of all proposed wastewater treatment plant structure(s).

6.5.1.5.2.3 Process flow diagram showing the flow through all treatment units.

6.5.1.5.2.4 Piping and appurtenances (including arrangements for bypassing individual units).

6.5.1.5.2.5 Materials handled and direction of flow through pipes must be shown.

6.5.1.5.2.6 Hydraulic profiles showing the flow of wastewater, supernatant liquor, and biosolids.

6.5.1.5.2.7 Influent and effluent flow meters locations.

6.5.1.5.2.8 Monitoring location point(s).

6.5.1.5.2.9 Location, dimensions and elevations of all existing and proposed facility components.

6.5.1.5.2.10 Type, size, pertinent features and manufacture's rated capacity of all pumps, blowers, motors, and other mechanical devices, unless included in the specifications.

6.5.1.5.3 General layout of wastewater disposal area, including:

6.5.1.5.3.1 Topography of the wastewater disposal site with one (1) foot contours unless the Department approves the use of an alternate scale. Topography for spray irrigation fields may utilize two (2) foot contour intervals.

6.5.1.5.3.2 Proposed disposal system elevations.

6.5.1.5.3.3 Disposal system location, size and layout.

6.5.1.5.3.4 Spare disposal system location, size, layout and dimensions.

6.5.1.5.3.5 Piping inverts to disposal system.

6.5.1.5.3.6 Monitoring and observation well locations as approved by the Department.

6.5.1.5.3.7 Overlay of disposal area with approved soil delineation area.

6.5.1.5.3.8 Buffer areas.

6.5.1.5.3.9 Provide disposal system layout (identify laterals, transmission line, manifolds, valving, vaults, splash blocks, runs, laterals, air release valves, remote zoning, etc.).

6.5.1.5.3.10 Cross section of disposal system(s).

6.5.1.5.3.11 Cut/fill sections, if applicable.

6.5.1.5.3.12 Piping details to system including inverts.

6.5.1.5.3.13 Valving details of disposal system.

6.5.1.5.3.14 Splash block details for rapid infiltration basin(s).

6.5.1.5.3.15 Berm details applicable to the disposal system.

6.5.1.5.3.16 Fence details.

6.5.1.5.3.17 Sign details.

6.5.1.5.3.18 Silt fence details.

6.5.1.5.4 Sequence of Construction

6.5.1.6 Technical Specifications

6.5.1.6.1 The specifications accompanying the plans shall include, but not be limited to, the following:

6.5.1.6.1.1 Detail of the design requirements pertaining to:

6.5.1.6.1.1.1 The quality of materials and workmanship.

6.5.1.6.1.1.2 Fabrication of the project.

6.5.1.6.1.1.3 The type, size strength, operating characteristics, and ratings of equipment.

6.5.1.6.1.2 Equipment list – provide all equipment specifications to include cut sheets, model numbers, pump curves, system curves, capacities, etc.

6.5.1.6.1.3 Complete specifications for all mechanical equipment, including machinery, valves, piping and pipe joints.

6.5.1.6.1.4 Meters, laboratory fixtures and equipment.

6.5.1.6.1.5 Operating tools.

6.5.1.6.1.6 Construction materials.

6.5.1.6.1.7 Miscellaneous appurtenances.

6.5.1.6.1.8 Chemicals used.

6.5.1.6.1.9 Instruction for testing materials and equipment, as necessary, to meet design standards.

6.5.1.6.1.10 Operating tests for the completed facilities.

6.5.2 Large System Construction Permit

6.5.2.1 Public Advertisement

6.5.2.1.1 Upon approval of the completed application for a construction permit or construction permit renewal, the Department will advertise receipt of the application and conduct any hearings in accordance with 7 **Del.C.**, Ch. 60. The cost of the advertisement is to be borne by the applicant. If a public hearing is not conducted, and all requirements of these regulations have been fulfilled, a construction permit shall be issued by the Department.

6.5.2.2 Construction Permit Expiration

6.5.2.2.1 All construction permits for large on-site wastewater treatment and disposal systems pursuant to these Regulations may be issued for no more than five (5) years.

6.5.2.2.2 If construction has not been initiated prior to the expiration of the construction permit, and there are proposed changes to the approved design, the applicant must submit a new or updated Design Engineer Report and construction plans as outlined in Sections 6.2.3, 6.5.1.4 and 6.5.1.5 for project re-evaluation. This will require public notification.

6.5.2.2.3 If construction has been initiated prior to the expiration of the construction permit, and construction has not been completed prior to the expiration of the permit, the permittee may apply for a one (1) year extension of the construction permit.

6.5.2.2.4 If construction has not been initiated or construction has not been completed prior to the expiration of the one (1) year extension, provided, the SIR is valid, and there are no changes to the approved design prior to the expiration of the construction permit, the applicant must submit a construction permit application

along with applicable fees, and a construction schedule.

6.5.2.3 Construction Permit Extension

6.5.2.3.1 The application for extension must include the following:

6.5.2.3.1.1 A DNREC extension form.

6.5.2.3.1.2 Applicable Department fees.

6.5.2.3.1.3 Construction schedule.

6.5.3 Large System Operation Permit

Upon completion of construction, an operation permit must be obtained from the Department prior to system operation. A classification shall be performed on the facility in accordance with Regulations Licensing Operators of Wastewater Facilities. The class of operator required for the facility will be determined by the Board of Certification for Licensed Wastewater Operators in accordance with the Regulations Licensing Operators of Wastewater Facilities. All large systems must be under the direction of a licensed operator. The licensed operator must be available at all times. The licensed operator shall be on-site at the time the system is put into operation and is to receive all training as necessary to properly operate the system.

6.5.3.1 Application requirements for an operation permit

Prior to the issuance of an operation permit, the following applicable items must be submitted. Failure to submit all required information constitutes grounds for denial of the operation permit.

6.5.3.1.1 A DNREC application form.

6.5.3.1.2 Applicable Department fees.

6.5.3.1.3 Design Engineer Inspection Report(s) certifying the facility has been constructed in accordance with approved plans and specifications.

6.5.3.1.4 Copies of any other applicable State/County inspection reports.

6.5.3.1.5 Contractor's Certificate of Completion.

6.5.3.1.6 A certificate or letter of completion/approval from the wastewater treatment plant manufacturer.

6.5.3.1.7 A copy of the agreement with a licensed operator and license certification.

6.5.3.1.8 A copy of the agreement with a regulated wastewater utility in the State of Delaware that the treatment facility will be operated under.

6.5.3.1.9 A set of "as-built" drawings of the facility bearing the seal and signature of a licensed Professional Engineer registered in the State of Delaware.

The "as-built" drawings must include:

6.5.3.1.9.1 Site map showing the location of all structures, piping and appurtenances, disposal areas and buffers.

6.5.3.1.9.2 A full equipment list and technical specifications for all equipment used, if different than submitted in the permit application.

6.5.3.1.9.3 The new topography elevations of the system.

6.5.3.1.9.4 Monitoring/Observation well elevations at the top of the casing (TOC) and at the ground surface, GPS coordinates (State Plane), and local topography tied to a common benchmark.

6.5.3.1.9.5 The location and screen depth, length of stick up, and well ID's must be provided for each monitor well.

6.5.3.1.9.6 Elevations at the center and corners of each RIB.

6.5.3.1.10 A copy of all Collection System Permit(s)

6.5.3.1.11 Inspection Reports demonstrating collection system has been installed and inspected by Design Engineer

6.5.3.1.12 If the collection system does not require county approval, the permittee must supply the Department with all testing procedures conducted on the collection system, force main(s) and lift station(s).

6.5.3.1.13 An Operation and Maintenance (O&M) Plan in accordance with Section 6.7

6.5.3.1.14 Spreadsheet summary of groundwater monitoring well information.

6.5.3.1.14.1 GPS information detailing the northings and eastings; the local well ID number; and the DNREC Well ID/Well Permit Number. The GPS information must be in either Delaware State Plane, North American Datum 1983 meters; or Latitude and Longitude decimal degrees.

6.5.3.1.14.2 TOC elevations survey results for all monitoring wells to be utilized for groundwater monitoring. Provide the length of the well stickup and the well survey information to the closest 0.01 feet. Provide a permanent mark, etch, or fixture to be used to specify the survey point where the TOC elevations were read.

6.5.3.1.15 A summary report detailing the analyses of the background groundwater quality sampling program that was conducted consisting of at least three (3) samples one (1) month apart and analyzed prior to the initiation of disposal activities (see Section 6.6.3.16).

6.5.3.1.16 Biosolids Management Plan

6.5.3.1.16.1 A copy of a biosolids management contract if a third party will be utilized to manage the biosolids.

6.5.3.1.17 Legal documents (see Section 6.4)

6.5.3.2 Operation Requirements

6.5.3.2.1 On-site systems and spray irrigation facilities (additional spray requirements in Section 6.5.3.2.2)

6.5.3.2.1.1 Samples and measurements taken as required in the operation permit shall be representative of the volume and nature of the monitored discharge. If there has been significant increase (> 25%) in the characterization of any one parameter of the effluent wastewater as established in the Design Engineer Report, the permittee shall resample the wastewater and submit the additional analyses to the Department. The permittee shall re-characterize the wastewater to determine if a change in treatment is required and/or if the land limiting constituent has changed. If a change in treatment is required and/or if the land limiting constituent has changed, a revised Design Engineer Report shall be submitted to the Department.

6.5.3.2.1.2 Roof downspouts, foundation drains, area drains, storm sewers, combined sewers or appurtenances thereto or any sewer or device carrying storm water shall not be connected to the system.

6.5.3.2.1.3 The wastewater must be applied in a manner such that the application is even and uniform over the disposal area.

6.5.3.2.1.4 The groundwater mound created by the added infiltration shall at no time reach within two (2) feet of the ground surface in any section of the disposal area. Should the groundwater mound exceed this limit, the permittee

shall cease all distribution of wastewater to the affected area until the groundwater mound recedes to acceptable levels.

6.5.3.2.1.5 Connections or additions to the system other than those indicated on the approved plans are prohibited without prior approval from the Department.

6.5.3.2.1.6 In the event that the permittee installs new monitoring wells or replaces any existing monitoring wells, the permittee shall submit to the Department new elevation details relative to the common benchmark previously established. Additionally, the permittee shall conduct a groundwater quality sampling program prior to initiation of wastewater disposal activities on the area incorporating the well. The sampling program shall be sufficient to establish representative ground water quality at each well prior to initiation of the wastewater disposal activities. A minimum of three (3) samples shall be collected at least one (1) month apart and analyzed. A summary report detailing all analyses shall be submitted to the Department prior to initiation of wastewater disposal activities. Analyses shall include the parameters iterated in Section 6.8.1.

6.5.3.2.2 Spray Irrigation Facilities

6.5.3.2.2.1 The discharge to the spray irrigation fields shall be free from material such as floating solids, sludge deposits, debris, scum, oil and grease.

6.5.3.2.2.2 The spray irrigation fields shall be managed to assure at a minimum that:

6.5.3.2.2.2.1 Spray irrigation of wastewater shall only occur on fields being prepared for planting or already planted with a crop and shall not occur on fields with crops not actively growing or on voluntary vegetation.

6.5.3.2.2.2.2 The spray fields shall be maintained in such a manner as to prevent wastewater pooling and/or discharge of wastewater to any surface waters. Should pooled areas become evident, spraying on those areas shall be prohibited until saturated conditions no longer exist.

6.5.3.2.2.2.3 Aerosols or nuisance odors shall not extend beyond the boundary of the spray irrigation site when treated wastewater is being applied. If odors are produced that are considered to be a public nuisance, the permittee shall take the necessary steps to eliminate such odors. All action taken shall be reported to the Department.

6.5.3.2.2.2.4 Erosion controls must be employed to prevent wastewater runoff from the spray irrigation fields. The permittee must notify the Department immediately if any wastewater runoff occurs.

6.5.3.2.2.2.5 The spray irrigation field's crops must be maintained in optimal condition, including any necessary weed management, reseeding, or other vegetative management practices.

6.5.3.2.2.2.6 Effective vegetative management shall be provided such that crops harvested on the spray irrigation sites are removed from the sites.

6.5.3.2.2.2.7 Spray irrigation is prohibited when saturated or frozen soil conditions exist.

6.5.3.2.2.2.8 The permittee shall take appropriate measures to protect the spray irrigation system from damage due to sub-freezing conditions.

6.5.3.2.2.2.9 Any leaks shall be reported to the Department and repaired immediately.

6.5.3.2.2.2.10 Potable ground or surface water may be used for distribution system testing and irrigation to establish vegetation when sufficient treated effluent is not available.

6.5.3.2.2.2.11 Permittee must notify the Department in writing prior to utilizing the freeboard in any lagoon or immediately upon unexpected encroachment into freeboard. In the event of encroachment into freeboard, Permittee shall contact the Department to coordinate relief measures. In the event of an emergency, Permittee may contact the Department via telephone; however, written notification must subsequently be provided within 5 days of encroachment.

6.5.3.2.2.2.12 If the surface horizon soil phosphorus levels become excessive as defined by the University of Delaware soil testing methods, the permittee shall perform a Phosphorus Site Index (PSI) study of the site. Based on the results of the PSI study, the Department may require the permittee to submit a plan for Department review and approval detailing steps the permittee will take to reduce the phosphorus loading rates at the site to crop phosphorus uptake levels.

6.5.3.2.3 Operation Permit Conditions

Conditions necessary for the protection of the environment and the public health may differ from facility to facility because of varying environmental conditions and wastewater compositions. The Department may establish specific permit conditions. Specific conditions may be established in consideration of characteristics specific to a facility and inherent hazards of those characteristics. Such characteristics may include, but are not limited to:

6.5.3.2.3.1 Chemical, biological, physical, and volumetric characteristics of the wastewater.

6.5.3.2.3.2 Geological and climatic nature of the facility site.

6.5.3.2.3.3 Size of the site and its proximity to population centers, ground and surface water.

6.5.3.2.3.4 Legal considerations relative to land use and water rights.

6.5.3.2.3.5 Techniques used in wastewater distribution and the disposition of that vegetation exposed to wastewaters.

6.5.3.2.3.6 Abilities of the soils and vegetative covers to treat the wastewater without undue hazard to the environment or to the public health.

6.5.3.2.3.7 Potential for adverse environmental impacts to groundwater resources or surface water bodies.

6.5.3.2.3.8 The need for monitoring and recordkeeping to determine if the facility is being operated in conformance with its design and if its design is adequate to protect the environment and the public health.

6.5.3.2.3.9 The Department may impose, in any permit for large or community systems, standards for evaluating the treatment and disposal system performance and compliance with these regulations. These standards may be in the form of limitations on flow and pollutant concentrations and mass loadings, or testing basins at design loading rates. The standards shall reflect the utilization of best management and operational practices.

6.5.3.3 Permit Modifications/Amendments

6.5.3.3.1 In consultation with the permittee, the Department may modify or amend an existing permit provided that the modifications would not result in an increased impact or risk to the environment or to public health.

6.5.4 Operation Permit Re-Issuance

At least 180 days prior to the expiration date of the operation permit, the permittee must submit an application for renewal or notify the Department of the intent to cease discharging by the expiration date. The application package for systems with a design flow ≥ 100,000 gpd, must include a five (5) year Compliance Monitoring Report (CMR). In the event that a timely and complete application has been submitted as determined by the Department, and the Department is unable, through no fault of the permittee, to issue a new permit before the expiration date of this permit, the terms and conditions of this permit are automatically continued and remain fully effective and enforceable until a decision is made on the new application.

6.5.4.1 At a minimum, the following applicable items must be addressed. Individual permits may require additional specific items that must be submitted in the permit renewal application package.

6.5.4.2 Permit renewal application package;

6.5.4.2.1 DNREC application form

6.5.4.2.2 Applicable DNREC fees

6.5.4.2.3 Request for permit modifications

6.5.4.2.4 Revised O&M plan, if changes, including but not limited to operational or facility upgrades.

6.5.4.3 CMR Requirements

6.5.4.3.1 Soils Report

6.5.4.3.1.1 Soil reports must be signed and sealed by a Class D.3 soil scientist and contain the following:

6.5.4.3.1.1.1 One (1) soil boring/acre must be performed in the spare area. Soil profile descriptions must be logged on a soil profile note page(s).

6.5.4.3.1.1.2 List new wells, storm water ponds, filling/cutting or activity that will potentially impact the current and/or future operation of the drainfield(s) and spare area(s) on a site map.

6.5.4.3.1.1.3 Identify any areas prone to ponding, saturation or subsurface breakouts, reduction in design infiltration rates and proposed remedial activities necessary to return the site to permit compliance, if applicable.

6.5.4.3.1.1.4 Soils investigation is not required in the active disposal area.

6.5.4.3.1.1.5 Conclusions must be based on the monitoring/performance data. The conclusion and data must be summarized.

6.5.4.3.1.1.6 Recommendations for future monitoring, system upgrades or improvements, O&M, etc. must be provided.

6.5.4.3.1.1.7 Spray Irrigation Facilities

6.5.4.3.1.1.7.1 Review soil analysis lab results for the life of the permitted land application activities and report any trends which may be developing.

6.5.4.3.1.1.7.2 Review the design land limiting constituents and the approximate site life calculated at the time of design. Review the

current levels of potential land limiting constituents (e.g., hydraulic loading, phosphorus, cadmium, copper, lead, nickel, zinc). Based on trends of the monitored parameters, determine the current land limiting constituent and estimate remaining site life.

6.5.4.3.1.1.7.3 Review pH levels, liming activities, additional fertilizer applications, and cropping uptakes as they relate to permit conditions and report any concerns.

6.5.4.3.1.1.7.4 Determine if current cropping sequences/rotations are appropriate. Recommend any necessary changes.

6.5.4.3.1.1.7.5 Spray irrigation fields must be assessed to determine if soils renovation or maintenance is necessary. Assessments must address crop consistency, soil monitoring results, infiltration, and compaction. The assessment must identify any visual signs of the ponding of wastewater, runoff, poor or dead vegetation, compaction, and any other impacts affecting the facility grounds. The assessment must also indicate whether the disposal application areas show signs of stress or failure.

6.5.4.3.2 Hydrogeologic Suitability Report

6.5.4.3.2.1 Hydrogeological reports must be signed and sealed by a Delaware-licensed professional geologist (PG) and must, at a minimum, include the following:

6.5.4.3.2.1.1 The current number of units connected to the system must be reported. Also report the number of units connected for each year of the five (5) year reporting period and location of units.

6.5.4.3.2.1.2 A map of the current monitoring/observation well network must be provided. Any changes to the well network (e.g., replacement, abandonment) must be documented.

6.5.4.3.2.1.3 The following well data must also be tabulated: permit number, local identifier, easting, northing, diameter, screen interval, top of casing (TOC) elevation and land-surface elevation. The casing (inner or outer) from which the water-level measurement will be taken should be specified.

6.5.4.3.2.1.4 Metered flow demonstrating volumes versus time must be plotted for average monthly influent, average monthly effluent, and daily peak influent flows. Trends identified in the data should be discussed.

6.5.4.3.2.1.5 Water-table hydrographs must be provided to demonstrate that the required unsaturated zone thickness is maintained beneath the wastewater system (see Exhibit W). The hydrographs must show hydraulic head (in ft above mean sea level (msl)) versus time. Hydraulic head data must be evaluated with respect to the disposal surface.

6.5.4.3.2.1.6 Precipitation data for the reporting period must be plotted based on nearby meteorological stations or on-site observations. Compare peak flows to precipitation data to detect any inflow and infiltration into the collection system.

6.5.4.3.2.1.7 Maps showing the configuration of the water table and groundwater flow direction must be presented for (i) peak, (ii) average, and (iii) minimum water-table conditions for the reporting period.

6.5.4.3.2.1.8 The peak observed (or interpolated) mound beneath each system or basin must be reported as a percentage of the simulated (or predicted) mound. Example: the simulated pre-system operation water table was 50 feet msl and the simulated post-system or basin mound was 55 feet msl. An observed mound of 52 feet msl would constitute 40% of the simulated mound. This percentage must be compared to metered flows (reported as a percentage of peak flow). The PG may consider re-running the model to verify mounding using the observed flow.

6.5.4.3.2.1.9 Temporal trends in both effluent and groundwater quality must be evaluated and compared to background samples and/or previous sampling results. Tabulated influent, effluent, and monitoring well data must be provided. Data must also be plotted verses time to depict trend lines. Where applicable, groundwater data must be evaluated with respect to drinking water standards established by the U.S. EPA.

6.5.4.3.2.1.10 Some site specific criteria will be necessary for specialized conditions, needs, and/or circumstances (e.g., regional systems, phased approaches).

6.5.4.3.2.1.11 The PG must provide a conclusion of the operating status of the disposal system based on the monitoring/performance data. Recommendations for future monitoring, system upgrades or improvements, operation and maintenance (O&M) should be provided as necessary.

6.5.4.3.3 Engineering/Operation Report

6.5.4.3.3.1 The Engineering/Operation Report must be signed and sealed by a Delaware licensed Professional Engineer and must, at a minimum, include the following:

6.5.4.3.3.1.1 Operation & maintenance concerns and/or changes, if any, must be summarized. Items to address may include, but need not be limited to, the following: infiltration problems, equipment replacement, system and/or basin maintenance, treatment system problems and crop activities (e.g. harvesting, planting). Dates and descriptions of routine maintenance procedures, such as basin raking, must also be provided.

6.5.4.3.3.1.2 List, summarize, and date all compliance items relative to the permit (e.g. enforcement actions, Notice of Violations, warning letters, self-reported permit violations and effluent limitation exceedences). Indicate any outstanding non-compliance issues.

6.5.4.3.3.1.3 Provide an updated active spreadsheet as required in 6.5.1.4.1.7.6.9 utilizing existing data where possible and appropriate.

6.5.4.3.4 Vegetative Management Plan

6.5.4.3.4.1 The vegetative management plan must be executed and approved by a Nutrient Consultant, Certified Crop Advisor, or any appropriate professional authorized by the Delaware Department of Agriculture and must, at a minimum, include the following:

6.5.4.3.4.1.1 Crop type(s).

6.5.4.3.4.1.2 Crop planting sequence.

6.5.4.3.4.1.3 Anticipated crop yield based on field data.

6.5.4.3.4.1.4 Timing and application rates of commercial fertilizers.

6.5.4.3.4.1.5 Planting and harvesting timelines.

6.5.4.3.4.1.6 A recalculated monthly nitrogen balance using averaged actual irrigation rates and averaged actual nitrogen monitoring results.

6.5.4.3.4.1.7 Phosphorus balance calculations for phosphorus limited sites.

6.5.4.3.5 BioSolids Management

6.5.4.3.5.1 Permit/Contract:

6.5.4.3.5.1.1 If a third party manages the biosolids, provide a copy of the most recent biosolids management contract.

6.5.4.3.5.1.2 If the permittee manages the biosolids, provide a copy of the current DNREC – Biosolids Permit.

6.5.4.3.5.2 Provide a summary of the volume (gallons) of biosolids generated, removed and/or stored over the past five years.

6.5.4.3.6 Overall Conclusions/Recommendations

6.5.4.3.6.1 Conclusions based on the monitoring/performance data of the wastewater treatment facility and disposal system must be summarized and submitted by the engineer, consultant and/or permittee. Recommendations for future monitoring, system upgrades or improvements and O&M should be provided as necessary. Systems with compliance matters that are unresolved must include a work plan detailing the course of action proposed to return the facility to compliance. Systems with existing compliance matters that are unresolved with an existing work plan must provide a status update, a summary of actions completed, and any adjustments to the work plan's timeline or course of actions.

6.5.4.4 Emergency Repairs

6.5.4.4.1 Emergency repairs or the replacement of critical "like kind" components of the wastewater treatment facility necessary for the continued operation of the facility may be performed without first obtaining a construction permit from the Department.

6.5.4.4.2 A report must be submitted to the Department within five (5) days of completion of the emergency repairs. The report must summarize the nature of the emergency and the repairs performed. All violations must also be reported in accordance with Section 6.5.9.

6.5.5 Severability

The provisions of a permit are severable. If any provision of a permit, or the application of any provision of a permit, to any circumstances is held invalid; the application of such provision to other circumstances, and the remainder of the permit, shall not be affected thereby.

6.5.6 Permit Transferability

Permits may be transferred to a new owner or operator. The permittee must notify the Department by requesting a change of ownership of the permit before the date of transfer. The transfer must be consistent with any notarized legal documents and/or CPCN required by these Regulations. The legal documentation must be provided with the application. The application must be received 30 days before the transfer.

6.5.6.1 No person shall transfer a permit from one (1) person to another unless 30 days written notice is given to the Department, indicating the transfer is agreeable to both persons, and approval of such transfer is obtained in writing from the

Department, and any conditions of the approval of such transfer is obtained in writing from the Department, and any conditions of the transfer approved by the Department are complied with by the transferor and the transferee.

6.5.6.2 The notice to the Department shall contain a written agreement between the transferor and the transferee, indicating the specific date of proposed transfer of permit coverage and acknowledging responsibilities of current and new permittees for compliance with and liability for the terms and conditions of this permit. The notice shall be signed by both the transferor and the transferee.

6.5.7 Permit Revocation

6.5.7.1 The Department may revoke a permit if, among other things, the permittee violates any permit condition, these regulations, fails to pay applicable Departmental fees, obtains the permit by misrepresentation or fails to fully disclose all relevant facts.

6.5.7.2 Except in cases of emergency, the Department shall issue a written notice of intent to revoke to the permittee prior to final revocation. Revocation shall become final within 20 days of receipt of the notice by the permittee, unless within that time the permittee requests an administrative hearing in writing.

6.5.7.3 The Department shall notify the permittee in writing of any revocation hearing at least 20 days prior to the date set for such hearing.

6.5.7.4 If the Department finds the public health, safety or welfare requires emergency action, the Department shall incorporate findings in support of such action in a written notice of emergency revocation issued to the permittee. Emergency revocation shall be effective upon receipt by the permittee. Thereafter, if requested by the permittee in writing, the Department shall provide the permittee a revocation hearing.

6.5.8 Sunset Requirement

6.5.8.1 Operation permits for large systems that were issued without a permit expiration date shall expire five (5) years following the promulgation date of these Regulations.

6.5.9 Noncompliance Notification

6.5.9.1 The permittee shall report to the Department's Enforcement Section at (800) 662-8802 any unpermitted release or discharge of any contaminant into the air, or a pollutant, including petroleum substances, into surface waters, groundwater, or onto land as soon as the permittee has knowledge of, or should have had knowledge of, the release or discharge.

6.5.9.2 If for any reason the permittee does not comply with, or will be unable to comply with, any effluent limitations or other conditions specified in the permit, the permittee shall provide the Department with the following information in writing within five (5) days of becoming aware of any actual or potential noncompliance:

6.5.9.2.1 A description and cause of the noncompliance with any limitation or condition.

6.5.9.2.2 The period of non-compliance including exact dates and times; or, if not yet corrected, the anticipated time the noncompliance is expected to continue.

6.5.9.2.3 The steps being taken or planned to reduce, eliminate and/or prevent recurrence of the noncompliant condition.

6.5.10 Regional Facilities

6.5.10.1 Design

6.5.10.1.1 Regional wastewater treatment and disposal facilities (regional facility) must be owned and operated by a wastewater utility or governmental agency, however government agencies are exempt from the requirements of Section 6.5.10.3.

6.5.10.1.2 The regional facility must be designed to not exceed the site's most limiting disposal capacity based on the SIR, HSR and SWAR, collectively.

6.5.10.1.3 If the regional facility is constructed in phases, the number of units that will be authorized to be connected to the regional facility will be limited to the approved capacity of the wastewater treatment and disposal system for that phase.

6.5.10.1.4 The force main, pump station, and appurtenances to the off-site disposal area and/or development(s) must be permitted by the Department for construction before the off-site disposal area and/or development(s) may be included as part of the regional facility.

6.5.10.1.5 All regional facilities must monitor for all constituents identified under the ambient groundwater quality sampling chart in Section 6.2.3.5.

6.5.10.2 Required documents for permitting:

6.5.10.2.1 The applicant must submit a Regional Facility Plan to the Department for review and approval. The plan must:

6.5.10.2.1.1 Identify the proposed service area for the regional facility.

6.5.10.2.1.2 Provide documentation of the proposed conveyance system.

6.5.10.2.1.3 Demonstrate the total treatment and disposal capacity, including 100% spare area, if applicable.

6.5.10.2.1.4 Propose the total number of equivalent dwelling units (EDU's) in accordance with Section 6.3.1.5.

6.5.10.2.1.5 Identify each subdivision proposed to be connected to the regional facility by name, tax parcel number and number of EDU's.

6.5.10.2.1.6 Include the appropriate county approval documentation.

6.5.10.3 Required documents for connecting subdivisions:

6.5.10.3.1 A subdivision shall not be connected to a regional facility until all of the applicable required documents have been submitted to and approved by the Department and there is sufficient demonstrated capacity (based on the approved SIR, HSR and SWAR) to connect the subdivision to the regional facility. A subdivision phase may only be connected after being incorporated into the operating permit. In order to connect a subdivision to the regional facility, the permittee must submit the following for approval:

6.5.10.3.1.1 A Certificate of Public Convenience and Necessity (CPCN).

6.5.10.3.1.2 A zoning certificate.

6.5.10.3.1.3 A binding agreement from the developer/owner stating that they authorize connection of their subdivision to the regional facility.

6.5.10.3.1.4 A copy of the approved subdivision recordation plan. The number of units shown on the approved county subdivision recordation plan must agree with the number of units identified in the Regional Facility Plan.

6.5.10.3.1.5 A copy of the approved collection system permit number and all collection system inspection approvals (county, if required).

6.5.11 Phasing

A system may be designed in phases to allow actual flow data to be collected to determine the necessity and timing for treatment facility upgrades/additions and to accommodate initial low influent flows to the wastewater treatment plant.

6.5.11.1 Application

6.5.11.1.1 The applicant must submit an overview of the design of all phases of the facility. The applicant may apply for the permitting of each individual phase or for the permitting of multiple planned phases for the facility.

6.5.11.1.2 The applicant must identify the capacity of each phase of the project.

6.5.11.1.3 Each phase of the system must be designed to be incorporated into the final design of the system. The Design Engineer Report must demonstrate how the components of each phase will be utilized within subsequent phases.

6.5.11.1.4 The applicant shall provide information regarding managing low flow and/or organic loadings through integration of multiple treatment units.

6.6 Construction Requirements

6.6.1 Construction must be performed in accordance with these Regulations and the approved construction permit (Design Engineer Report, Plans and Technical Specifications, etc.)

6.6.2 The permittee shall notify the Department in writing of the intent to initiate construction activities at least 15 days prior to the commencement of construction. The written notification shall include a draft construction schedule.

6.6.2.1 The permittee must provide updated construction schedules if the schedule changes as construction progresses.

6.6.3 Prior to initiating construction of a large on-site wastewater treatment and disposal system, a pre-construction meeting shall be held on-site and attended by the following individuals: DNREC Soil Scientist, DNREC Environmental Engineer, DNREC Hydrologist, Class D.3 Soil Scientist, Professional Geologist, Project Design Engineer, General Site Contractor, Class E.4 System Contractor and other necessary parties.

6.6.3.1 All systems must be installed by a DNREC licensed Class E.4 system contractor. Proper construction of the treatment plant and/or spray system must be certified in writing by the design engineer and the manufacturer's representative prior to startup of the wastewater treatment plant.

6.6.3.2 The Class E.4 system contractor must notify the Department 72 hours prior to construction startup.

6.6.3.3 The Class E.4 system contractor must obtain an authorization number from the Department prior to initiating construction.

6.6.3.4 Upon receipt of the authorization number, the Class E.4 system contractor shall provide an installation timeline to the Department. Upon receipt of the timeline, the Department may request weekly status reports (verbal) or monthly progress reports (written) be submitted.

6.6.3.5 The Class E.4 system contractor must have a copy of all valid, required and approved permits on site during construction.

6.6.3.6 The design engineer or his/her designee must periodically review the construction of the disposal system to ensure compliance with design specifications.

6.6.3.7 All system components must be surveyed to a common datum point.

6.6.3.8 Soil disturbance to the disposal areas must be limited to the minimum required for installation. A protective barrier must be placed around the disposal areas, including spare area, prior to the initiation of any construction activities. The

soils may be rendered unsuitable should unnecessary soil disturbance occur near or within the disposal area. Particular care should be taken when clearing wooded lots so as not to remove the surface soil material (see Lot Clearing Guidelines).

6.6.3.9 If well pointing is required during construction, the wells must be installed by a licensed well driller, and a permit to construct such wells must first be obtained from the Department.

6.6.3.10 All construction activities must be approved by the Department and must comply with all other applicable local utility construction specifications and standards; and must be in accordance with Ten States Standards.

6.6.3.11 Connections and/or additions to the wastewater treatment and disposal system, other than those indicated on the approved plans and specifications, will not be allowed without prior written approval from the Department.

6.6.3.12 Any anticipated facility expansions, production increases, or process modifications that will result in new, different, or increased discharges of pollutants must be reported in writing to the Department for approval. A new permit may be required.

6.6.3.13 Facility and Construction Changes

The permittee must submit a written report to the Department for review and approval of any changes to the facility or construction of the system within the following time periods:

6.6.3.13.1 30 days before any planned activity, physical alteration to the permitted facility or addition to the permitted facility if that activity, alteration or addition would result in a change in information that was previously submitted to the Department; or

6.6.4.13.2 30 days before any anticipated change which would result in noncompliance with any permit condition or the regulations; or

6.6.4.13.3 Immediately after the permittee becomes aware of relevant facts omitted from, or incorrect information submitted in, a permit application or report to the Department.

6.6.3.14 The permittee must have a licensed well driller install all required monitoring wells at the locations approved by the Department. The permittee shall contact the Department at least 24 hours prior to the installation of the monitoring wells. All monitoring wells must be installed by a licensed well driller, and a permit to construct the wells must first be obtained from the Department. After installation, the permittee must have all monitoring wells globally positioned. The GPS information must be submitted to the Department with the locations of the wells delineated on a Site Map. The GPS information must be in either Delaware State Plane, North American Datum 1983 meters; or Latitude and Longitude decimal degrees.

6.6.3.15 Prior to well purging and groundwater sampling, the elevation of a reference marking on the upper terminus of each monitoring well casing shall be surveyed to the nearest 0.01 ft relative to a common mean sea level datum. The elevation of the ground surface immediately adjacent to each monitoring well shall also be surveyed as previously prescribed. All elevation data pertaining to monitoring wells shall be indicated on “as-built” plans and summarized in a report (see Section 6.5.3.1.14).

6.6.3.16 The permittee shall conduct a background groundwater quality sampling program prior to initiation of disposal activities. The sampling program shall be

sufficient to establish representative groundwater quality at each well prior to initiation of disposal activities. A minimum of three (3) samples shall be collected at least one (1) month apart and analyzed prior to the initiation of disposal activities. A summary report which includes all analyses must be submitted to the Department. Analyses may include, but not be limited to, the parameters listed in Section 6.8.1.8.

6.6.3.17 The permittee must supply the Department with testing procedures and results conducted on the force main/collection/distribution system (including any lift stations).

6.6.3.18 A construction permit issued by the Department does not relieve the permittee from complying with any local, municipal, county, or state requirement.

6.6.3.19 The Class E.4 system contractor must contact the design Engineer, licensed operator and the Department to schedule an inspection prior to completion of construction.

6.6.3.20 The system may not be placed into operation until an operation permit has been issued by the Department.

6.6.3.21 Upon final approval of construction, the permittee may apply for an operation permit. The permittee may not initiate operation of the disposal system without first obtaining an operation permit from the Department. At that time, additional fees may be required.

6.6.3.22 Prior to the issuance of an operation permit the design Engineer shall provide the Department with an approved engineer inspection report(s) demonstrating that system has been constructed in accordance with the approved Design Engineer Report, Plans and Technical Specifications prior to the operation permit being issued.

6.6.3.23 The permittee is responsible for supplying the Department with a certificate or letter of completion/approval from the wastewater treatment plant manufacturer upon construction completion of the wastewater treatment plant, if applicable.

6.6.3.24 For systems with spray irrigation fields the following must be adhered to:

6.6.3.24.1 Construction activities within spray fields must be minimized. Excessive compaction of surface soils by construction equipment must be avoided. Re-grading of pipeline trenches must match original contours. Settlement of trench backfill must be repaired.

6.6.3.24.2 In forested systems, it is necessary to only grub the pipe centerline. Excessive clearing and grubbing must be avoided. Clearing for above-ground piping systems shall involve only vegetation that will interfere with operation of the system.

6.6.3.24.3 All areas disturbed by construction must be re-vegetated prior to initiation of irrigation activities.

6.6.3.24.4 Sloped areas require protection from erosion.

6.6.3.24.5 Pressure testing of the irrigation force mains and laterals shall be conducted during installation to avoid damage to spray fields from re-excavation and repair. Flushing is necessary to clear distribution system pipes of construction debris which will clog sprinkler nozzles. Care should be exercised to prevent erosion or flooding of the spray fields during pipeline flushing. Every effort should be made to keep trash and debris out of the distribution systems. Sprinklers and drain valves shall be checked for proper operation prior to installation.

6.6.3.24.6 Wastewater irrigation on bare soil is not allowed beyond what is necessary for germination to establish a vegetative cover. Wastewater application, at the design rate, may begin only after a uniform vegetative cover has been established.

6.6.3.24.7 Spray fields should be constructed early in the project so a vegetative cover can be re-established on disturbed areas before wastewater irrigation begins.

6.6.3.24.8 Potable, ground or surface water must be used for distribution system testing unless authorized in writing by the Department.

6.6.3.24.9 One (1) growing season may be necessary before new spray fields will accept the design wastewater loading. This start-up period must be considered in the design and operation of these systems.

6.7 General Operation and Maintenance Requirements

6.7.1 The permittee must properly maintain and operate all structures, pipelines, systems and equipment for treatment control and monitoring which are used by the permittee to achieve compliance with the terms and conditions of the permit. Proper operation and maintenance includes, but is not limited to, effective performance based on designed facility removals, adequate funding, effective management, adequate operator staffing and training, and adequate laboratory and process controls including appropriate quality assurance procedures.

6.7.2 Adverse Impact

6.7.2.1 The permittee shall take all steps to minimize any adverse impact to the Waters of the State resulting from operation under the permit. Such steps may include, but not be limited to, accelerated or additional monitoring as necessary to determine the nature and impact of the non-complying discharge or mitigation of such impacts.

6.7.2.2 Operation & Maintenance Plan (O&M Plan)

Following the construction of the facility, the permittee shall submit an O&M Plan detailing the operations of the wastewater treatment facility, the conveyance system, and the disposal system to the Department for review. The permittee shall operate and maintain the land treatment system in accordance with the approved O&M Plan. The O&M Plan must include, but not limited to, the following:

6.7.2.2.1 General

6.7.2.2.1.1 A narrative description and process design summary for the wastewater treatment facility and disposal system including the design wastewater flow and design wastewater characteristics.

6.7.2.2.1.2 A map of the wastewater treatment facility showing the treatment system, storage pond(s), disposal system (e.g. spray fields, RIB area(s)) buffer zones, roads, streams, drainage system discharges, monitoring wells, etc.

6.7.2.2.1.3 A map of interceptor sewers, force mains and major pump stations connected to the wastewater treatment facility, indicating size and capacity.

6.7.2.2.1.4 A schematic and plan of the treatment system and storage pond(s) identifying all pumps, valves and process control points.

6.7.2.2.1.5 A schematic and plan of the disposal distribution system identifying all pumps, valves, gauges, sprinklers, etc.

6.7.2.2.1.6 A copy of the current large system operation permit.

6.7.2.2.1.7 A copy of any other relevant Department permits (e.g. National Pollutant Discharge Elimination System (NPDES) Permit, Biosolids Permit).

6.7.2.2.2 Management and Staffing

6.7.2.2.2.1 Outline of management's responsibilities and duties.

6.7.2.2.2.2 Outline of staffing requirements and duties.

6.7.2.2.2.3 Describe the various job titles, number of positions, qualifications, experience, training, etc.

6.7.2.2.2.4 Define the work hours, duties and responsibilities of each staff member.

6.7.2.2.3 Facility Operation and Maintenance

6.7.2.2.3.1 Treatment system operation and maintenance

6.7.2.2.3.1.1 Operators manual

6.7.2.2.3.1.2 Process control manual

6.7.2.2.3.1.3 O&M manual for all mechanical components of the facility

6.7.2.2.3.1.4 Maintenance schedules and procedures

6.7.2.2.3.1.5 Provide troubleshooting procedures for common or expected problems

6.7.2.2.3.1.6 O&M of back-up, stand-by and support equipment

6.7.2.2.3.2 Disposal System Operation and Maintenance

6.7.2.2.3.2.1 Discuss the design life of the disposal system and identify factors that may shorten its useful life, including procedures or precautions which will compensate for these limitations.

6.7.2.2.3.2.2 Start-up and shut-down procedures

6.7.2.2.3.2.3 System maintenance

6.7.2.2.3.2.4 Equipment inspection schedules

6.7.2.2.3.2.5 Equipment maintenance schedules

6.7.2.2.3.2.6 Discuss operating procedures for adverse conditions

6.7.2.2.3.2.6.1 Wet weather

6.7.2.2.3.2.6.2 Freezing weather

6.7.2.2.3.2.6.3 Saturated soil

6.7.2.2.3.2.6.4 Excessive winds

6.7.2.2.3.2.7 Electrical and mechanical malfunctions

6.7.2.2.3.2.8 Provide troubleshooting procedures for common or expected problems

6.7.2.2.3.2.9 O&M of back-up, stand-by and support equipment

6.7.2.2.3.2.10 System specific considerations

6.7.2.2.3.2.10.1 RIB

6.7.2.2.3.2.10.1.1 System maintenance

6.7.2.2.3.2.10.1.1.1 Dosing schedule and dosing volume(s)

6.7.2.2.3.2.10.1.2 Operation and maintenance

6.7.2.2.3.2.10.1.2.1 Infiltration testing

6.7.2.2.3.2.10.1.2.2 Basin maintenance

6.7.2.2.3.2.10.1.3 Vegetation management

6.7.2.2.3.2.10.1.3.1 Berm maintenance

6.7.2.2.3.2.10.2 Spray irrigation system maintenance

6.7.2.2.3.2.10.2.1 Wastewater application

6.7.2.2.3.2.10.2.1.1 Wastewater loading rate (inches/week)
6.7.2.2.3.2.10.2.1.2 Wastewater application rate (inches/hour)
6.7.2.2.3.2.10.2.1.3 Spray field application cycles
6.7.2.2.3.2.10.2.1.4 Organics, metals, nitrogen, and phosphorus loading (lbs/acre per month, etc.)
6.7.2.2.3.2.10.2.2 Spray irrigation system operation and maintenance
6.7.2.2.3.2.10.2.2.1 Storage pond(s)
6.7.2.2.3.2.10.2.2.2 Irrigation pump station(s)
6.7.2.2.3.2.10.2.2.3 Spray field force main(s) and laterals
6.7.2.2.3.2.10.2.2.4 Irrigation equipment
6.7.2.2.3.2.10.2.3 Vegetation management
6.7.2.2.3.2.10.2.3.1 Discuss how the selected cover crop is to be established, monitored and maintained; how the irrigation schedule will be altered during harvest and regeneration
6.7.2.2.3.2.10.2.3.2 Discuss cover crop cultivation procedures, harvesting schedules and crop uses
6.7.2.2.3.2.10.2.3.3 Discuss buffer zone vegetative cover and its maintenance
6.7.2.2.3.2.10.3 Subsurface disposal systems
6.7.2.2.3.2.10.3.1 Dosing controls
6.7.2.2.3.2.10.3.2 Dosing volume and schedule
6.7.2.2.3.2.10.3.3 Inspection of disposal area(s)
6.7.2.2.3.2.10.3.4 Vegetative cover
6.7.2.2.3.2.10.3.5 Common signs of system specific expected problems and relative troubleshooting procedures.
6.7.2.2.4 Monitoring Program
6.7.2.2.4.1 Sampling procedures, frequency, location and parameters for:
6.7.2.2.4.1.1 Treatment system
6.7.2.2.4.1.1.1 Influent and effluent
6.7.2.2.4.1.2 Disposal system
6.7.2.2.4.1.2.1 Groundwater monitoring wells
6.7.2.2.4.1.2.2 Surface water
6.7.2.2.4.1.2.3 Storage pond(s)
6.7.2.2.4.1.2.4 Lysimeters
6.7.2.2.4.2 Soil sampling and testing
6.7.2.2.4.3 Monitoring ambient conditions
6.7.2.2.4.3.1 Precipitation
6.7.2.2.4.3.2 Wind speed
6.7.2.2.4.3.3 Soil moisture
6.7.2.2.4.4 Interpretation of monitoring results and effect on facility operation
6.7.2.2.4.4.1 Treatment system
6.7.2.2.4.4.2 Disposal system
6.7.2.2.4.4.3 Groundwater
6.7.2.2.4.4.4 Soils
6.7.2.2.5 Records and Reports
6.7.2.2.5.1 Maintenance records

6.7.2.2.5.1.1 Preventive
6.7.2.2.5.1.2 Corrective
6.7.2.2.5.2 Monitoring reports and/or records
6.7.2.2.5.2.1 Treatment system and storage pond(s)
6.7.2.2.5.2.1.1 Influent flow
6.7.2.2.5.2.1.2 Influent and effluent wastewater characteristics
6.7.2.2.5.2.2 Disposal system
6.7.2.2.5.2.2.1 Wastewater volume applied to disposal system
6.7.2.2.5.2.2.2 Disposal system operation scheduling
6.7.2.2.5.2.2.3 Loading rates
6.7.2.2.5.2.3 Annual record of groundwater depth
6.7.2.2.5.2.4 Surface water parameters
6.7.2.2.5.2.5 Soils data
6.7.2.2.5.2.6 Rainfall and climatic data
6.7.2.2.6 Emergency and Contingency Planning

6.7.3 An operator log must be kept on site at all times. Each section of the disposal system shall be numbered and referred to by number in the operator log. All records and reports shall also be kept in a bound log book and available upon request for review by the Department. Copies of operating log books shall be provided at the request of the Department. This log shall, at a minimum, include the following applicable items:

6.7.3.1 Time spent at the treatment facility on any date.

6.7.3.2 Details of the operation and maintenance performed on the wastewater treatment and disposal system on any date.

6.7.3.3 The volume of wastewater discharged to each section of the disposal system on any date and the acreage over which the wastewater was distributed.

6.7.3.4 Identification of those portions of the disposal system that were ponding on any date.

6.7.3.5 A record of any deviations from the operation and maintenance manual.

6.7.3.6 General daily weather conditions.

6.7.3.7 A site map showing the disposal area with each RIB, absorption facility or center pivot or solid set spray zone numbered.

6.7.3.8 A record of all actions taken to correct violations of the 7 **Del.C.**, Ch. 60, Department regulations and permit conditions.

6.7.3.9 A record of all site management activities undertaken such as RIB maintenance, planting, reseeding, harvesting of crops, commercial fertilizer applications and any other chemical additions or applications.

6.7.3.10 Identify any RIB that is ponded for more than 72 hours.

6.7.3.11 Loading and resting periods for each dosing event of any large system must be documented.

6.7.3.12 Record the date, volumes and destination of biosolids removed from the facility. This shall be completed by measuring the tank level before and after the biosolids removal and calculating the volume accordingly.

6.7.4 Organic chemical septic tank cleaning agents shall not be used in large on-site wastewater treatment and disposal systems.

6.7.5 Grease traps shall be cleaned when 75% of the grease retention capacity has been reached.

6.7.6 The sites of the initial and replacement absorption facilities shall not be covered by impervious materials subject to vehicular traffic or other activity which would adversely affect the soils. These sites must be maintained so that they are free from encroachments by accessory buildings and additions to the main building.

6.7.7 The Department may impose specific operation and maintenance requirements for large on-site wastewater treatment and disposal systems to assure continuity of performance.

6.7.8 Large systems which serve communities that experience a significant variation in flow on an annual basis, may be prescribed specific criteria in the permit for taking certain treatment units out of service during periods of low flow. The criteria will establish procedures for winterization and restart.

6.8 Monitoring Requirements

6.8.1 Groundwater Monitoring

6.8.1.1 A groundwater monitoring network shall be constructed to ensure wastewater-related contaminants are detected and quantified. The monitoring network must account for nearby wells and surface water bodies. Wells installed for the Hydrogeologic Suitability Report (HSR) may be used for long-term groundwater compliance monitoring provided they are constructed and classified according to Delaware Regulations Governing the Construction and Use of Wells and are located in positions suitable to provide representative samples.

6.8.1.2 Any monitor wells constructed after the completion of the HSR must have a minimum of three (3) groundwater samples collected and analyzed to establish ambient conditions in the new well(s) (see Section 6.2.3.5).

6.8.1.3 Spray irrigation systems require a minimum of six (6) monitor wells (MWs): one (1) upgradient, two (2) downgradient, one (1) within the wetted field, one (1) up gradient and one (1) down gradient of the treatment and storage pond(s).

6.8.1.4 All systems other than spray irrigation will require a minimum of four (4) MWs: one (1) upgradient, one (1) within, and two (2) downgradient of the proposed disposal area.

6.8.1.5 The Department may require additional wells depending on site or project characteristics.

6.8.1.6 All RIB systems with a design flow ≥ 100,000 gpd shall install a minimum of three (3) nested monitor well sets with each nest having a minimum of two (2) wells with varying depths and screen intervals. The nested wells shall be located and constructed based on a particle tracking analysis in the numerical model developed for the groundwater mounding analysis in the HSR.

6.8.1.7 Groundwater monitoring shall be performed on a quarterly basis unless otherwise required by the Department.

6.8.1.8 Groundwater sampling shall include the following parameters unless otherwise required by the Department:

Parameter	Unit Measurement	Monitoring Frequency	Sample Type
pH	S.U.	Quarterly	Field Test
Temperature	°F	Quarterly	Field Test
Specific Conductance	µS/cm	Quarterly	Field Test
Dissolved Oxygen	mg/L	Quarterly	Field Test
Depth to Water Table	Hundredth of a foot	Quarterly	Field Test
Ammonia Nitrogen	mg/L	Quarterly	Grab
Nitrate + Nitrite Nitrogen	mg/L	Quarterly	Grab
Total Nitrogen	mg/L	Quarterly	Grab
Total Coliforms	Col/100 ml	Quarterly	Grab
Fecal Coliform	Col/100 ml	Quarterly	Grab
Total Phosphorus	mg/L	Quarterly	Grab
Sodium	mg/L	Quarterly	Grab
Chloride	mg/L	Quarterly	Grab
Total Dissolved Solids	mg/L	Quarterly	Grab

6.8.1.9 Specific conductance, pH, temperature, and dissolved oxygen shall be measured using a calibrated field meter during well purging, which should be performed using either a submersible or peristaltic pump. Once the field parameters have stabilized, a groundwater sample shall be obtained for the parameters listed above and analyzed by a certified laboratory.

6.8.1.10 All large systems ≥ 100,000 gpd and all RIBs regardless of size must maintain, at a minimum, one (1) monitor well within the disposal area with a pressure transducer to record water levels. Pressure transducer readings must, at a minimum, be recorded at a one (1) hour frequency. These readings shall be maintained and made available to the Department upon request.

6.8.1.11 Ensure that the water levels are consistently taken directly below the points where the TOC elevations were read.

6.8.1.12 Exceptions to monitoring requirements may be considered by the Department.

6.8.2 Influent and Effluent Monitoring

6.8.2.1 Influent samples may be grab samples collected in accordance with the process control requirements.

6.8.2.2 The applicable effluent samples shall be collected using a composite sampler.

6.8.2.3 All influent and effluent samples shall be tested for the following parameters unless otherwise specified in the permit:

Parameter	Unit Measurement	Monitoring Frequency	Sample Type	
			Influent	Effluent
Flow	Gallons Per Day	Continuous	Recorded	Recorded
BOD_5	mg/L	2 x Month	Grab	Composite
TSS	mg/L	2 x Month	Grab	Composite
Total Dissolved Solids	mg/L	Quarterly	NA	Grab
Fecal Coliform	Col/100 ml	Quarterly	NA	Grab
Total Nitrogen	mg/L	2 x Month	Grab	Composite
Ammonia Nitrogen	mg/L	Monthly	Grab	Composite
Nitrate/Nitrite as Nitrogen	mg/L	Monthly	Grab	Composite
pH	S.U.	3 x per week	Grab	Composite
Total Phosphorus	mg/L	Monthly	Grab	Composite
Chloride	mg/L	Quarterly	Grab	Composite

6.8.2.4 Quality Assurance Practices

6.8.2.4.1 The permittee is required to show the validity of all effluent monitoring and groundwater monitoring data by requiring its laboratory to adhere to the following minimum quality assurance practice:

6.8.2.4.1.1 Duplicate[1] and spiked[2] samples must be run for each effluent monitoring and groundwater monitoring constituent in the permit on 5% of the samples, or at least on one sample per quarter, whichever is greater. If the analysis frequency is less than one sample per quarter, duplicate and/or spiked samples must be run for each analysis.

[1]Duplicate samples are not required for the following parameters: color, temperature, and turbidity.

[2]Spike samples are not required for the following parameters: Acidity, Alkalinity, Bacteriological, Benzidine, Chlorine, Color, Dissolved Oxygen, Hardness, pH, Oil & Grease, Radiological, Residues, Temperature, Turbidity, BOD_5 and Total Suspended Solids.

6.8.2.4.1.2 For spiked samples, a known amount of each constituent is to be added to the discharge sample. The amount of constituent added should be approximately the same amount present in the unspiked sample, or must be approximately that stated as maximum or average in the discharge permit.

6.8.2.4.1.3 The data resulting from 6.8.2.4.1.1 and 6.8.2.4.1.2 shall be summarized in the annual report in terms of precision; percent recovery; number of duplicate and spiked samples run; date and laboratory log number of samples run, and name of analyst.

6.8.2.4.1.4 Precision shall be calculated by the standard deviation (s) formula $s = (\Sigma d^2/k)^{.5}$ where d is the difference between duplicate results and k is the number of duplicate pairs used in the calculations.

6.8.2.4.1.5 Percent recovery (R) shall be reported on the basis of the formula $R = 100\ (F-I)/A$ where F is the analytical result of the spiked sample, I is the result before spiking of the sample, and A is the amount of constituent added

to the sample.

6.8.2.4.1.6 The percent recovery in Quality Assurance Practice shall be summarized yearly in terms of mean recovery and standard deviation from the mean. The formula, s = $[\sum((x-\bar{x})^2)/(n-1)]^{1/2}$ where s is the standard deviation around the mean $x-\bar{x}$, x is an individual recovery value, and n is the number of data points, shall be applied.

6.8.2.4.1.7 The permittee or contract laboratory is required to annually analyze an external quality control reference sample for each pollutant. These are available through the EPA regional quality assurance coordinator. Results shall be included in the annual report Quality Assurance Practice, see Section 6.8.2.4.1.3.

6.8.2.4.1.8 The permittee and/or contract laboratory is required to maintain an up-to-date and continuous record of the method used, any deviations from the method or options employed in the reference method, reagent standardization, equipment calibration and the data obtained in Quality Assurance Practices, see Sections 6.8.2.4.1.1, 6.8.2.4.1.2 and 6.8.2.4.1.6.

6.8.2.4.1.9 If a contract laboratory is utilized, the permittee shall report the name and address of the laboratory and the parameters analyzed together with the monitoring data required.

6.8.3 Soils Monitoring

6.8.3.1 Three (3) composite soil samples from each major soil series must be collected and analyzed for the parameters below. Soil pH is an indicator of changes in soil chemistry. If soil pH remains constant, analysis of cation exchange capacity and percent base saturation is not required. If the soil pH changes by one (1) unit, analysis of these parameters will be required.

Parameter	Unit Measurement	Measurement Frequency	Sample Type
pH	S.U.	Annually	Soil Composite
Organic Matter	%	Annually	Soil Composite
Phosphorus (as P_2O_5)	mg/kg	Annually	Soil Composite
Potassium	mg/kg	Annually	Soil Composite
Total Nitrogen	mg/L	Quarterly	Soil Composite
Nitrate as Nitrogen	mg/L	Quarterly	Soil Composite
Sodium Adsorption Ratio	meq/100g	Annually	Soil Composite
Cadmium	mg/kg	Once per 4 years	Soil Composite
Nickel	mg/kg	Once per 4 years	Soil Composite
Lead	mg/kg	Once per 4 years	Soil Composite
Zinc	mg/kg	Once per 4 years	Soil Composite
Copper	mg/kg	Once per 4 years	Soil Composite
Cation Exchange Capacity	meq/100g	*Only if soil pH changes significantly	Soil Composite
Phosphorus Adsorption	meq/100g	**Only if soil phosphorus levels become excessive for plant growth	Soil Composite
Percent Base Saturation	%	*Only if soil pH changes significantly	Soil Composite

* A significant change in soil pH is defined as a change of one (1) or more standard units (S.U.) from the original value established in the Design Engineer Report.

** Excessive levels of soil phosphorus are defined by the Delaware Nutrient Management Commission. Soil phosphorus levels must be tested in accordance with the University of Delaware soil testing methods (Gartley, 2002). If the soil phosphorus levels become excessive, the permittee must perform a Phosphorus Site Index (PSI) study. The results must be submitted to the GDS within 30 days of study completion. Based on these, the GDS may require the permittee to submit a plan detailing steps to reduce the phosphorus loading rates at the site.

6.8.3.2 Wastewater systems receiving industrial process wastes or water treatment facility residuals may be required to monitor metals, salts or other pollutants in soils and vegetation. The parameters and monitoring frequencies will be determined on a case by case basis.

6.8.4 Lysimeter Percolate Monitoring

6.8.4.1 To allow for percolate monitoring, a minimum of one (1) pore-liquid sampler (lysimeter) as defined in ASTM Standard (D 4696) (Standard Guide for Pore-Liquid Sampling from the Vadose Zone) must be installed within the disposal area.

6.8.4.2 For existing systems, if lysimeter data exceeds permitted performance

standards for any parameter required to be monitored, on an average annual basis, the Department will review the ground water monitoring data to determine if any down gradient monitoring wells exceed permitted performance standards for those parameters on an average annual basis. No existing facility will be found in violation of the permitted performance standards unless the down gradient monitoring well data also exceeds the required parameters on an average annual basis. The lysimeter data will be used as an early indicator of potential permit exceedence.

6.8.4.3 The constituents are listed below in highest priority. In the event that enough sample volume is not obtained to test for all parameters listed, the sample shall be tested for as many constituents possible.

Parameter	**Unit Measurement**	**Measurement Frequency**	**Sample Type**
Total Nitrogen	mg/L	Monthly	Grab
Total Phosphorus	mg/L	Monthly	Grab
Nitrate + Nitrite as Nitrogen	mg/L	Monthly	Grab
Ammonia as Nitrogen	mg/L	Monthly	Grab
Chloride	mg/L	Monthly	Grab
Sodium	mg/L	Monthly	Grab
Total Dissolved Solids	mg/L	Monthly	Grab
pH	S.U.	Monthly	Field Test
Specific Conductance	µS/cm	Monthly	Field Test
Temperature	°C	Monthly	Field Test

6.8.5 Monitoring Reporting

6.8.5.1 Monitoring results obtained during the previous one (1) month/quarter shall be summarized and reported on an approved monitoring report form(s) postmarked no later than the 28th day of the month following the completed reporting period. Unless otherwise specified in the permit, signed reports/forms and field data shall be submitted to the Department at the following address:

Delaware Department of Natural Resources and Environmental Control
Groundwater Discharges Section/Large Systems Branch
89 Kings Highway
Dover, DE 19901
Telephone: (302) 739-9948
Fax: (302) 739-7764

6.8.5.2 All field sampling logs and laboratory results for samples obtained from a well shall be identified by the DNREC ID affixed to the well.

6.8.5.3 If the permittee monitors any parameter at the location(s) designated in the permit more frequently than required, using approved analytical methods, the results shall be reported to the Department on an approved monitoring report form. Such increased frequency shall also be indicated.

6.8.6 Monitoring modifications

6.8.6.1 Requests for monitoring modifications must be submitted to the Department in writing. Such requests must clearly state the reason for and nature of the proposed modification and, where applicable, must contain supporting scientific information, analysis, and justification. Requests will be addressed by the Department on a case by case basis.

6.9 Annual Report

6.9.1 The permittee shall submit to the Department an annual report summarizing the operations, management, administration and maintenance of the facility for the calendar year. The annual report must be submitted to the Department on or before February 28th of each year. The report must be submitted to the address identified in Section 6.8.4 unless otherwise specified in the facility's permit. The report must, at a minimum, include the following applicable items. The report must also include any additional items specified in the facility's permit.

6.9.1.1 Influent flow to treatment system

6.9.1.1.1 Total annual flow

6.9.1.1.2 Annual average daily flow

6.9.1.1.3 Average monthly flow

6.9.1.1.4 Peak monthly flow

6.9.1.2 Effluent flow to disposal system

6.9.1.2.1 Total annual flow

6.9.1.2.2 Annual average daily flow

6.9.1.2.3 Average monthly flow

6.9.1.2.4 Peak monthly flow

6.9.1.3 Total number of equivalent dwelling units connected to the system.

6.9.1.4 Number of equivalent dwelling units connected to the system during the calendar year.

6.9.1.5 Effluent BOD_5 annual average concentration.

6.9.1.6 Effluent TSS annual average concentration.

6.9.1.7 Effluent total nitrogen annual average concentration and annual total nitrogen mass load.

6.9.1.8 Effluent total phosphorus annual average concentration and annual total phosphorus mass load.

6.9.1.9 Biosolids removed (total gallons).

6.9.1.10 Daily rainfall, temperature, wind speed and direction.

6.9.1.11 Operational and maintenance activities.

6.9.1.12 Vegetative management practices followed during the previous year and anticipated for the coming year.

6.9.1.13 Documentation verifying the calibration of influent and effluent flow meters.

6.9.1.14 Spray irrigation facilities:

6.9.14.1 The annual volume of wastewater spray irrigated on each field with the total nitrogen and phosphorus loading applied from all sources to each field in pounds per acre per field as well as total pounds of nitrogen and phosphorus

removed through crop uptake.

6.9.14.2 Nitrogen balance calculation spreadsheet using actual effluent, nitrogen monitoring data and any additional applied nitrogen.

6.9.14.3 A chemical analysis of soils from each field for the soil monitoring constituents identified in the permit.

6.9.14.4 Identification of those portions of the field(s) which have been prone to ponding, pooling or runoff.

6.9.14.5 The type and amount of crop removed from each field.

6.9.2 All records and information resulting from the monitoring activities required by the construction or operation permit or these Regulations including all records of performed analyses, calibration and maintenance of instrumentation and recording from continuous monitoring instrumentation shall be retained for five (5) years. This period of retention shall be extended automatically during the course of any unresolved litigation regarding the regulated activity or regarding control standards applicable to the permittee or as requested by the Department.

6.10 Temporary Holding Tank

A permit must be obtained from the Department prior to the construction, operation, maintenance or repair of a temporary holding tank. In order to obtain a permit, the applicant must submit a permit application (see Section 6.10.3) to the Department for review and approval. A temporary holding tank permit shall not exceed a five (5) year period and may be extended at the discretion of the Department.

6.10.1 Temporary holding tank permits may be issued for large systems when:

6.10.1.1 A permit to construct the wastewater treatment and disposal system has been issued by the Department and is still valid.

6.10.1.2 A permit to construct the wastewater conveyance system, including all lift stations and force mains has been issued by the Department.

6.10.1.3 Construction of the wastewater treatment and disposal system has been initiated.

6.10.1.4 A construction completion schedule demonstrates the construction of the wastewater treatment and disposal system will be completed prior to the expiration date of the temporary holding tank permit.

6.10.1.5 The number of dwellings to be served by the temporary holding tank permit is at the discretion of the Department and will be based on the design flows, number of equivalent dwelling units and the minimum volume of wastewater necessary to properly operate the initial train of the wastewater treatment facility.

6.10.1.6 Holding tanks shall be equipped with a visual and/or audible alarm system that indicates when the tank is 90% full. An alarm which utilizes off-site notification may be used in lieu of the visual and audible alarm system.

6.10.2 Regional Temporary Holding Tank

6.10.2.1 A temporary holding tank permit for a satellite subdivision that will connect to a utility or government owned regional facility may be issued to the utility or government agency when:

6.10.2.1.1 A permit to construct a regional wastewater treatment and disposal facility has been issued by the Department and is still valid.

6.10.2.1.2 A construction completion schedule that demonstrates the construction of the regional facility, force main, lift station(s) and appurtenances

from the satellite subdivision to the regional facility will be completed prior to the expiration date of the temporary regional holding tank permit.

6.10.2.2 The maximum amount of units to be connected to a regional temporary holding tank system shall be 49. Additional connections to the regional temporary holding tank system will not be permitted.

6.10.3 The permit application must include all of the following applicable items:

6.10.3.1 DNREC application form.

6.10.3.2 Applicable Departmental fees.

6.10.3.3 Project overview.

6.10.3.4 Zoning certificate.

6.10.3.5 Design flows.

6.10.3.6 Number of equivalent dwelling units that will be served.

6.10.3.7 Design drawings including location.

6.10.3.8 Design and sizing calculations.

6.10.3.9 System technical specifications.

6.10.3.10 Alarm system specifications.

6.10.3.11 Non-Hazardous Liquid Waste Transporters Permit.

6.10.3.12 A copy of the agreement with a licensed operator and license certification.

6.10.3.13 Legal documentation of the agreement between the owner and a utility provider.

6.10.3.14 A county conditional use ordinance approval.

6.10.3.15 A CPCN for the development.

6.10.4 General Conditions

6.10.4.1 The capacity of the temporary holding tank must be designed for a minimum of two (2) days capacity at design flows of 300 gpd/dwelling unit provided the applicant submits an executed contract with a licensed liquid waste hauler to inspect and pump the temporary holding tank levels every two (2) days.

6.10.4.2 Holding tanks shall be equipped with a visual and/or audible alarm system that indicates when the tank is 90% full. An alarm which utilizes off-site notification may be used in lieu of the visual and audible alarm system.

6.10.4.3 See Section 6.6 for construction requirements.

6.11 Distribution of Treated Wastewater

6.11.1 Distribution of treated wastewater for disposal, reuse, or any other purpose is prohibited without first obtaining a permit from the Department addressing the activity.

6.11.2 Any person receiving and reusing treated wastewater must have a permit from the Department and/or must be receiving the treated wastewater in accordance with a permit issued by the Department specifically authorizing the activity.

6.11.3 General design considerations for wastewater treatment facilities distributing treated wastewater

6.11.3.1 Distributed wastewater must be treated, filtered and meet the treatment requirements for the specific purpose of its use but at a minimum of limited public access levels as specified in Section 6.3.2.3.3.1.

6.11.3.2 Distributed treated wastewater must meet PSN1 and PSP1 limits for non-irrigation activities and for irrigation activities that are not required to have a Nutrient Management Plan.

6.11.3.3 Back flow controls must be installed if the distribution line will also be connected to a ground, surface or fresh water supply. Also refer to the Regulations Governing the Construction and Use of Wells.

6.11.3.4 A low pressure detection system to automatically shut down distribution pumps in the event of force main, sub-main or lateral blowout is required.

6.11.3.5 A high pressure shut-off at the distribution pump station is required.

6.11.3.6 Wastewater treatment facilities permitted to distribute treated wastewater will be evaluated by the Department as to whether or not they will receive an increase in the permitted disposal capacity for the volume distributed.

6.11.4 Application Requirements

6.11.4.1 Any utility, municipality or wastewater treatment facility proposing to provide treated wastewater for distribution must submit to the Department an application for a permit.

6.11.4.2 When possible, the applicant shall provide electronic copies, in addition to hard copies, of all submittals. Providing the electronic copies in a searchable format may expedite the review of the application.

6.11.4.3 The application must include, at a minimum, the following information as applicable and must bear the signature and seal of a Delaware licensed Professional Engineer:

6.11.4.3.1 Application form.

6.11.4.3.2 Applicable fees.

6.11.4.3.3 A list of all sites and users of the treated wastewater to include type of use of the wastewater.

6.11.4.3.4 Tax map numbers for proposed reuse site.

6.11.4.3.5 Zoning certificates for proposed reuse site.

6.11.4.3.6 Conditional use approval from the appropriate County.

6.11.4.3.7 Permit from the Department for distribution piping. A separate application must be submitted to obtain a permit for the force mains that will be installed to distribute the treated wastewater.

6.11.4.3.8 Which watershed the proposed use will be located including the 12 digit HUC (Hydrologic Unit Code).

6.11.4.3.9 Any relevant mapping, including delineation of wetlands, watercourses and ditches.

6.11.4.3.10 Details on the level of treatment proposed.

6.11.4.3.11 Details on any necessary facility upgrades, the force mains to each distribution point, showing connection points, irrigation equipment and redundant back flow controls if the pivots will also be connected to a fresh water supply.

6.11.4.3.12 A process flow diagram including the sample points for compliance monitoring and the location of flow meters. The process flow diagram must demonstrate provisions for ensuring water not meeting the treatment requirements is recycled through the treatment process and not distributed. Indicate on the process flow diagram the intended locations for effluent sampling monitoring.

6.11.4.3.13 A prioritization of treated wastewater allocation between all dedicated spray fields, farm lands, park lands, golf courses, and any other distribution or disposal points.

6.11.4.3.14 The proposed concentrations of total nitrogen and total phosphorus in the treated effluent.

6.11.4.3.15 Wastewater treatment facilities distributing treated wastewater for land application on areas that are not required to have a Nutrient Management Plan by the Delaware Department of Agriculture must provide detailed monthly nutrient loading calculations. Calculations must account for application of nutrients from treated wastewater and commercial fertilizers.

6.11.4.4 Site assessment must include the following, if applicable:

6.11.4.4.1 Abandoned wells within the reuse/disposal area must be identified as well as all domestic, irrigation, commercial, industrial, and public wells within 1,000 feet of the reuse/disposal area.

6.11.4.4.2 A report summarizing the results of the soils sampling and the calculated remaining site life on a constituent by constituent basis in accordance with Section 6.5.4.3.1.1.7.2.

6.11.5 Operation and Maintenance Requirements

6.11.5.1 The wastewater treatment facility must provide to the Department an amended Operation and Maintenance Plan addressing the distribution of treated wastewater.

6.11.6 Monitoring Requirements

6.11.6.1 Treated Wastewater Monitoring Requirements

Monitoring requirements for the treated wastewater provided to all recipients must be as follows unless otherwise stipulated in the operation permit.

Parameter	Unit Measurement	Monitoring Frequency	Sample Type	Sampling Location
Effluent Flow	Gal/day	Continuous	Recorded/ Totalized	After storage, prior to distribution
Turbidity	NTU	Continuous	Recorded	Prior to storage
Total Residual Chlorine	mg/l	Continuous	Recorded	After storage, prior to distribution
pH	S.U.	Daily	In-situ	After storage, prior to distribution
BOD_5	mg/L	Twice per month	Composite	Prior to storage
Total Suspended Solids	mg/L	Twice per month	Composite	Prior to storage
Ammonia Nitrogen	mg/L	Twice per month	Composite	After storage, prior to distribution
Chloride	mg/L	Twice per month	Composite	After storage, prior to distribution
Nitrate + Nitrite Nitrogen	mg/L	Twice per month	Composite	After storage, prior to distribution
Organic Nitrogen	mg/L	Twice per month	Calculation	After storage, prior to distribution
Potassium	mg/L	Twice per month	Composite	After storage, prior to distribution
Sodium	mg/L	Twice per month	Composite	After storage, prior to distribution
Total Nitrogen	mg/L	Twice per month	Composite	After storage, prior to distribution
Total Phosphorus	mg/L	Twice per month	Composite	After storage, prior to distribution
Fecal Coliform	Col/100 ml	Twice per month	Grab	After storage, prior to distribution
Cadmium	mg/L	Annually – performed in the beginning of April	Composite	After storage, prior to distribution
Copper	mg/L	Annually – performed in the beginning of April	Composite	After storage, prior to distribution
Lead	mg/L	Annually – performed in the beginning of April	Composite	After storage, prior to distribution
Nickel	mg/L	Annually – performed in the beginning of April	Composite	After storage, prior to distribution
Zinc	mg/L	Annually – performed in the beginning of April	Composite	After storage, prior to distribution

6.11.6.2 Soil Monitoring Requirements

If the treated wastewater is to be reused for irrigation activities, background and decennial soils sampling must be performed for the parameters listed below. A minimum of one (1) composite sample must be taken for each 50 acre area, unless otherwise provided in the permit.

Parameter	Unit Measurement	Sample Type
pH	S.U.	Soil Composite
Organic Matter	%	Soil Composite
Phosphorus (as P_2O_5)	mg/kg	Soil Composite
Potassium	mg/kg	Soil Composite
Sodium Adsorption Ratio		Soil Composite
Cadmium	mg/kg	Soil Composite
Nickel	mg/kg	Soil Composite
Lead	mg/kg	Soil Composite
Zinc	mg/kg	Soil Composite
Copper	mg/kg	Soil Composite
Cation Exchange Capacity	meq/100g	Soil Composite
Phosphorus Adsorption	meq/100g	Soil Composite
Percent Base Saturation	%	Soil Composite

6.11.6.2.1 The site assimilative capacity for cadmium, copper, lead, nickel, zinc and phosphorus must be determined via calculation on a constituent by constituent basis to determine the site life for each reuse area receiving the treated wastewater.

6.11.6.2.2 The cumulative metal loading to each reuse area must not exceed the values set forth in Exhibit HH. The number of years treated wastewater may be applied to a site must be based on the allowable cumulative metal loading values set forth in Exhibit HH. Providing treated wastewater to any particular reuse area must cease when any one of the cumulative metal limits is reached for that area.

6.11.6.2.3 Prior to the initiation of any reuse activity, and every 10 years thereafter, a report must be submitted to the Department containing the following information for each reuse area:

6.11.6.2.3.1 The results of the soils sampling.

6.11.6.2.3.2 The calculated remaining site life on a constituent by constituent basis for phosphorus, cadmium, copper, lead, nickel and zinc.

6.11.7 Reporting

6.11.7.1 The Wastewater Treatment Facility must report the following information to:

6.11.7.1.1 The Department:

6.11.7.1.1.1 Monthly - The quality and quantity of the treated wastewater provided to each of the recipients on a monthly basis.

6.11.7.1.1.2 Annual - An Annual Summary Report that summarizes all parameters monitored as required in Section 6.9. The report must include the annual volume of wastewater provided to each recipient and any additional items specified in the permit. If the recipient is reusing the treated wastewater for agricultural use in accordance with 3 **Del.C.** §2301, the report must also include the total nitrogen, total phosphorus, potassium and metals loading to each recipient reported in pounds. The cumulative metals loading must also be calculated and reported. The total number of acres under irrigation for each recipient for that reporting year must also be indicated.

6.11.7.1.1.3 Decennial - Results of soils sampling and the calculated remaining site life on a constituent by constituent basis for phosphorus, cadmium, copper, lead, nickel and zinc.

6.11.7.1.2 Recipients of treated wastewater:

6.11.7.1.2.1 Weekly - The quantity of treated wastewater provided to each recipient on a weekly basis.

6.11.7.1.2.2 Monthly - Copies of all effluent monitoring results.

6.11.7.1.2.3 Annual - A copy of the Annual Summary Report.

6.11.8 Agricultural Use of Distributed Treated Wastewater

Agricultural use of distributed treated wastewater is the distribution of treated wastewater to farmers for irrigation of agricultural crops in accordance with 3 **Del.C.** §2301. Sites using treated wastewater in accordance with 3 **Del.C.** §2301 which have incorporated the use of treated wastewater in a Delaware Department of Agriculture approved Nutrient Management Plan are exempt from the requirements of Sections 6.0 through Section 6.10, and Section 6.12 of these Regulations unless specifically referenced within this Section 6.11. Wastewater treatment facilities proposing to distribute treated wastewater for agricultural use must comply with all requirements set forth in Section 6.11 and must adhere to the requirements of this Section 6.11.8.

6.11.8.1 General Requirements

6.11.8.1.1 Wastewater treatment facilities permitted to distribute treated wastewater to farmers will not receive an increase in the permitted disposal capacity for the volume distributed.

6.11.8.1.2 Providing treated wastewater to farmers to utilize in accordance with 3 **Del.C.** §2301 must not cause the quality of Delaware's water and/or aquatic resources to be further impaired.

6.11.8.1.3 In addition to the limits found in Section 6.3.2.3.3.2, the treated wastewater to be distributed must not exceed a chloride concentration of 250 mg/L on an annual average basis.

6.11.8.1.4 The total volume of treated wastewater that may be distributed to each farmer must not exceed agronomic rates as determined and reported in a Delaware Department of Agriculture approved Nutrient Management Plan; and an irrigation plan developed to NRCS standards.

6.11.8.1.5 The total volume of treated and filtered wastewater distributed must be recorded/calculated over a weekly period for each user. The volume must be reported in accordance with Section 6.11.8.3.

6.11.8.2 Application Requirements

6.11.8.2.1 One application shall be coordinated, completed and submitted to both DDA and DNREC. The application submitted to DNREC shall omit the Nutrient Management Plan.

6.11.8.2.2 The application must include:

6.11.8.2.2.1 All applicable items iterated in Section 6.11.4.

6.11.8.2.2.2 The wastewater treatment facility must execute an Agricultural Spray Agreement with each farmer receiving treated wastewater. The agreement must include a point of contact and mailing address for the farmer, and Land Zoning/Ownership verification of the farmers' properties. If the farmer does not own the property, the property owner must also sign the agreement. A copy of the executed agreement must accompany the application.

6.11.8.2.2.3 Indicate which watershed the farm lands are located in including the 12 digit HUC (Hydrologic Unit Code).

6.11.8.2.2.4 Provide a map of the fields, showing the acreage at each farm to be irrigated with treated wastewater.

6.11.8.2.2.5 Indicate whether there are any watercourses on the farm lands proposed for irrigation of treated wastewater.

6.11.8.2.2.6 If a perennial stream traverses or lies at the boundary of the farm lands, the wastewater provider will be required to perform water quality monitoring of the stream. Sampling upstream and downstream of the wetted field area as well as flow measurement may be required. The parameters and frequency of monitoring will be specified as a special condition in the facility's operation permit.

6.11.8.2.2.7 Identification of any drainage structures on the farm lands proposed for irrigation of treated wastewater. Farm lands incorporating drainage improvements that result in a point discharge to surface waters are not eligible to receive and reuse treated wastewater.

6.11.8.2.2.8 Background soil samples of farm lands.

6.11.8.2.2.9 Monitoring results of treated wastewater.

6.11.8.2.2.10 Site life calculations based on cadmium, copper, lead, nickel, phosphorus and zinc.

6.11.8.2.2.11 Calculation of total volume of treated wastewater the farm land can assimilate annually based on soil types and agronomic irrigation rates for crops to be grown.

6.11.8.3 Reporting

6.11.8.3.1 The Wastewater Treatment Facility must report the following information to Delaware Department of Agriculture:

6.11.8.3.1.1 Monthly - Copies of all effluent monitoring results for the farmer to utilize in their Nutrient Management Plans/Annual Reporting.

6.11.8.3.1.2 Annual – A copy of the Annual Summary Report.

6.12 Fees

The Department has established a schedule of annual and/or one-time fees. One-time fees shall be submitted to the Department at time of application. Annual fees shall be submitted to the Department upon receipt of notice or in accordance with the fee payment schedule. Failure to pay fees constitutes grounds for denial of permits and revocation of previously issued permits.

6.12.1 Permitting

6.12.1.1 A fee is required upon submittal of a permit application, in accordance with the latest DNREC fee schedule.

6.12.2 Advertisement

6.12.2.1 An advertisement fee is required upon submittal of a permit application, in accordance with the latest DNREC fee schedule.

6.12.3 Compliance

6.12.3.1 A fee is required for annual compliance inspections in accordance with the latest DNREC fee schedule.

6.13 Severability

6.13.1 If any part of these Regulations, or the application of any part thereof, is held invalid or unconstitutional, the application of such part to other persons or

circumstances and the remainder of these Regulations shall not be affected and shall be deemed valid and effective.

6.14 Wastewater Treatment Facility Closure/Abandonment

6.14.1 Any wastewater treatment facility that is to be abandoned must submit a proposed closure and abandonment work plan with procedures on how the facility will be abandoned by the responsible party for review and approval by the Department. The site may require remediation which must also be addressed in the work plan.

6.14.2 Upon review and approval of the work plan and completion of all closure and abandonment actions the responsible party must contact the Department for a final inspection of the facility.

7.0 Sources of Information

7.1 Organizations

7.1.1 American Society of Agricultural Engineers, 2950 Niles Road, St. Joseph, Michigan 49085.

7.1.2 American Society of Agronomy, 667 S. Segoe Road, Madison, Wisconsin 53711.

7.1.3 Delaware Agricultural Extension Service, College of Agriculture, University of Delaware, Newark, Delaware 19703.

7.1.4 The Irrigation Association, 13975 Connecticut Avenue, Silver Spring, Maryland 20906.

7.2 Technical References

7.2.1 Andres, A. S. and Martin, M. J., 2005, Estimation of the Water Table for the Inland Bays Watershed, Delaware: Delaware Geological Survey Report of Investigations No. 68, 20 p.

7.2.2 Brady, N.C. 1974. The Nature and Properties of Soils, Eighth Edition. (ISBN 0-02-313350-3) MacMillan: New York, New York.

7.2.3 Cole, D., C. Henry, and W. Nutter. 1986. Forest Alternative for Land Treatment of Municipal and Industrial Wastes. University of Washington Press, Seattle, 592 pp.

7.2.4 The Irrigation Association. 1983. Irrigation, Fifth Edition. Silver Spring, Maryland.

7.2.5 Metcalf and Eddy, Inc. 1979. Wastewater Engineering: Treatment, Disposal and Reuse. (ISBN 0-07-041667-X) McGraw-Hill: New York, New York.

7.2.6 Overcash, M.R. and P. Pal. 1979. Design of Land Treatment Systems for Industrial Wastes - Theory and Practice. Ann Arbor Science: Ann Arbor, Michigan.

7.2.7 Reed, S.C. and R.W. Crites. 1984. Handbook of Land Treatment Systems for Industrial and Municipal Wastes. (ISBN 0-8155-0991-X) Noves Publications: Park Bridge, New Jersey.

7.2.8 Rich, L.G. 1980. Low Maintenance, Mechanically Simple Wastewater Treatment Systems. (ISBN 0-07-052252-9) McGraw-Hill: New York, New York.

7.2.9 Smedema, L.K. and D.W. Rycroft. 1983. Land Drainage: Planning and Design of Agricultural Drainage Systems. (ISBN 0-8014-1629-9) Cornell University Press: Ithaca, New York.

7.2.10 United States Department of Agriculture. National Engineering Handbook, Sections 15 and 16. Soil Conservation Service. Washington, D.C.

7.2.11 United States Environmental Protection Agency. 1981. Process Design Manual: Land Treatment of Municipal Wastewater. (EPA 625/1-81-013) Center for Environmental Research Information. Cincinnati, Ohio.

7.2.12 United States Environmental Protection Agency. 1983. Design Manual: Municipal Wastewater Stabilization Ponds. (EPA-625/1-83-015) Center for Environmental Research Information. Cincinnati, Ohio.

7.2.13 Water Pollution Control Federation, American Society of Civil Engineers. 1977. WPCF Manual of Practice No. 8: Wastewater Treatment Plant Design. Washington, D.C.

8.0 Exhibits

Table of Contents

A. Existing On-Site Wastewater System Field Inspection Report Example
B. Textural Triangle for Soil Classification
C. Minimum Isolation Distances
D. Wastewater Design Flow Rates
E. Grease Trap Design Capacities
F. Typical Grease Trap
G. Typical Two Compartment Septic Tank
H. Typical Concrete Distribution Box
I. Typical Pump Dosing Chamber/Lift Station Vault
J. Diversion Equipment for Dual Fields
K. Typical Aggregate Trench/Bed Design – Full Depth
L. Typical Aggregate Free Trench/Bed Design – Full Depth
M. Typical Aggregate Trench/Bed Design – Capping Fill
N. Typical Aggregate Free Trench/Bed Design – Capping Fill
O. Typical Low Pressure Pipe Design
P. Low Pressure Pipe Design Percolation Rates & Maximum Hole Spacing Distances
Q. Typical Elevated Sand Mound Design
R. Typical Pressure-Dosed Trench/Bed Design – Full Depth
S. Typical Pressure-Dosed Trench/Bed Design – Capping Fill
T. Typical Sand-Lined Trench/Bed Design
U. Typical Wisconsin At-Grade Design
V. Wisconsin At-Grade Design Loading Rates
W. System Information Quick Reference Guide
X. Septic Tank Lift Station
Y. Percolation Rates Based Upon USDA Soil Textures
Z. Observation Well Construction Diagram
AA. System Abandonment Report
BB. Peat System Design Loading Rates
CC. Micro-Irrigation “Drip” Design Loading Rates
DD. Micro-irrigation “Drip” Dispersal Installation Methods
EE. Innovative/Alternative Product Approval Checklist
FF. Lot Clearing/Disturbed Site Inspection Report
GG. Crop Nutrient Uptake Websites
HH. Cumulative Metal Loading Limit for Spray Irrigation Systems
II. Monthly Average Daylight Hours for Thornthwaite Potential Evapotranspiration
JJ. Climatological Normal Temperature (Ta) & Thornthwaite Potential Evapotranspiration
KK. Climatological Normal Precipitation (P) & 5 Year Return Monthly Precipitation (P5)
LL. Minimum Treatment Requirements for Large Systems
MM. On-Site Wastewater Treatment and Disposal System Performance Standards
NN. Chesapeake Bay 1,000 Foot Enforcement Zone

GROUND WATER DISCHARGES SECTION
EXISTING ON-SITE WASTEWATER SYSTEM FIELD INSPECTION REPORT

Inspection Request Received From

Name: _____ Mailing Address: _____
Telephone #: _____ City, State, Zip: _____

Owner (if different)

Name: _____ Mailing Address: _____
Telephone #: _____ City, State, Zip: _____

Property
ZONING CERTIFICATE MANDATORY

Tax Map #: _____ Type of Structure: ____ Single Family Dwelling
Subdivision (if appl): _____ ____ Multi-Family
City, State, Zip: _____ ____ Community/Large
Physical Address: _____ ____ Commercial

Age of Structure: _____ # of Bedrooms: _____ # of Residents: _____

Occupied: ___ Yes ___ No Length of Vacancy: ____ Weeks ____ Months ___ N/A if occupied

Permit / System

Permit Available: ____ Yes ____ No Permit #: _____
Age of System: _____

System Type: ___ Full Depth Gravity ___ Full Depth LPP ___ Elevated Sand Mound
___ Capping Fill Gravity ___ Capping Fill LPP ___ Micro Drip Irrigation
___ Full Depth Pressure Dosed ___ Alternative System* ___ Seepage Pit
___ Capping Fill Pressure Dosed ___ Wisconsin at Grade ___ Cesspool

* All Innovative/Alternative systems including Advanced Treatment Unit's (ATU's) and alternative drainfield systems may only be inspected by a Class H licensee that has been certified through DNREC approved training for that ATU or alternative drainfield system. Proof of certification must be submitted to DNREC. **A Class H license alone is not adequate enough for this task.**

General Information

Pump Out
Date of Last Pump Out: _____
Pumping Frequency: _____

Repairs
Repairs made to system? ____ Yes ____ No
Was repair permit issued? ____ Yes ____ No
Details _____

Name of System Maintainer
_____

Water Service
____ Central Water ____ On-Site Well

Is this a second opinion inspection? ____ Yes ____ No
Is there a water treatment system discharging into the systems? ____ Yes ____ No
Does grey water discharges somewhere other than the septic system? ____ Yes ____ No
If yes, location _____

Information Verification

I attest this information I have provided is true and accurate to the best of my knowledge

_____ _____
Owner's/Requestor's Signature Date

For Kent & New Castle Counties - 89 Kings Highway, Dover, DE 19901 - (302) 739-9947 Tel / (302) 739-7764 Fax
For Sussex County - 20653 DuPont Blvd, Unit 5, Georgetown, DE 19947 - (302) 856-4561 Tel / (302) 856-5088 Fax

GROUND WATER DISCHARGES SECTION
EXISTING ON-SITE WASTEWATER SYSTEM FIELD INSPECTION REPORT

Inspection Data

Date: _____

Site Condition: ___ Dry _____ Wet Recent Heavy Precipitation? _____ Yes _____ No

Weather: _____ Sunny _____ Cloudy _____ Rain _____ Snow

Is there evidence that sewage has backed up into the structure? _____ Yes _____ No

Do trees or tree roots appear to interfere with the system? _____ Yes _____ No

Is there evidence or documentation of wastewater surfacing? _____ Yes _____ No

Is any portion of the system below a deck, driveway, walkway, etc.? _____ Yes _____ No

Was a visual inspection under the home for grey water performed? _____ Yes _____ No _____ No Access

Was a flow test from each household fixture performed? _____ Yes _____ No _____ No Access

Treatment Tank(s)
** PUMP OUT MANDATORY **

___ Septic Tank Capacity (gal) * _____ # of Compartments _____
Material ** _____ Dimensions ___ x _____ x _____

___ Cesspool Capacity (gal) * _____ # of Compartments _____
Material ** _____ Dimensions ___ x _____ x _____

___ Other Capacity (gal) * _____ # of Compartments _____
Material ** _____ Dimensions ___ x _____ x _____

Scum Thickness _____ ” Sludge Thickness _____”

** Round: D” X D” / 292.5 X H”* *Rectangular: L” X W” / 231 X H”* *** Specify Concrete, Metal, Other*

	S	SWC	U
Tank	__	_____	_____
Top/Lids/Risers (if appl)	__	_____	_____
Baffles	__	_____	_____

	S	SWC	U
Liquid Level (Tank)	_____	_____	_____
Effluent Filter ____ N/A	_____	_____	_____

Name of pump company_____ Date of pump out_____

*** PUMPOUT DOCUMENTATION MAY BE REQUIRED ***

Does effluent from the absorption facility run back to the treatment tank? _____ Yes _____ No

Is there evidence of effluent surfacing above the treatment tank(s)? _____ Yes _____ No

S = Satisfactory, SWC = Satisfactory With Concerns, U = Unsatisfactory

For Kent & New Castle Counties - 89 Kings Highway, Dover, DE 19901 - (302) 739-9947 Tel / (302) 739-7764 Fax
For Sussex County - 20653 DuPont Blvd, Unit 5, Georgetown, DE 19947 - (302) 856-4561 Tel / (302) 856-5088 Fax

GROUND WATER DISCHARGES SECTION
EXISTING ON-SITE WASTEWATER SYSTEM FIELD INSPECTION REPORT

Distribution System

	S	SWC	U		S	SWC	U
Distribution Box (if Existing)	___	_____	____	Liquid Level (D-Box)	_____	_____	_____
Diversion Box (if Existing)	___	_____	____	Liquid Level (Div-Box)	_____	_____	_____
Distribution Piping	___	_____	____	Top/Lid	_____	_____	_____
Baffles	___	_____	____				

S = Satisfactory, SWC = Satisfactory With Concerns, U = Unsatisfactory

Distribution Box level, allowing equal distribution?	_____ Yes	_____ No	_____ N/A
Is effluent above the lateral inverts in the distribution box?	_____ Yes	_____ No	_____ N/A
Does effluent from the absorption facility run back to the D-Box?	_____ Yes	_____ No	_____ N/A
Is there evidence of effluent surfacing above the D-Box?	_____ Yes	_____ No	_____ N/A

Distribution Box Capacity (gal) * _____
Material ** _____
Dimensions _____ x _____ x _____

** Round: D" X D" / 292.5 X H" Rectangular: L" X W" / 231 X H"*
*** Specify Concrete, Metal, Other*

Holding / Dosing Tank / Lift Station

____ Holding Tank ____ Lift Station ____ Dosing Tank Gallons: _____
Material: _____
Dimensions: _____ x _____ x _____

	S	SWC	U		S	SWC	U
Tank	____	_____	_____	Electrical Connections	_____	_____	_____
Top/Lids/Risers (if appl)	____	_____	_____	Timer ____ N/A	_____	_____	_____
Pump/Siphon Operat.	____	_____	_____	Check Valve & Weep Hole	_____	_____	_____
Alarm	____	_____	_____	Pump Elev. Off Tank Floor	_____	_____	_____
Vent Pipe	____	_____	_____				

S = Satisfactory, SWC = Satisfactory With Concerns, U = Unsatisfactory

Accumulated solids found in pump tank?	_____ Yes	_____ No
Is alarm on separate circuit?	_____ Yes	_____ No
Infiltration of surface waters?	_____ Yes	_____ No

For Kent & New Castle Counties - 89 Kings Highway, Dover, DE 19901 - (302) 739-9947 Tel / (302) 739-7764 Fax
For Sussex County - 20653 DuPont Blvd, Unit 5, Georgetown, DE 19947 - (302) 856-4561 Tel / (302) 856-5088 Fax

GROUND WATER DISCHARGES SECTION
EXISTING ON-SITE WASTEWATER SYSTEM FIELD INSPECTION REPORT

Absorption Facility

Located: _____ Yes _____ No More than one absorption facility: _____ Yes ____ No

How Many: _____ Total Sq Ft: _____

_____ Bed _____ x _____ (approx. size) = _____ Sq Ft
_____ Trenches _____ x _____ (approx. size) = _____ Sq Ft # of Trenches _____
_____ Seepage Pit _____ x _____ (approx. size) = _____ Sq Ft
_____ Cesspool _____ x _____ (approx. size) = _____ Sq Ft
_____ Other (describe) _____

Are there signs of previous absorption facility failure? ____ Yes _____ No
Are there any overflow lines? ____ Yes _____ No

Summary of System Component Inspections
Review "Overall Comments" for Summary of Ratings

	Satisfactory	Satisfactory With Concerns	Unsatisfactory
Treatment Tank(s)	_____	____	____
Holding/Dosing Tank/Lift Station	_____	____	____
Absorption Facility(ies)	_____	____	____
Distribution System	_____	____	____

Overall Comments (use additional paper if needed)
Include Comments for Satisfactory with Concerns & Unsatisfactory Ratings

_____
_____
_____
_____
_____
_____
_____
_____
_____
_____
_____
_____
_____

Inspector

Name: _____ License #: _____
Telephone #: _____
Signature: _____ Date: _____

For Kent & New Castle Counties - 89 Kings Highway, Dover, DE 19901 - (302) 739-9947 Tel / (302) 739-7764 Fax
For Sussex County - 20653 DuPont Blvd, Unit 5, Georgetown, DE 19947 - (302) 856-4561 Tel / (302) 856-5088 Fax

GROUND WATER DISCHARGES SECTION
EXISTING ON-SITE WASTEWATER SYSTEM FIELD INSPECTION REPORT

Scale Drawing of On-Site Wastewater Treatment & Disposal System Location or Attach Existing Permitted Plot Drawing

Scale
1”=_____’

North

- A site drawing to scale, straight edge must be used (no free-hand lines), must show a reference point such as numbered utility pole, telephone or electrical box, building(s), property corners or fixed survey markers, or GPS coordinates. A minimum of two (2) such reference points should be noted on the site sketch. Site sketch(es) shall be based on a whole number scale not to exceed 1 inch equals 100 feet. Acceptable scales are: 1 inch = 10, 20, 30, 40, 50, 60, or 100 feet.
- A north directional arrow.
- Indicate location of central water line or onsite well. All onsite wells must be measured from two (2) reference points or established survey control.
- Identify each wastewater treatment and disposal system component.
- Mark distances from fixed reference points (i.e. property corners, existing dwelling, etc.) or established survey control points for each wastewater treatment and disposal system component.
- Should an existing approved permit drawing be available the drawing maybe used, but the inspector must either note on the drawing that “no changes were found” or clearly mark all the changes on the permit drawing.

For Kent & New Castle Counties - 89 Kings Highway, Dover, DE 19901 - (302) 739-9947 Tel / (302) 739-7764 Fax
For Sussex County - 20653 DuPont Blvd, Unit 5, Georgetown, DE 19947 - (302) 856-4561 Tel / (302) 856-5088 Fax

GUIDE FOR TEXTURAL CLASSIFICATION

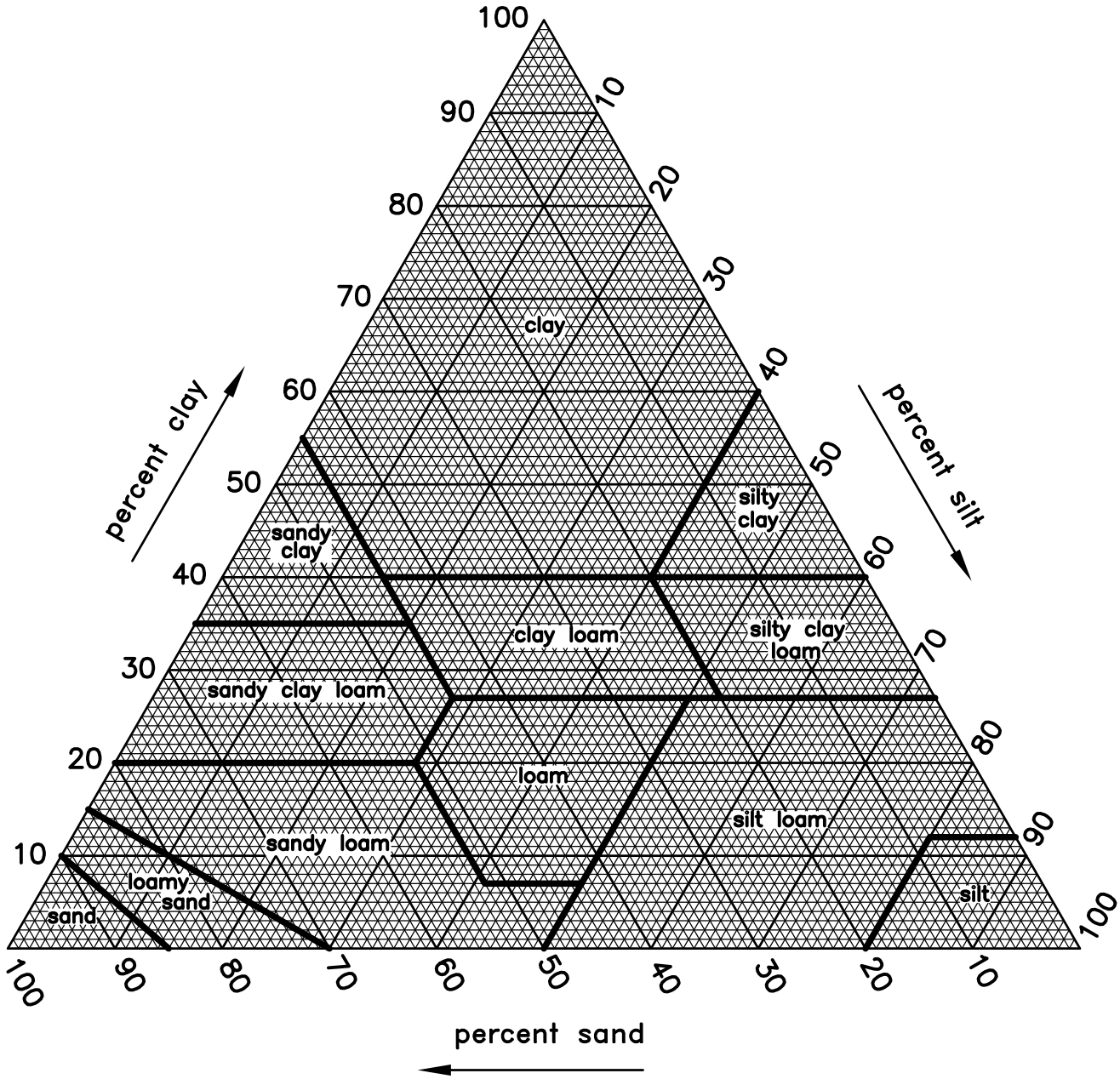

STATE OF DELAWARE
DEPARTMENT OF NATURAL RESOURCES AND ENVIRONMENTAL CONTROL

TEXTURAL TRIANGLE
FOR
SOIL CLASSIFICATION

ISSUED: JANUARY 1985
REVISED: JANUARY 2014

EXHIBIT - B

MINIMUM ISOLATION DISTANCES (FEET) FOR SMALL SYSTEMS

Components	Well	Water Supply Pressure Line	Watercourse	Dwellings and Property Lines	Other active on-lot systems	Top of Bank or Escarpment >25%
Septic tank Grease trap Distribution box Dosing chamber Diversion valve or box Advanced treatment unit	50	10	25	10 f	--	--
Disposal area	100 a, c, d, e, h, i	10	100 b	10 g	10	15

MINIMUM ISOLATION DISTANCES (FEET) FOR LARGE SYSTEMS

Components	Well	Water Supply Pressure Line	Watercourse	Dwellings & Property Lines	Other active on-lot systems	Top of Bank or Escarpment >25%
Spray field	100 d	10	100 j, k	150 k	10	--
Rapid Infiltration Basin	100 a, c, d, e	10	100 b	50 g	10	15
Treatment plant	10 d	10	10	10	--	--
Disposal area	100 a, c, d, e	10	100 b	50 g	10	15

NOTE: These isolation distances satisfy the requirements of the Ground Water Discharges Section and these regulations; however, County Codes and Pollution Control Strategies associated with Total Maximum Daily Load regulations may be more stringent.

Notes:

a) Approval of a lesser distance to a minimum isolation distance of 50 feet may be approved by the Department as per the Delaware Regulations Governing the Construction and Use of Wells. The applicant shall provide documentation regarding well distances, depths, and construction to the Department upon request.

b) Approval of a lesser distance to a minimum isolation of fifty (50) feet may be approved by the Department if the watercourse has not been designated for use as a public water supply or shellfish. There is no setback from an ephemeral watercourse. It is the sole responsibility of the Class D soil scientist to determine whether a watercourse, by definition, is ephemeral.

c) For elevated sand mound and capping fill systems, distances shall be measured from the outer edge of the stone or gravel-less chamber. RIB's are measured from inside edge of berm.

d) For public or industrial wells the minimum isolation distance shall be 150 feet.

e) For replacement systems on lots created by plat or deed and recorded prior to April 8, 1984, an isolation distance of fifty (50) feet between domestic wells and absorption facility may be considered by the Department where the lot size will not allow an isolation distance of 100 feet. The well must be cased to a depth of forty two (42) feet, exclusive of the screen, and pressure-grouted with either concrete or bentonite clay to a minimum depth of forty (40) feet. The applicant shall provide documentation regarding well distances, depths, and construction to the Department upon request.

f) Except in the case of a septic tank for a central sewer system where the absorption facility is not located on the same lot as the septic tank, in which case the distance shall be five (5) feet from the interior lot or easement lines within a recorded subdivision.

g) Except in the case of a central sewer system where the absorption facility can be five (5) feet from an interior lot or easement lines within a recorded subdivision.

h) For replacement systems, the well isolation distance may be reduced from 100 feet to a minimum of 50 feet. (maximizing the distance) if and additional twelve (12) inches of suitable soil exists below or is added to (i.e. ESM). (i.e. 36 inch separation for gravity systems to 48 inch separation for well isolation reduction).

i) The Department may reduce the well isolation distance from 100 feet to a minimum of 50 feet (maximizing the distance) if advanced treatment is incorporated.

j) If effluent is treated to "Unlimited" access levels the well isolation distance may be reduced from 100 feet to 50 feet

k) This includes the shoulder of internal and external roads or edge of the roadway if no shoulder is present.

TYPE OF ESTABLISHMENT	UNIT	GALLONS/UNIT/DAY
Airport	Person	5
Assembly Hall, Auditoriums, Indoor Theaters	Seat	3
Banquet Halls/Fire Halls/Community Centers	Seat	15
With bar & food	Seat	30
Barber Shop	Chair	50
Bar with minimum food prep	Seat	20
Bath House	Person	10
Beauty Shop	Chair	125
Boarding or rooming houses	Person	50
Staff	Person	15
Bowling Alley with no bar or restaurant	Lane	100
With bar or restaurant	Lane	200
Camps		
Work	Person	40
Summer	Person	40
Trailer without sewer hook-up	Site	50
Trailer with sewer hook-up	Site	75
Churches	Seat	5
Country Clubs	Person	100
Day Care	Child	10
Day Care Staff add	Person	15
Dentist Office	Chair	100
Office Staff add	Person	20
Dog Kennel	Dog	10
Factories	Person	25
with shower	Person	35
Hospitals	Bed	250+
Hotels	Room	120

STATE OF DELAWARE
DEPARTMENT OF NATURAL RESOURCES AND ENVIRONMENTAL CONTROL

WASTEWATER DESIGN FLOW RATES

ISSUED: JANUARY 1985
REVISED: JANUARY 2014

EXHIBIT - D
(Sheet 1 of 3)

TYPE OF ESTABLISHMENT	UNIT	GALLONS/UNIT/DAY
Laundromat	Machine	500
Marinas	Boat Slip	10
Marinas with restrooms	Boat Slip	30
Motels	Room	100
with kitchen	Room	150
Medical office buildings and clinics	Persons	
Doctors, nurses and medical staff		70
Office staff		20
Patients		7
Offices	Employee	20
Outdoor sporting facilities	Persons per day	5
Parks with beaches		
Lavatory waste only	Person	5
Bath house, showers, lavatories	Person	13
Picnic Grounds, Public Swimming Pools		
Picnic with toilets only	Person	5
Picnic with lavatories and showers	Person	11
Swimming Pools and Beaches with lavatories and showers	Person	13
Residential Dwellings	Bedroom	120
Restaurants	Seat	
24 hour service		40
18 hour service		30
12 hour service		20
Add for bars & cocktail lounges		5
Rest/Nursing/Assisted Living Homes	Bed	100

TYPE OF ESTABLISHMENT	UNIT	GALLONS/UNIT/DAY
Schools	Student	10
with gym, showers, cafeteria	Student	25
with cafeteria	Student	15
Boarding	Student	75
Non-resident staff	Staff	15
Service Station	Pump	50
with convenience store	Sq. ft.	0.1
Stores (Retail)	Sq. ft.	0.1
Theaters		
Drive-in	Space	10
Movie Theaters	Seat	4
Veterinarian	Patient	10

GREASE TRAP DESIGN CAPACITIES

TYPE OF FIXTURE	FLOW RATE (GPM)	GREASE RETENTION CAPACITY (LB)	REQUIRED CAPACITY PER FIXTURE CONNECTED TO TRAP (GAL)
Restaurant kitchen sink	15	30	50
Single-compartment sink	20	40	50
Double-compartment sink	25	50	62.5
Triple-compartment sink	30	60	75
2 single-compartment sinks	25	50	62.5
2 triple-compartment sinks	40	80	100
Dishwasher for restaurants			
Up to 30 gallons of water	15	30	50
Up to 50 gallons of water	25	50	62.5
50 to 100 gallons of water	40	80	100

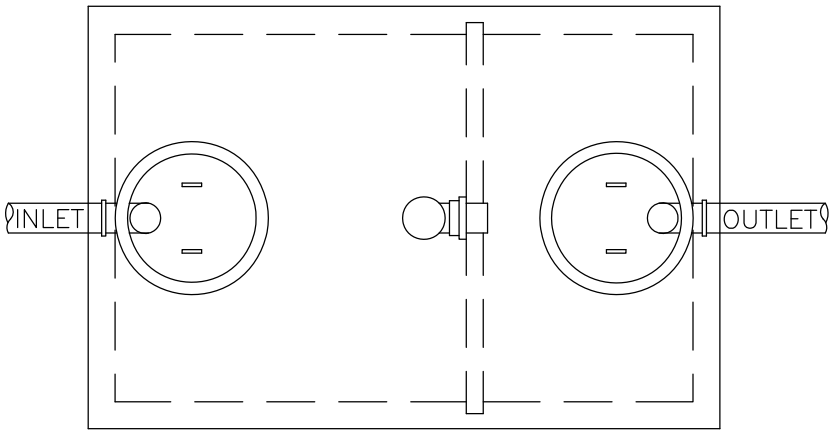

PLAN

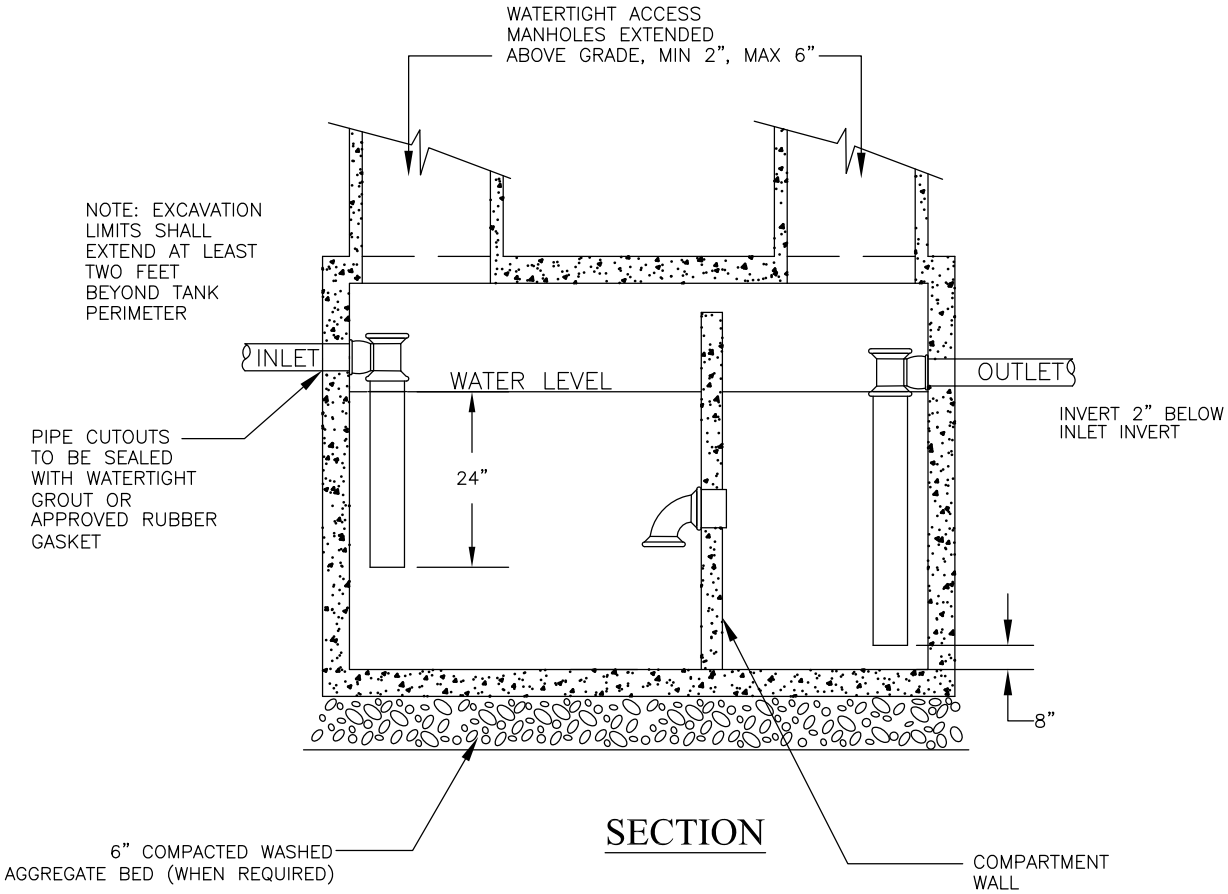

SECTION

STATE OF DELAWARE

DEPARTMENT OF NATURAL RESOURCES AND ENVIRONMENTAL CONTROL

TYPICAL GREASE TRAP

(NOT TO SCALE)

ISSUED: JANUARY 1985

REVISED: JANUARY 2014

EXHIBIT - F

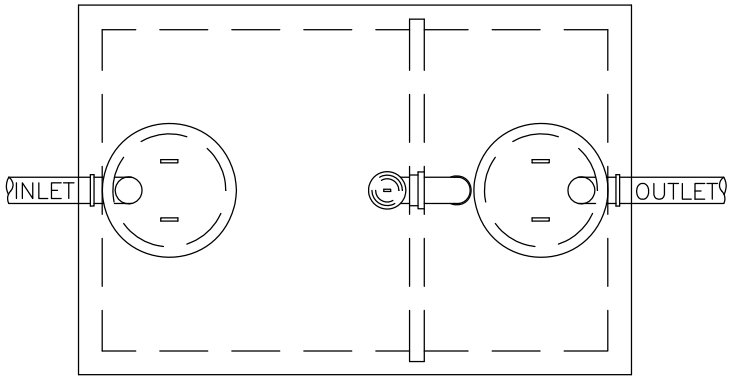

PLAN

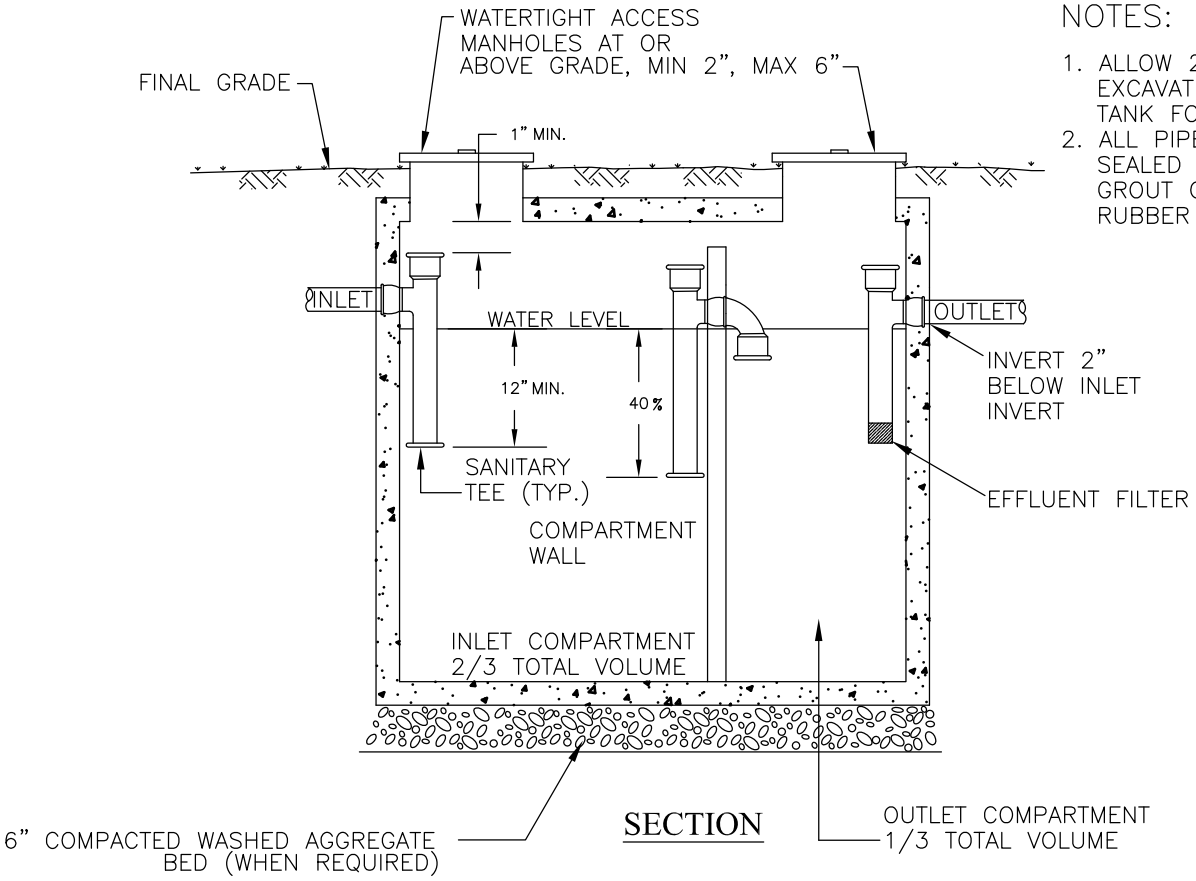

SECTION

NOTES:

1. ALLOW 2' CLEARANCE IN EXCAVATION AROUND TANK FOR TAMPING.
2. ALL PIPE CUTOUTS TO BE SEALED WITH WATERTIGHT GROUT OR APPROVED RUBBER GASKET.

STATE OF DELAWARE

DEPARTMENT OF NATURAL RESOURCES AND ENVIRONMENTAL CONTROL

TYPICAL TWO-COMPARTMENT SEPTIC TANK

ISSUED: JANUARY 1985

REVISED: JANUARY 2014

EXHIBIT - G

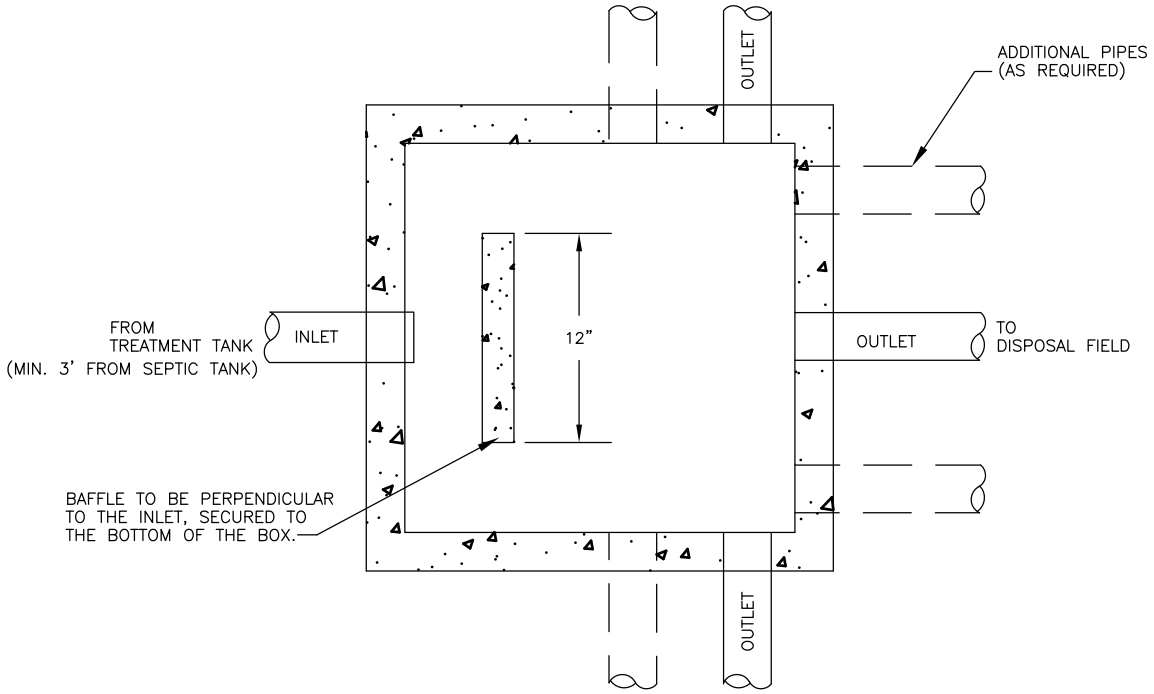

PLAN

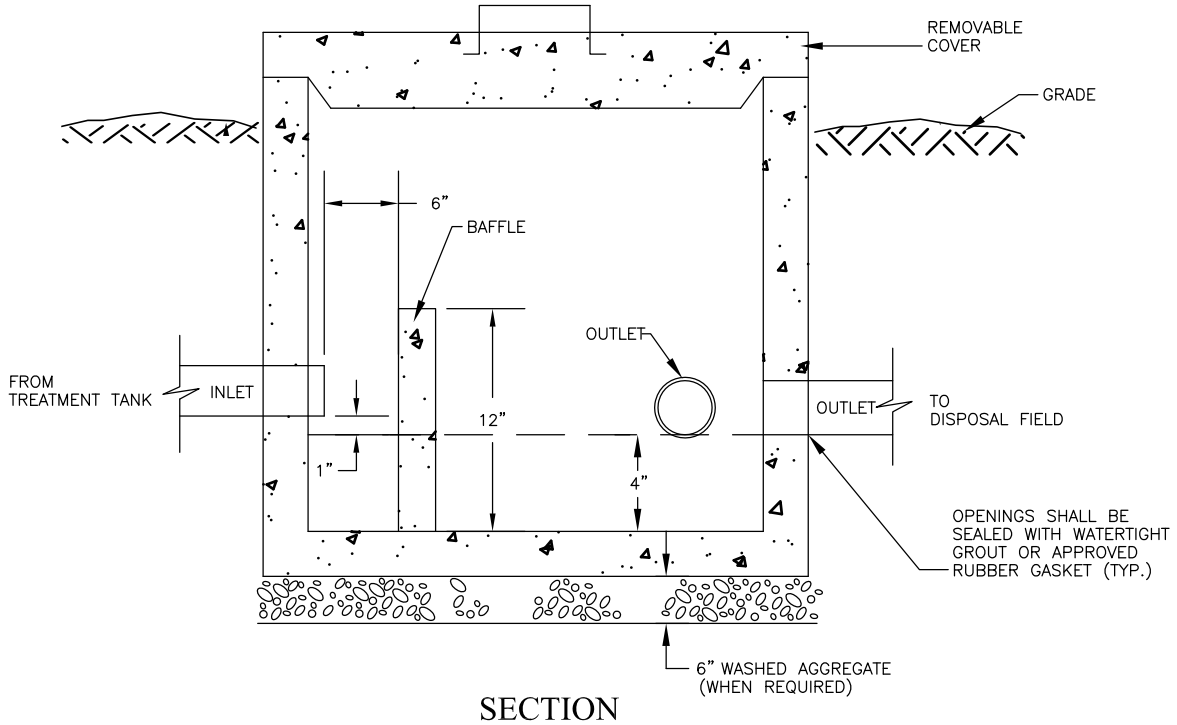

SECTION

STATE OF DELAWARE

DEPARTMENT OF NATURAL RESOURCES
AND ENVIRONMENTAL CONTROL

TYPICAL CONCRETE DISTRIBUTION BOX

(NOT TO SCALE)

ISSUED: JANUARY 1985

REVISED: JANUARY 2014

EXHIBIT - H

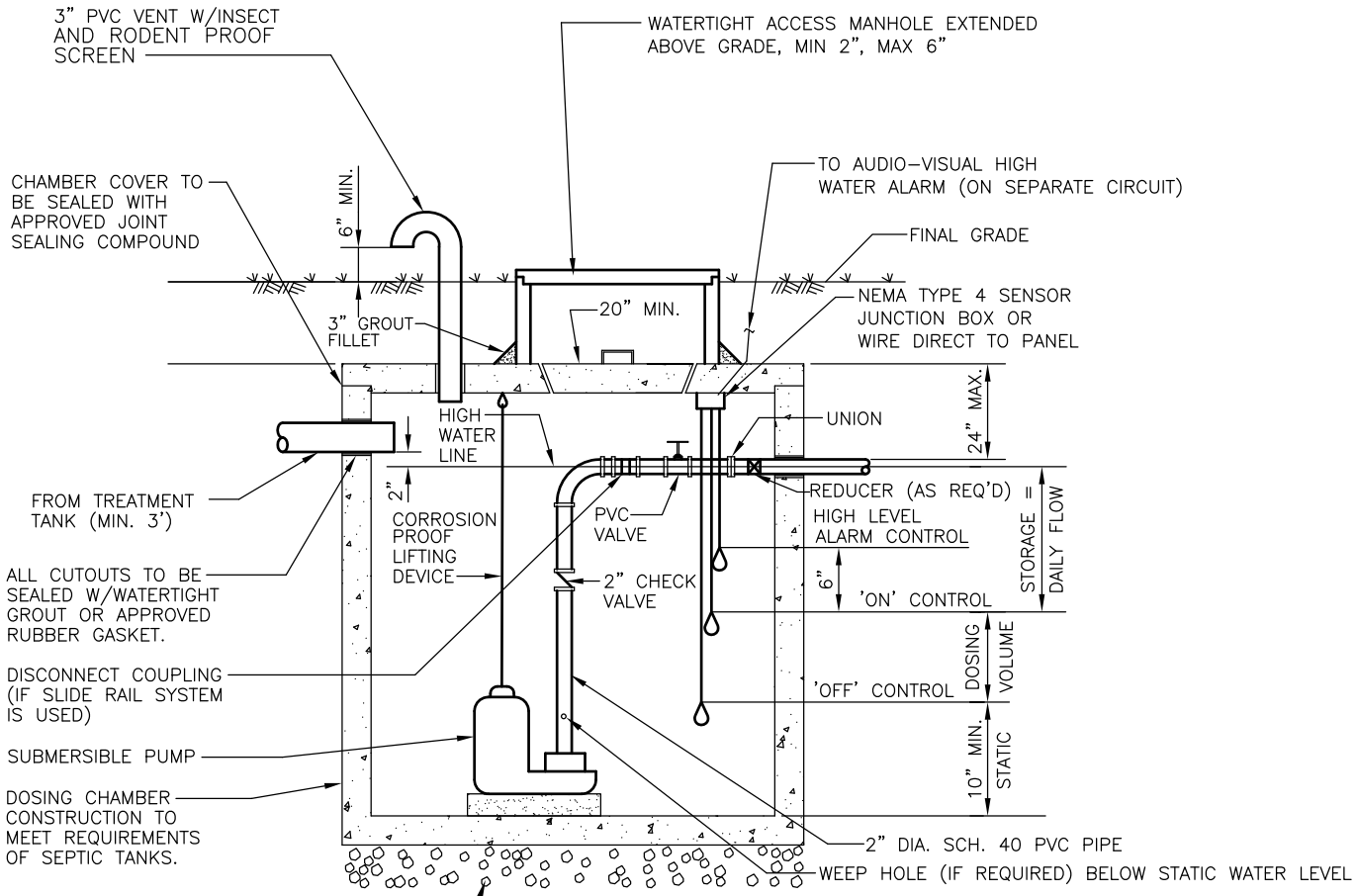

NOTE:
ADJUST PVC GATE VALVE FOR MINIMUM 2.31' ORIFICE HEAD. FLOATS ARE NOT TO BE LOCATED DIRECTLY BELOW INLET.

SECTION

NOTES:

1. MAXIMUM DEPTH FROM GRADE TO INVERT OF DOSING CHAMBER TO BE 9'-0".
2. EXCAVATION LIMITS SHALL EXTEND AT LEAST 2 FEET BEYOND TANK PERIMETER.
3. ALL PIPE TO BE PVC SCHEDULE 40.
4. CHAMBER TO BE SIZED ACCORDING TO REQUIREMENTS OF DOSING VOLUME AND STORAGE.
5. ALL DOSING CHAMBER COMPONENTS SHALL BE FIELD TESTED TO ENSURE ACCURACY, WATER TIGHTNESS, AND PROPER OPERATION OF ALL PUMPS AND ALARM CONTROLS.
6. ALL ELECTRICAL CONNECTIONS SHALL BE WATERPROOF, CORROSION-RESISTANT AND EXPLOSION-PROOF. (IF INSIDE TANK)
7. WHERE POSSIBLE, PUT ALL ELECTRICAL CONNECTIONS OUTSIDE OF THE TANK.
8. RAIN TIGHT (3R) BOXES ARE REQUIRED OUTSIDE OF THE TANK: NOT EXPLOSION PROOF.
9. THE REDUCER, IF USED, CAN BE INSTALLED INSIDE OF THE TANK.

STATE OF DELAWARE
DEPARTMENT OF NATURAL RESOURCES AND ENVIRONMENTAL CONTROL

TYPICAL PUMP DOSING CHAMBER
(NOT TO SCALE)

ISSUED: JANUARY 1985
REVISED: JANUARY 2014

EXHIBIT - I
(Sheet 1 of 2)

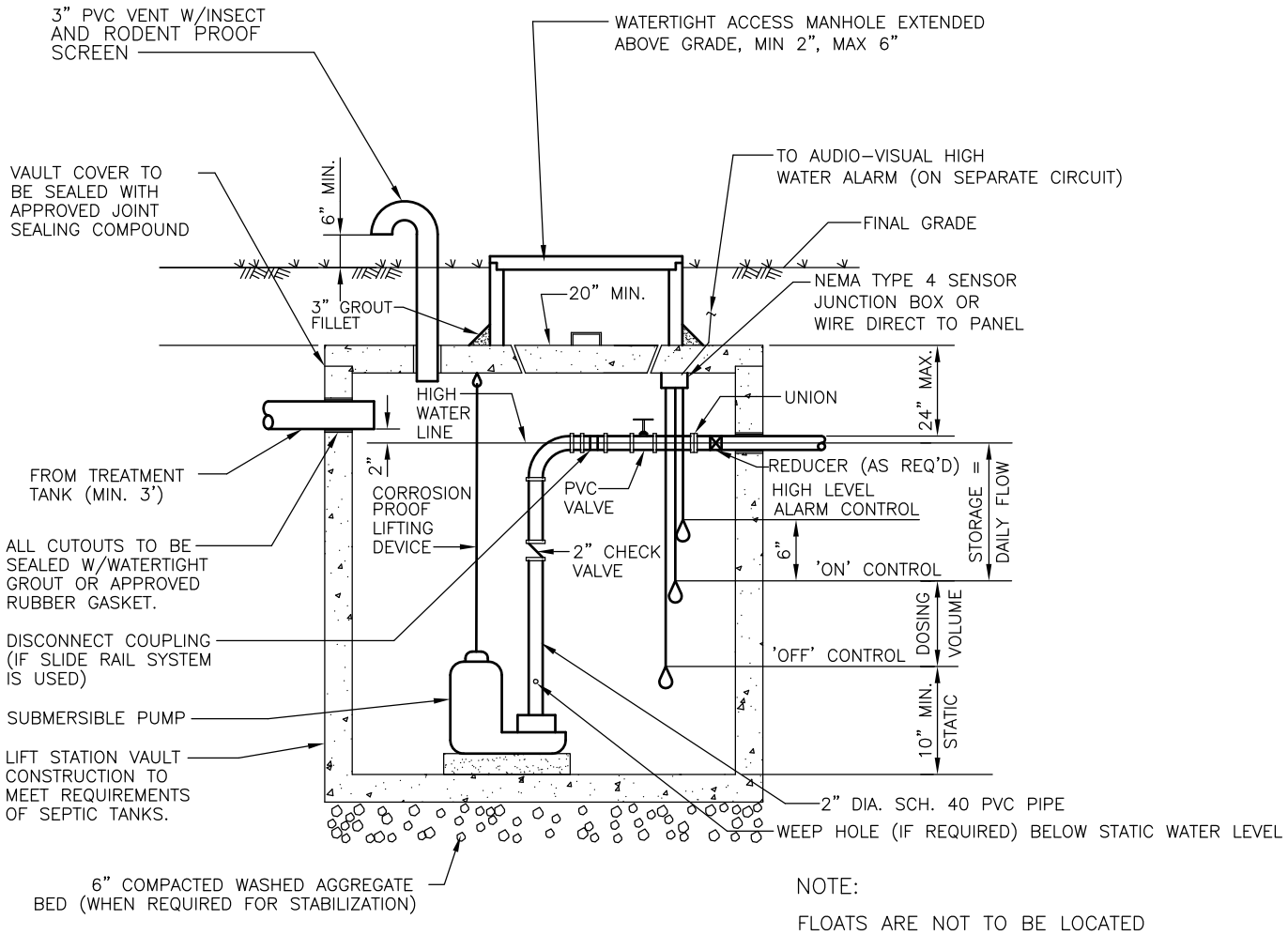

NOTE:

FLOATS ARE NOT TO BE LOCATED DIRECTLY BELOW INLET.

SECTION

NOTES:

1. MAXIMUM DEPTH FROM GRADE TO INVERT OF LIFT STATION TO BE 9'-0".
2. EXCAVATION LIMITS SHALL EXTEND AT LEAST 2 FEET BEYOND VAULT PERIMETER.
3. ALL PIPE TO BE PVC SCHEDULE 40.
4. VAULT TO BE SIZED ACCORDING TO REQUIREMENTS OF DOSING VOLUME AND STORAGE.
5. ALL LIFT STATION COMPONENTS SHALL BE FIELD TESTED TO ENSURE ACCURACY, WATER TIGHTNESS, AND PROPER OPERATION OF ALL PUMPS AND ALARM CONTROLS.
6. ALL ELECTRICAL CONNECTIONS SHALL BE WATERPROOF, CORROSION-RESISTANT AND EXPLOSION-PROOF. (IF INSIDE VAULT)
7. WHERE POSSIBLE, PUT ALL ELECTRICAL CONNECTIONS OUTSIDE OF THE VAULT.
8. RAIN TIGHT (3R) BOXES ARE REQUIRED OUTSIDE OF THE VAULT: NOT EXPLOSION PROOF.
9. THE REDUCER, IF USED, CAN BE INSTALLED INSIDE OF THE VAULT.

STATE OF DELAWARE
DEPARTMENT OF NATURAL RESOURCES AND ENVIRONMENTAL CONTROL

TYPICAL LIFT STATION VAULT
(NOT TO SCALE)

ISSUED: JANUARY 1985
REVISED: JANUARY 2014

EXHIBIT - I
(Sheet 2 of 2)

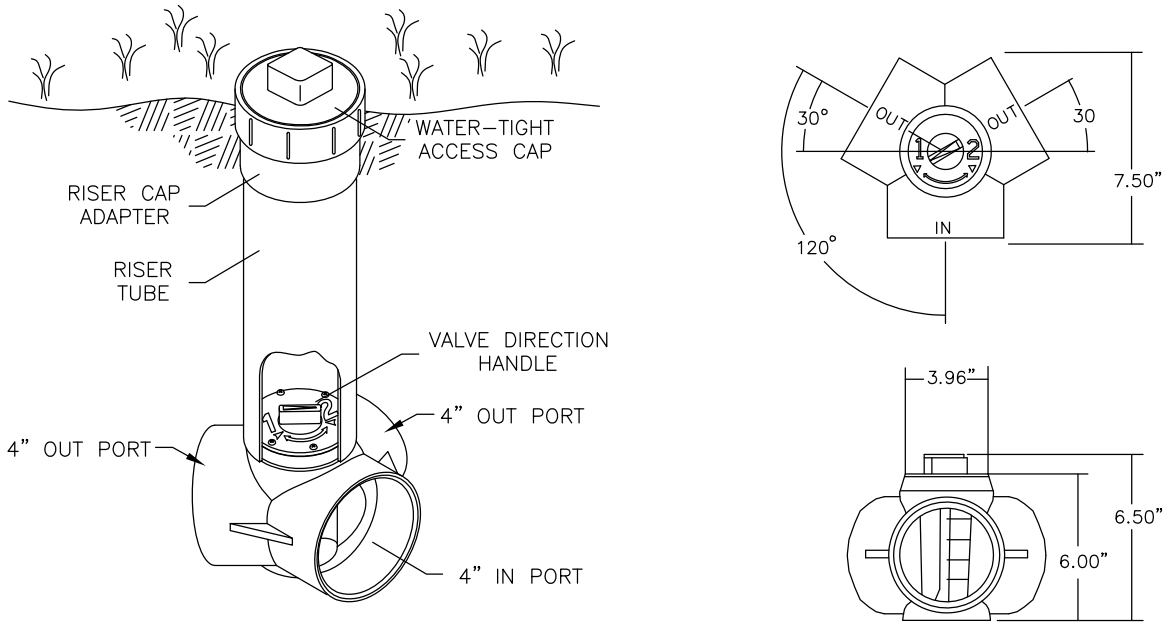

BULL RUN VALVE- (TYPICAL)

(FOR GRAVITY FLOW ONLY)

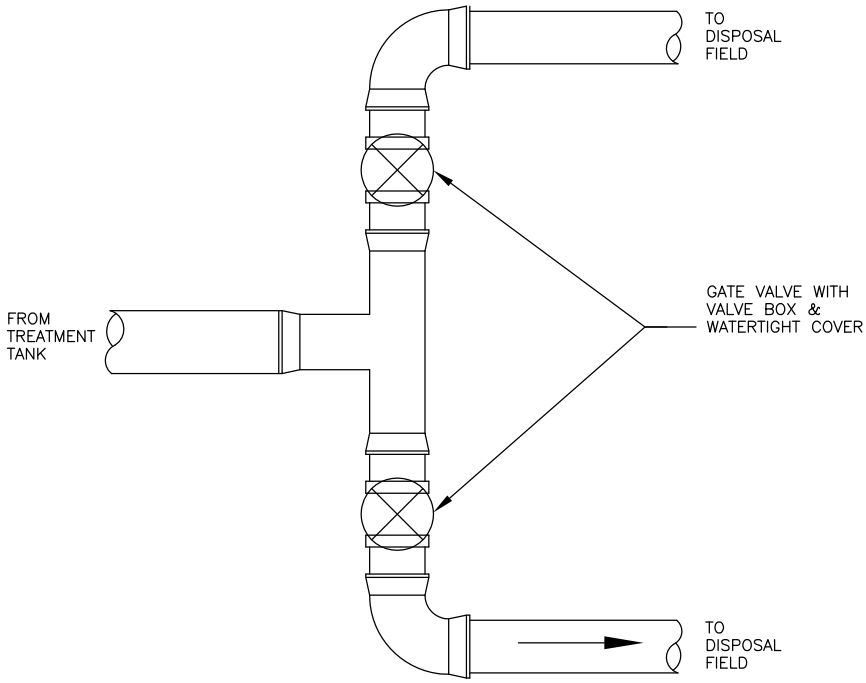

DIVERSION VALVES- (TYPICAL)

(FOR GRAVITY OR PRESSURE SYSTEM)

STATE OF DELAWARE

DEPARTMENT OF NATURAL RESOURCES
AND ENVIRONMENTAL CONTROL

DIVERSION EQUIPMENT FOR
DUAL FIELDS
(NOT TO SCALE)

ISSUED: JANUARY 1985

REVISED: JANUARY 2014

EXHIBIT - J

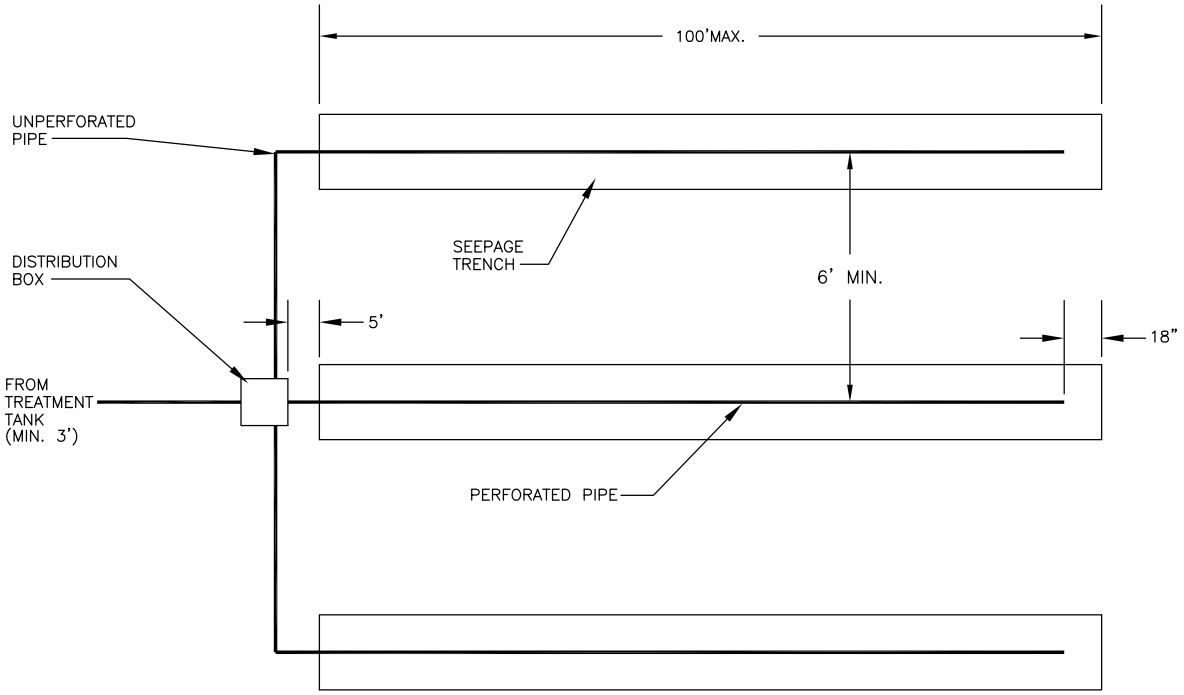

PLAN

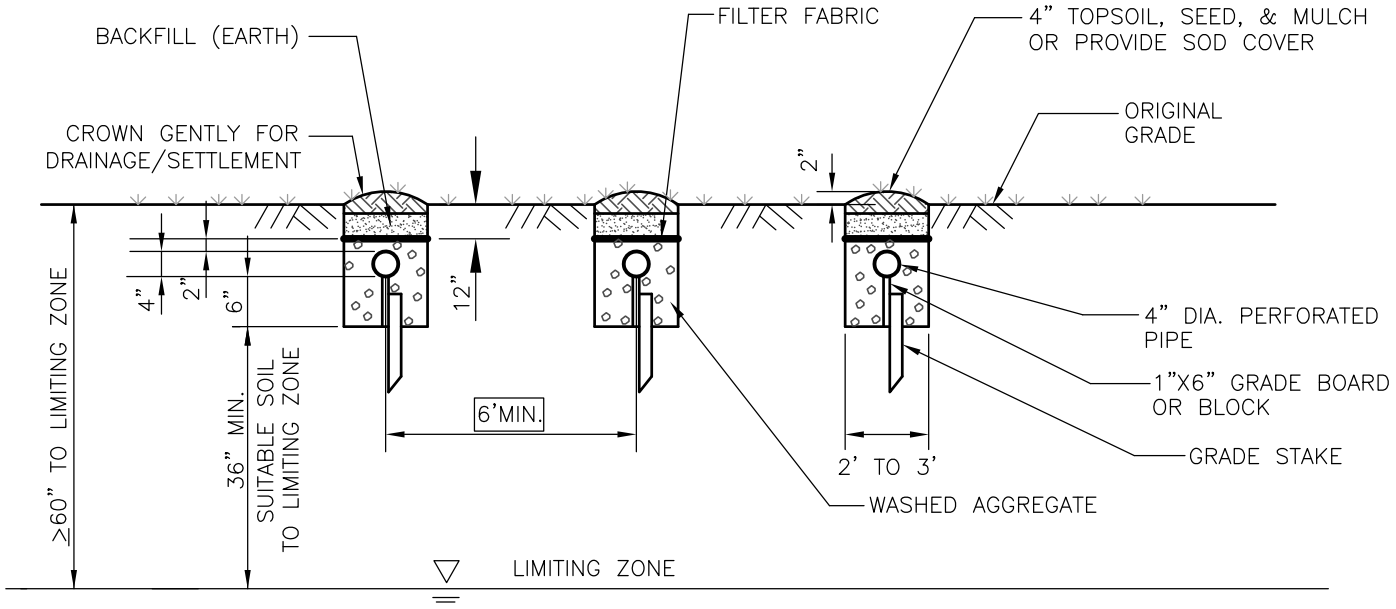

SECTION

STATE OF DELAWARE
DEPARTMENT OF NATURAL RESOURCES AND ENVIRONMENTAL CONTROL

TYPICAL AGGREGATE TRENCH DESIGN FULL DEPTH GRAVITY
(NOT TO SCALE)

ISSUED: JANUARY 1985
REVISED: JANUARY 2014

EXHIBIT - K
(Sheet 1 of 2)

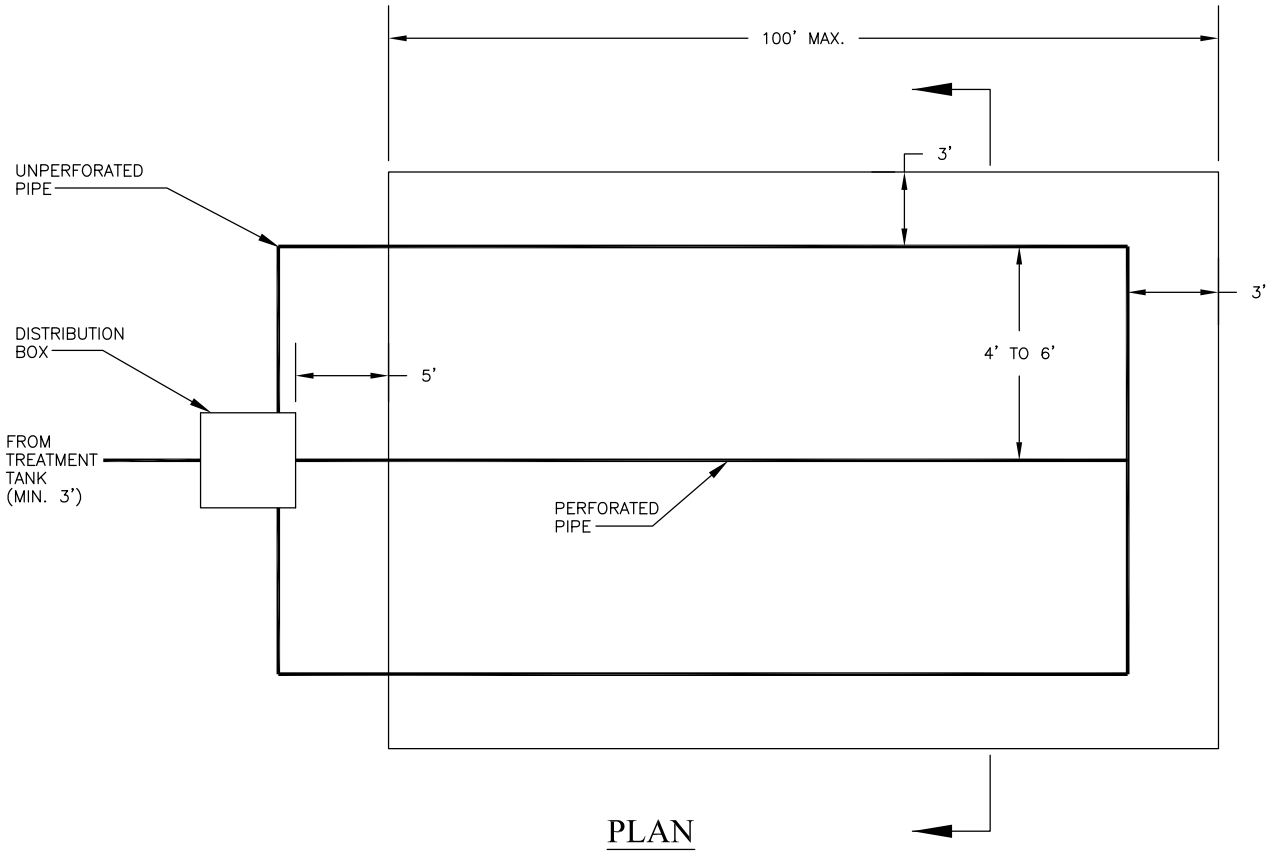

PLAN

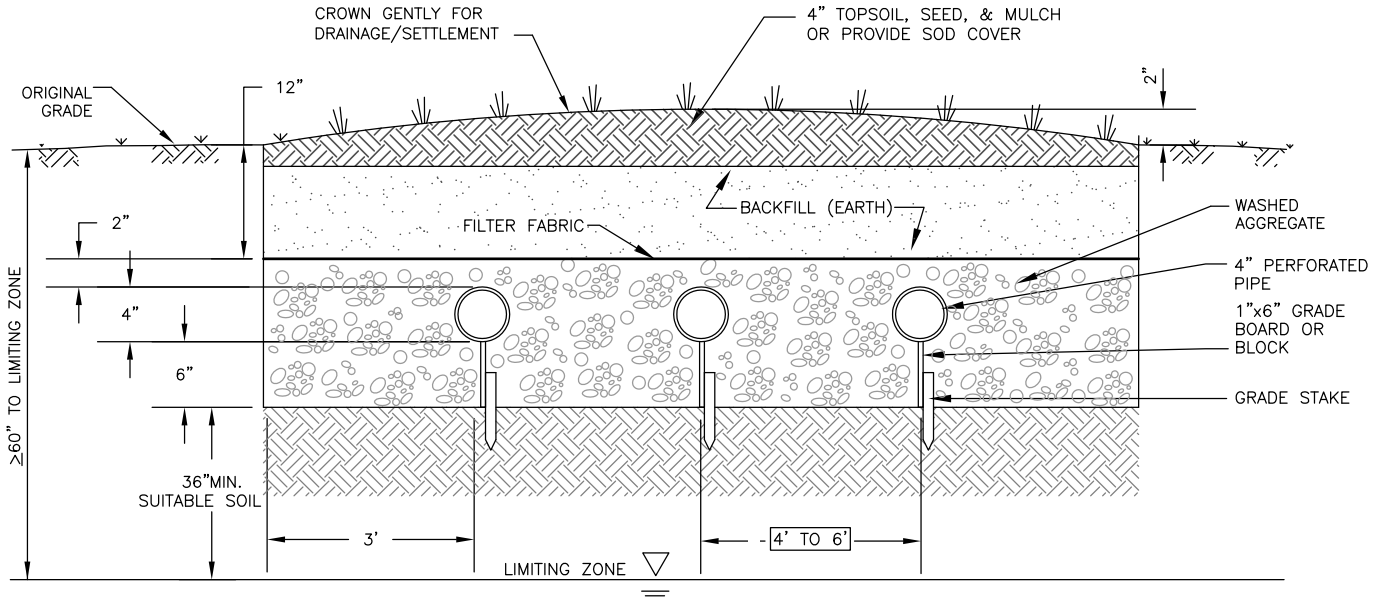

SECTION

STATE OF DELAWARE
DEPARTMENT OF NATURAL RESOURCES AND ENVIRONMENTAL CONTROL

TYPICAL AGGREGATE BED
DESIGN FULL DEPTH GRAVITY
(NOT TO SCALE)

ISSUED: JANUARY 1985
REVISED: JANUARY 2014

EXHIBIT - K
(Sheet 2 of 2)

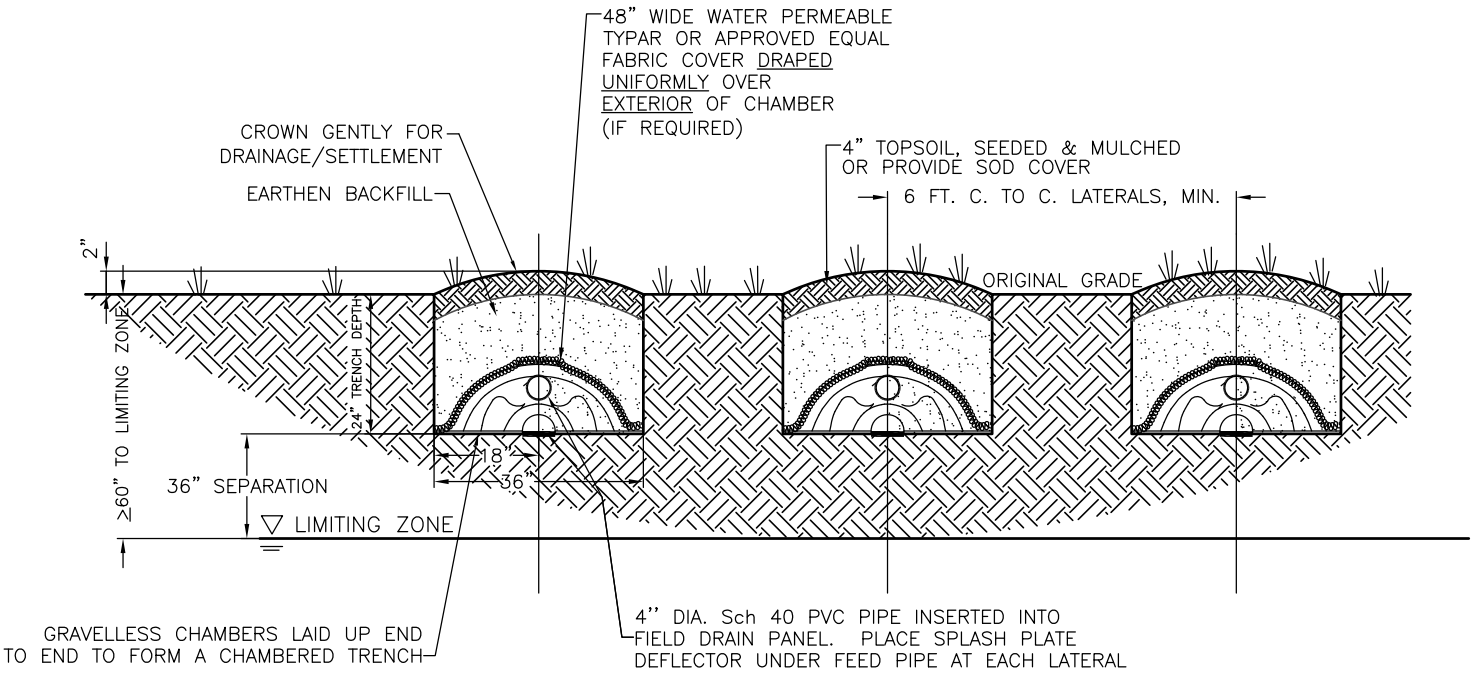

FULL DEPTH TRENCH SECTION

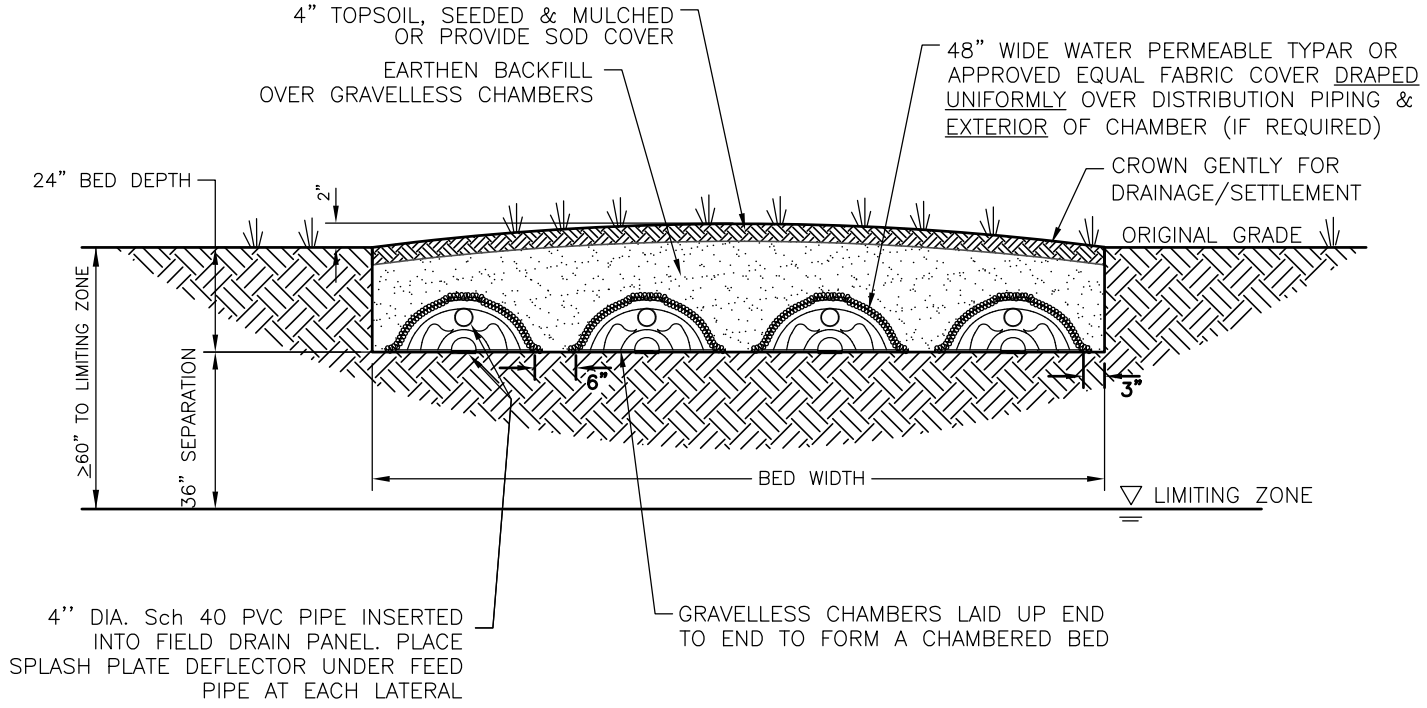

FULL DEPTH BED SECTION

STATE OF DELAWARE

DEPARTMENT OF NATURAL RESOURCES AND ENVIRONMENTAL CONTROL

TYPICAL AGGREGATE-FREE TRENCH/BED DESIGN
FULL DEPTH GRAVITY
(NOT TO SCALE)

ISSUED: JANUARY 1985
REVISED: JANUARY 2014

EXHIBIT - L

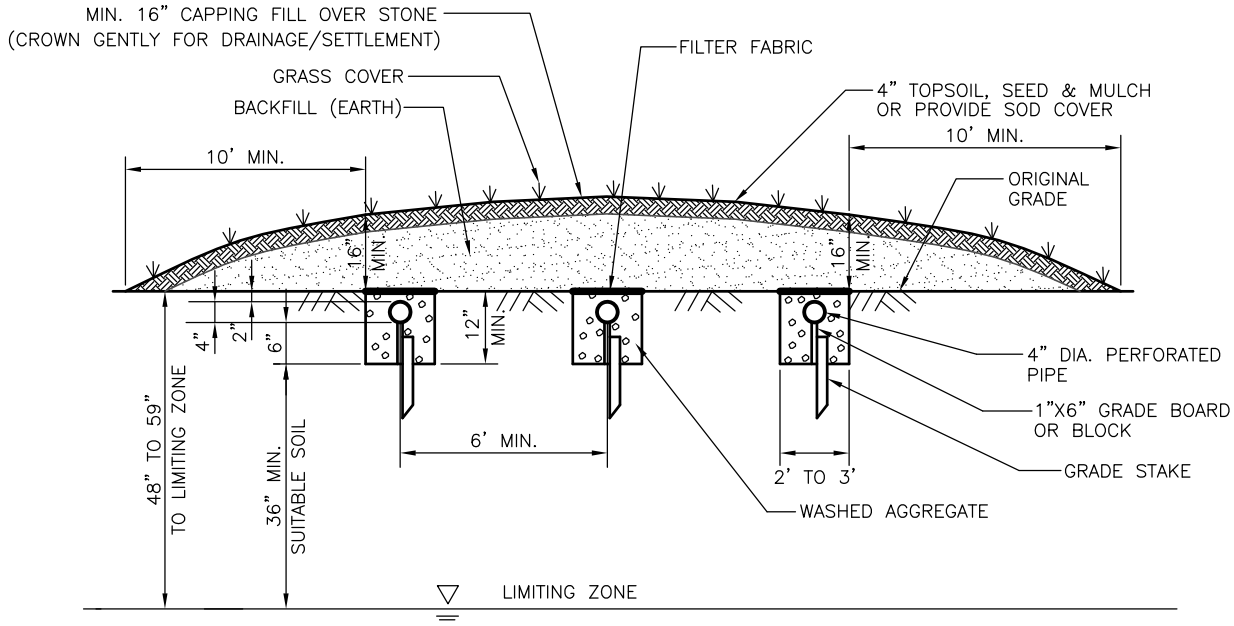

CAPPING FILL TRENCH SECTION

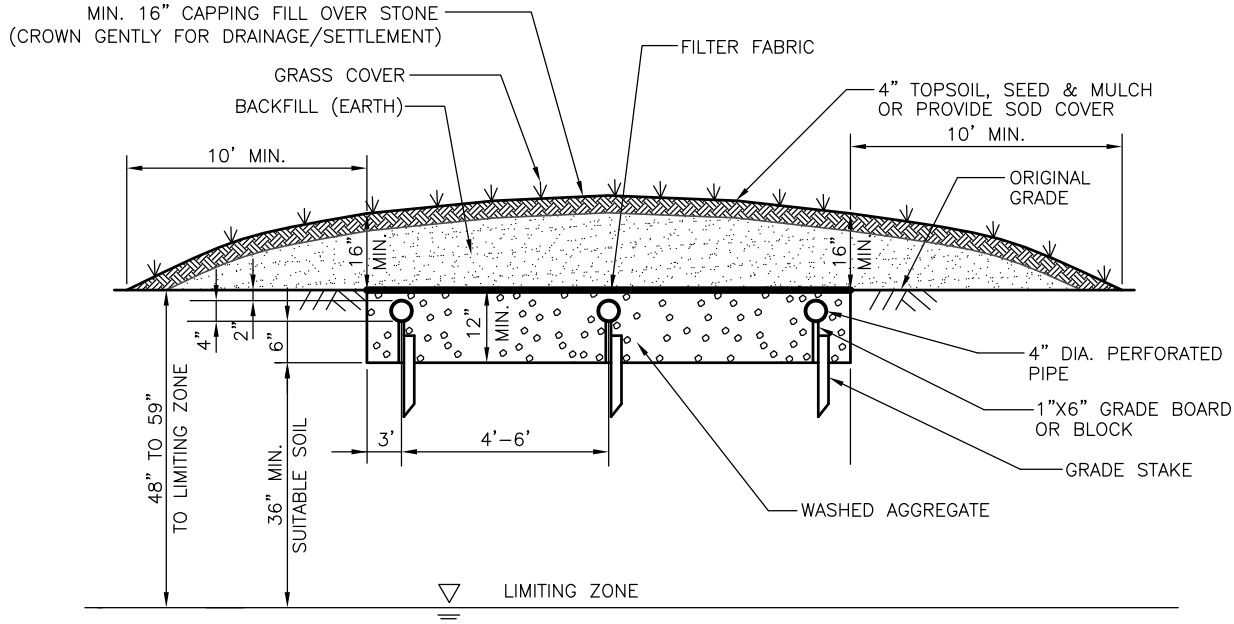

CAPPING FILL BED SECTION

STATE OF DELAWARE

DEPARTMENT OF NATURAL RESOURCES
AND ENVIRONMENTAL CONTROL

TYPICAL AGGREGATE TRENCH/BED
DESIGN- CAPPING FILL GRAVITY
(NOT TO SCALE)

ISSUED: JANUARY 1985
REVISED: JANUARY 2014

EXHIBIT - M

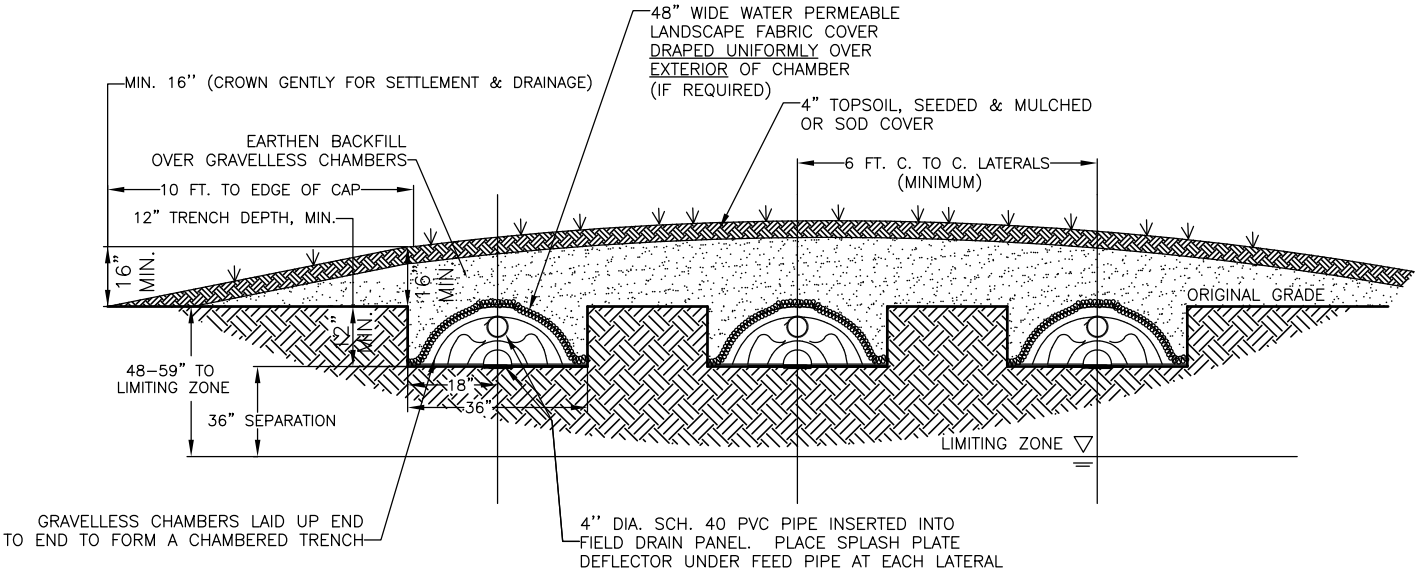

CAPPING FILL TRENCH SECTION

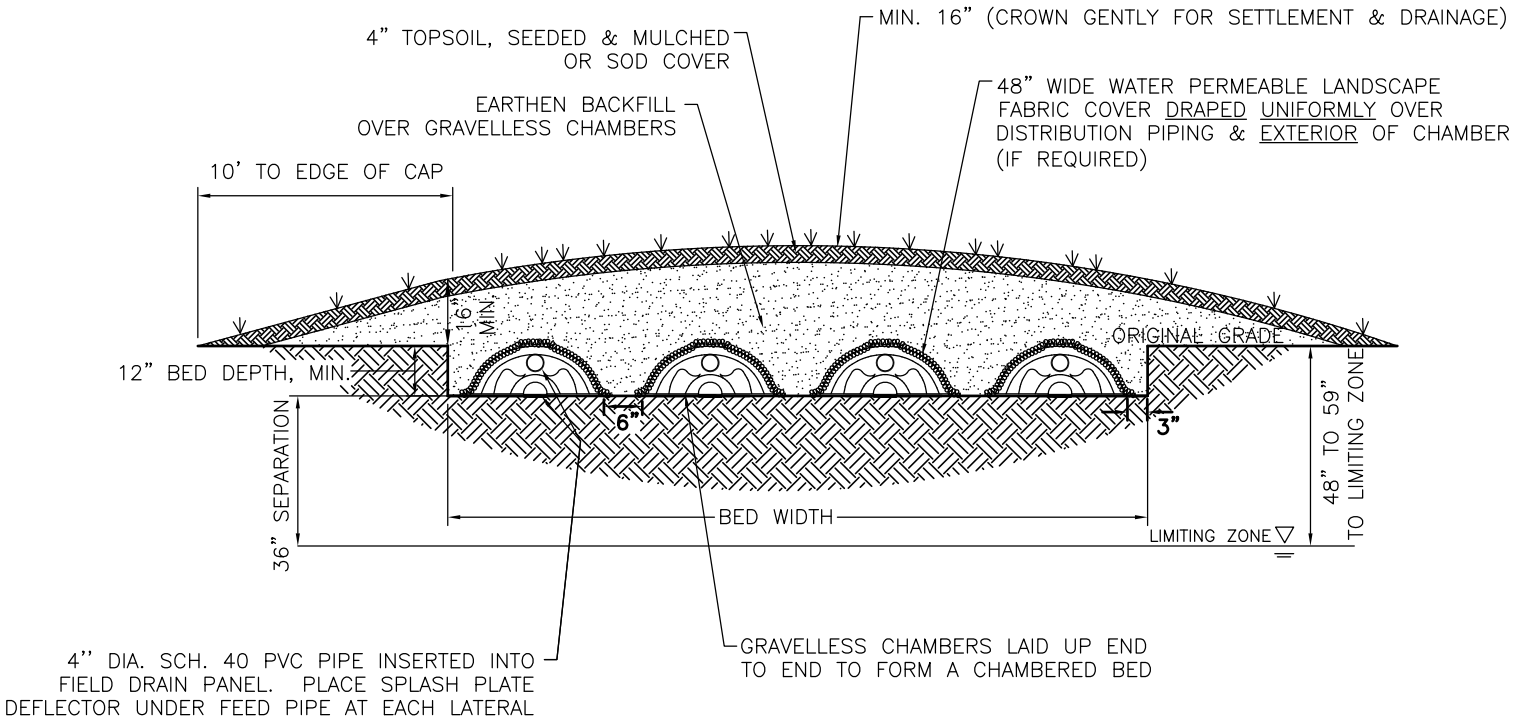

CAPPING FILL BED SECTION

STATE OF DELAWARE
DEPARTMENT OF NATURAL RESOURCES AND ENVIRONMENTAL CONTROL

TYPICAL AGGREGATE-FREE TRENCH/BED DESIGN
CAPPING FILL GRAVITY
(NOT TO SCALE)

ISSUED: JANUARY 1985
REVISED: JANUARY 2014

EXHIBIT - N

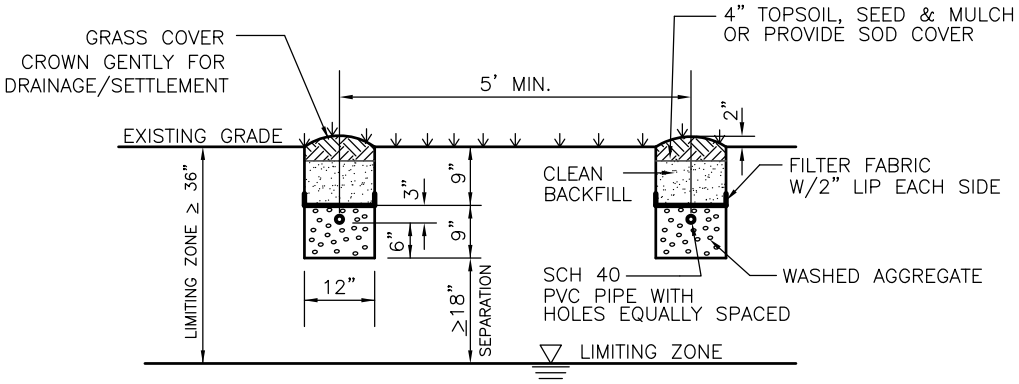

TRENCH CROSS SECTION

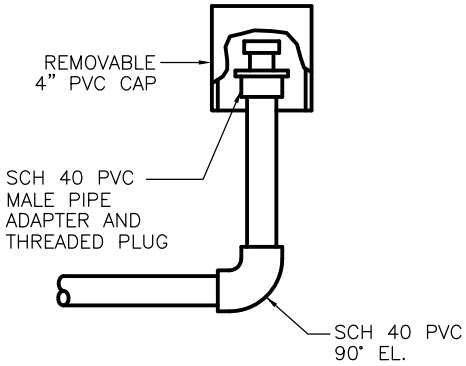

TURN-UP DETAIL

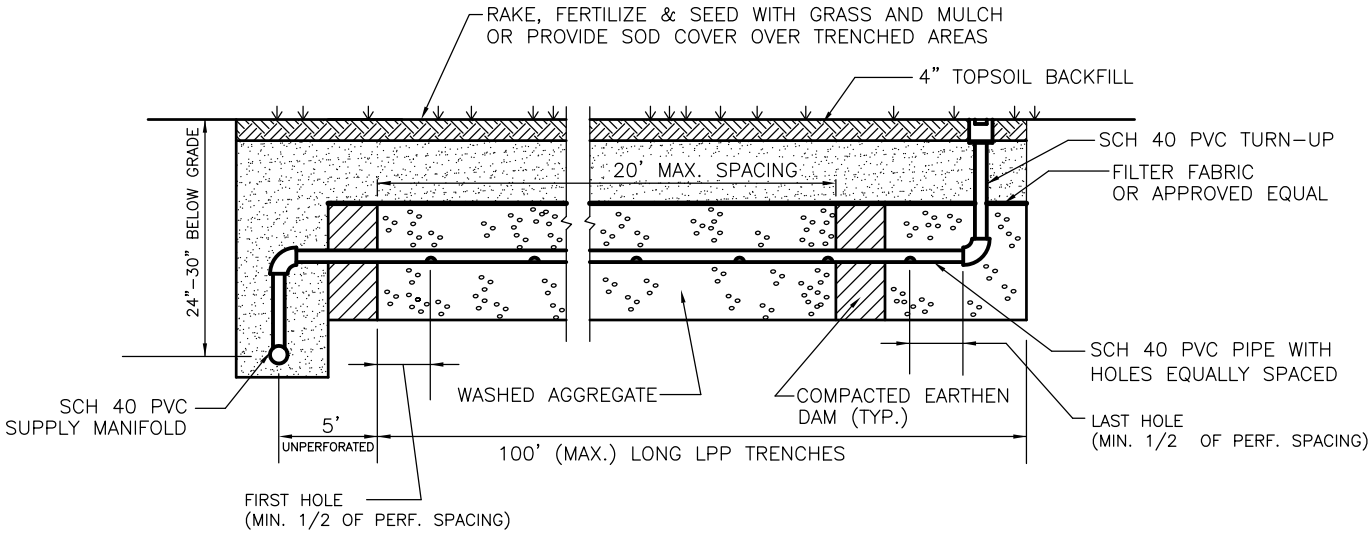

LPP TRENCH SECTION DETAIL

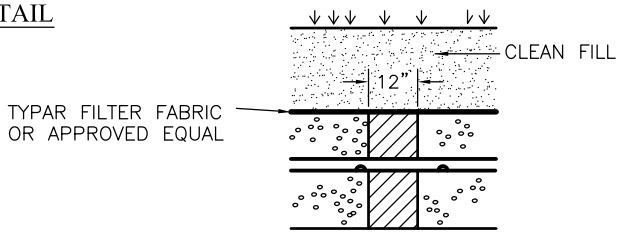

EARTHEN DAM DETAIL

STATE OF DELAWARE

DEPARTMENT OF NATURAL RESOURCES
AND ENVIRONMENTAL CONTROL

TYPICAL FULL DEPTH
LOW PRESSURE PIPE DESIGN
(NOT TO SCALE)

ISSUED: JANUARY 1985

REVISED: JANUARY 2014

EXHIBIT - O
(Sheet 1 of 3)

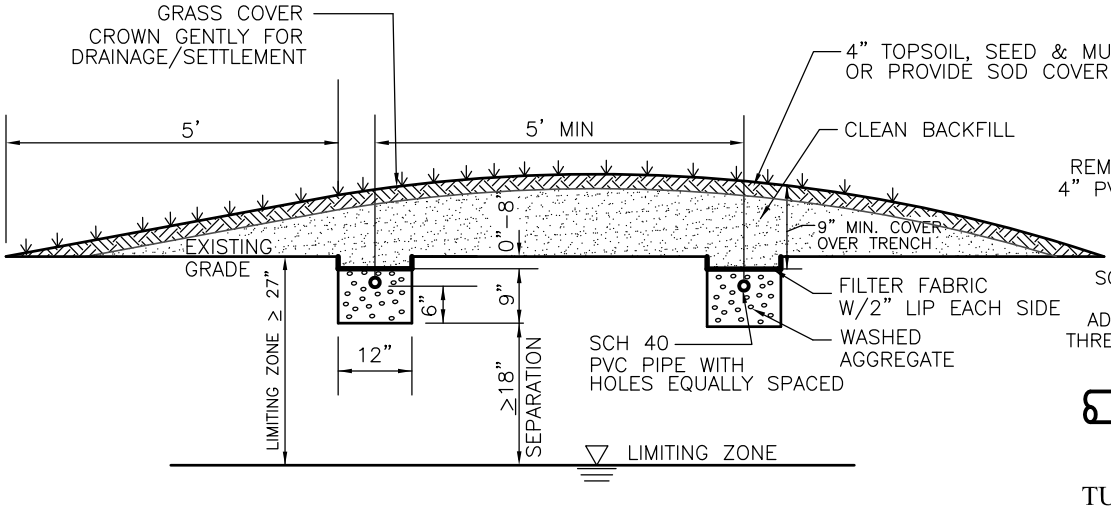

TRENCH CROSS SECTION

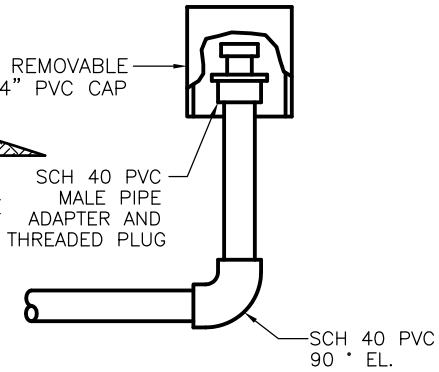

TURN-UP DETAIL

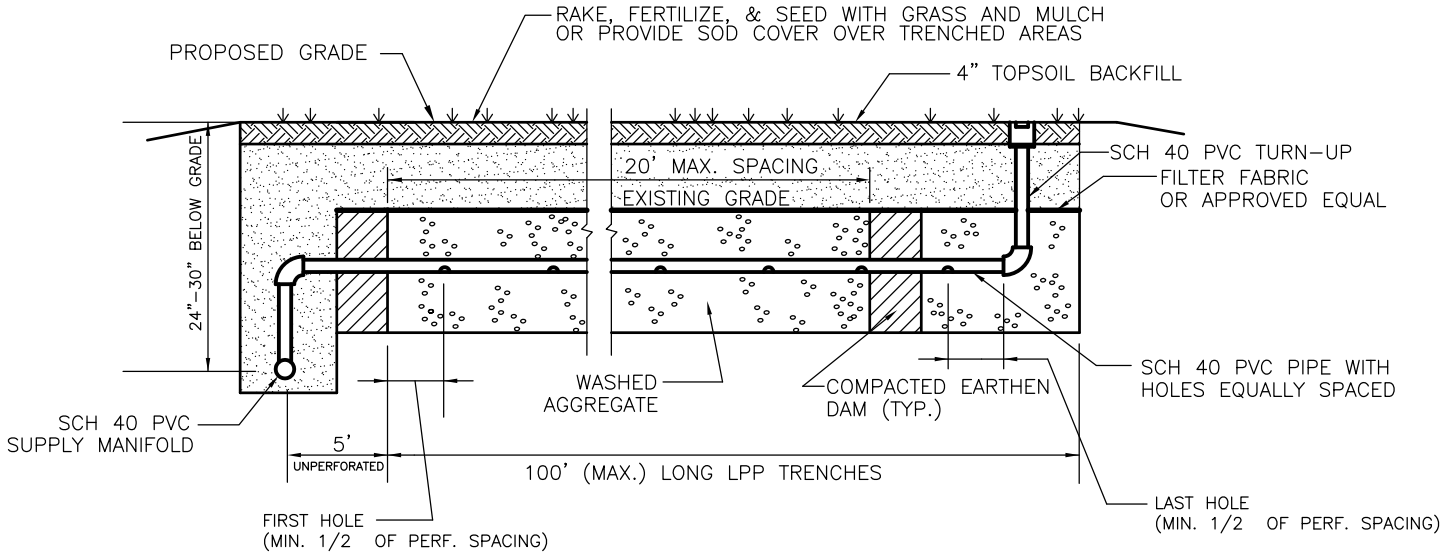

LPP W/CAP TRENCH SECTION DETAIL

STATE OF DELAWARE
DEPARTMENT OF NATURAL RESOURCES
AND ENVIRONMENTAL CONTROL

TYPICAL CAPPING FILL
LOW PRESSURE PIPE DESIGN
(NOT TO SCALE)

ISSUED: JANUARY 1985
REVISED: JANUARY 2014

EXHIBIT - O
(Sheet 2 of 3)

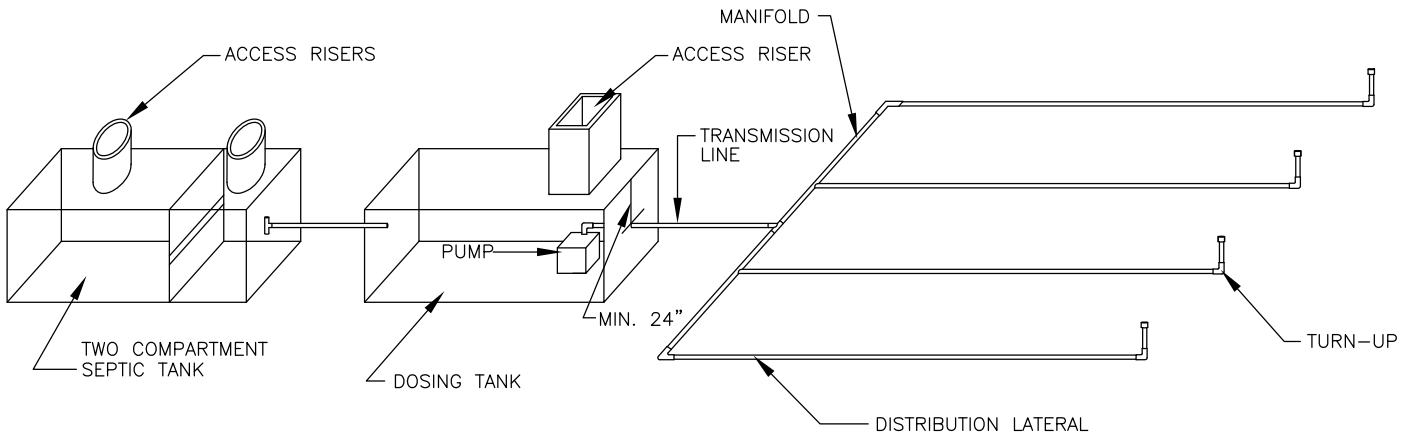

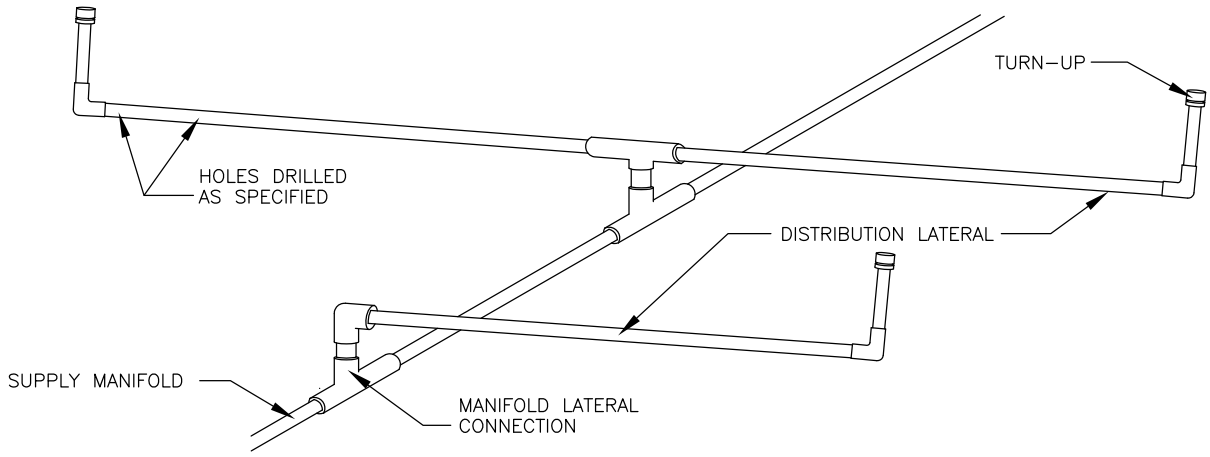

DISTRIBUTION SYSTEM

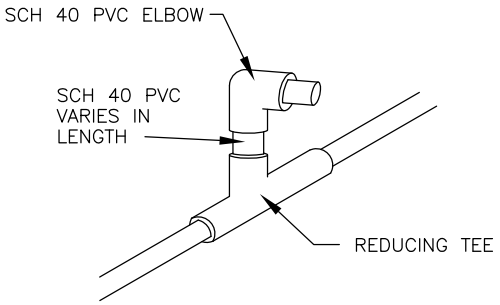

SIDE MANIFOLD LATERAL CONNECTION

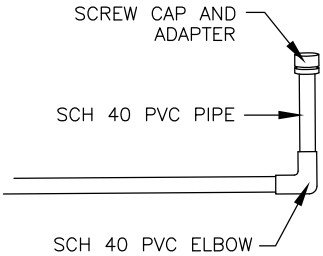

TURN-UP

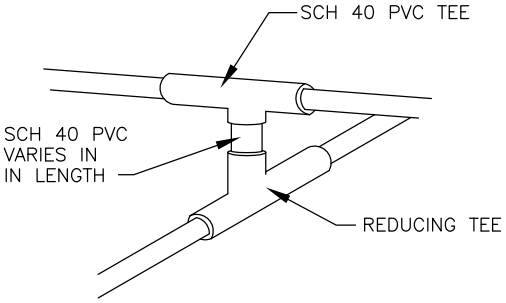

CENTER MANIFOLD LATERAL CONNECTION

STATE OF DELAWARE
DEPARTMENT OF NATURAL RESOURCES AND ENVIRONMENTAL CONTROL

TYPICAL DISTRIBUTION NETWORK FOR A LOW PRESSURE PIPE DESIGN
(NOT TO SCALE)

ISSUED: JANUARY 1985
REVISED: JANUARY 2014

EXHIBIT - O
(Sheet 3 of 3)

LOW PRESSURE PIPE DESIGN
PERCOLATION RATES & MAXIMUM HOLE SPACING DISTANCES

MPI	FACTOR	MAX. SPC'G
20	3.70	60
25	4.20	60
30	4.80	72
35	5.50	72
40	5.58	72
45	5.87	72
50	6.16	72
55	6.45	72
60	6.65	72
65	7.35	96
70	8.05	96
75	8.75	96
80	9.45	96
85	10.15	96
90	10.99	96
95	11.76	96
100	12.74	96
105	13.86	96
110	15.26	96
115	16.52	96
120	17.50	96

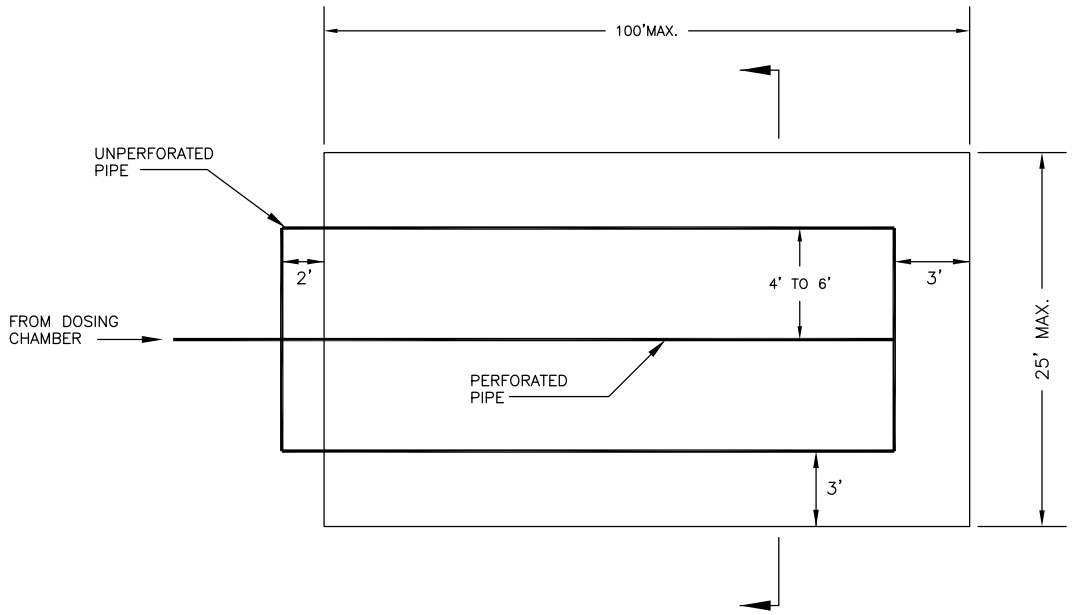

PLAN

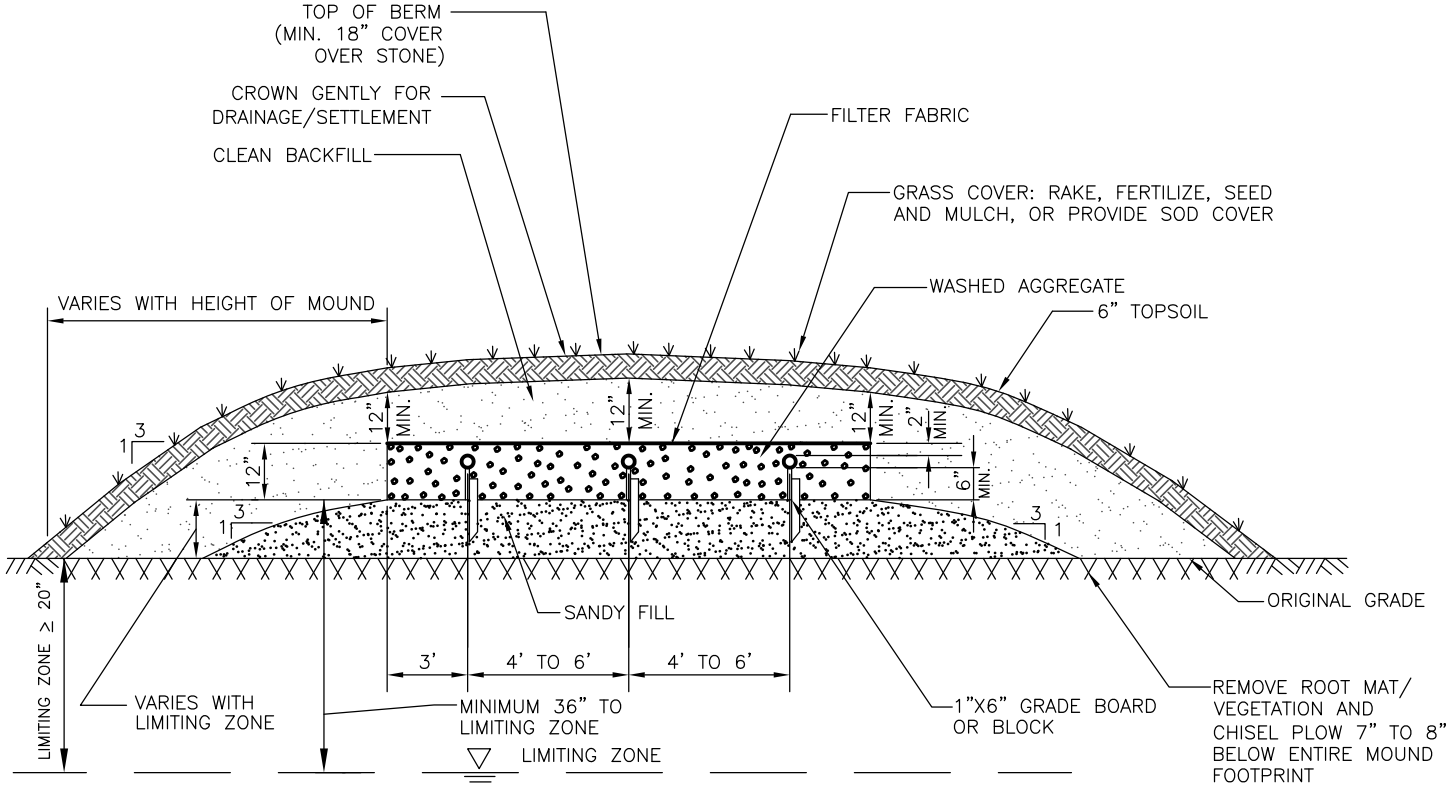

SECTION

STATE OF DELAWARE
DEPARTMENT OF NATURAL RESOURCES AND ENVIRONMENTAL CONTROL

TYPICAL
ELEVATED SAND MOUND
DESIGN

ISSUED: JANUARY 1985
REVISED: JANUARY 2014

EXHIBIT - Q
(Sheet 1 of 2)

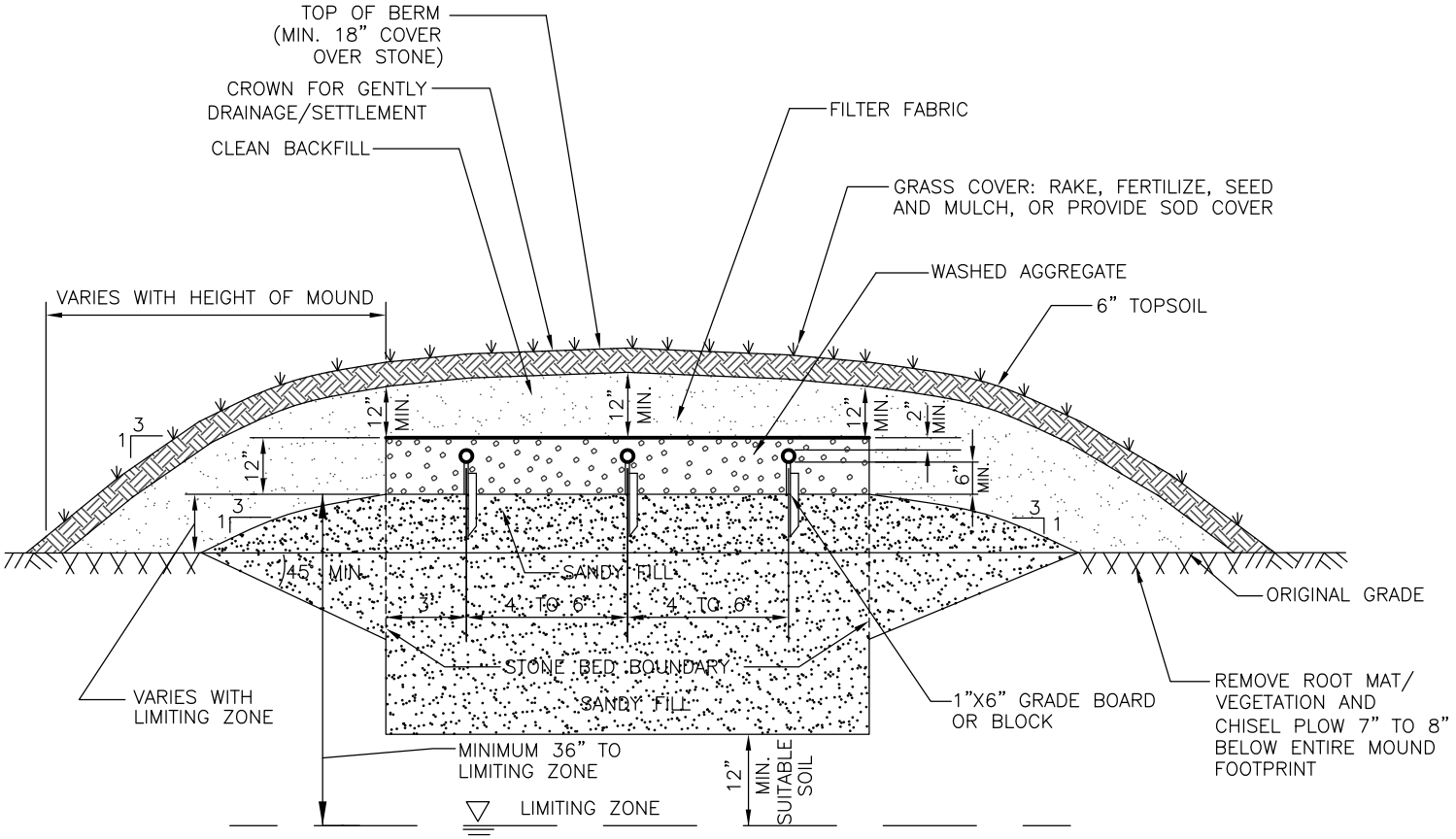

SECTION

STATE OF DELAWARE

DEPARTMENT OF NATURAL RESOURCES AND ENVIRONMENTAL CONTROL

TYPICAL SAND-LINED ELEVATED SAND MOUND DESIGN

ISSUED: JANUARY 1985

REVISED: JANUARY 2014

EXHIBIT - Q
(Sheet 2 of 2)

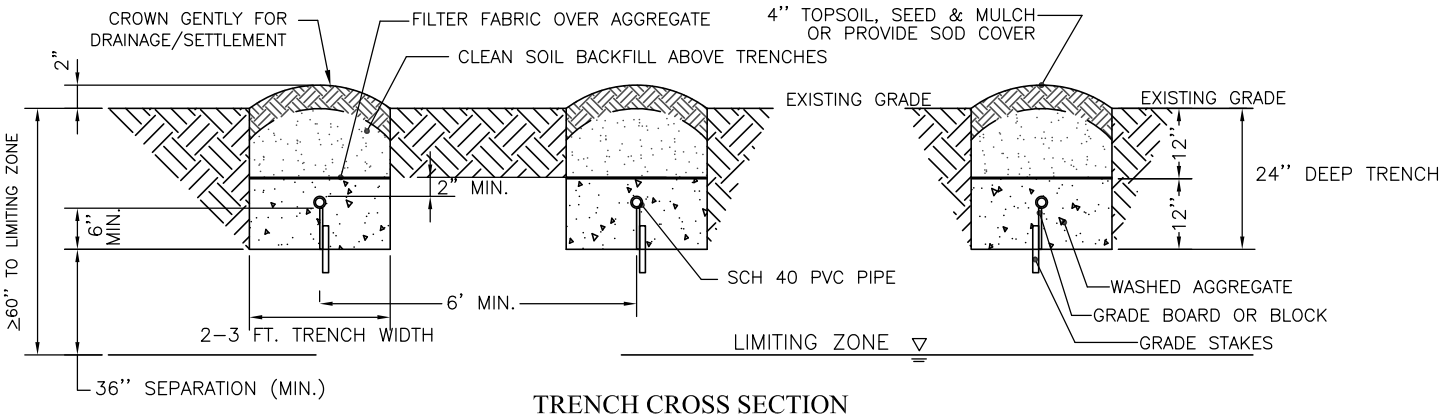

TRENCH CROSS SECTION

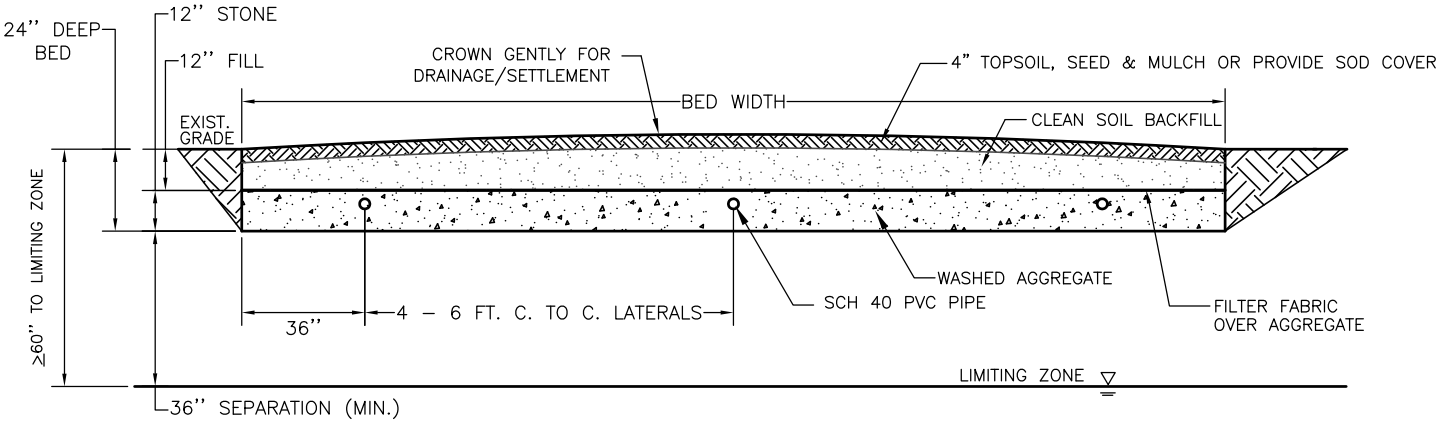

BED CROSS SECTION

STATE OF DELAWARE

DEPARTMENT OF NATURAL RESOURCES AND ENVIRONMENTAL CONTROL

TYPICAL PRESSURE-DOSED TRENCH/BED DESIGNS FULL DEPTH

ISSUED: JANUARY 1985

REVISED: JANUARY 2014

EXHIBIT - R

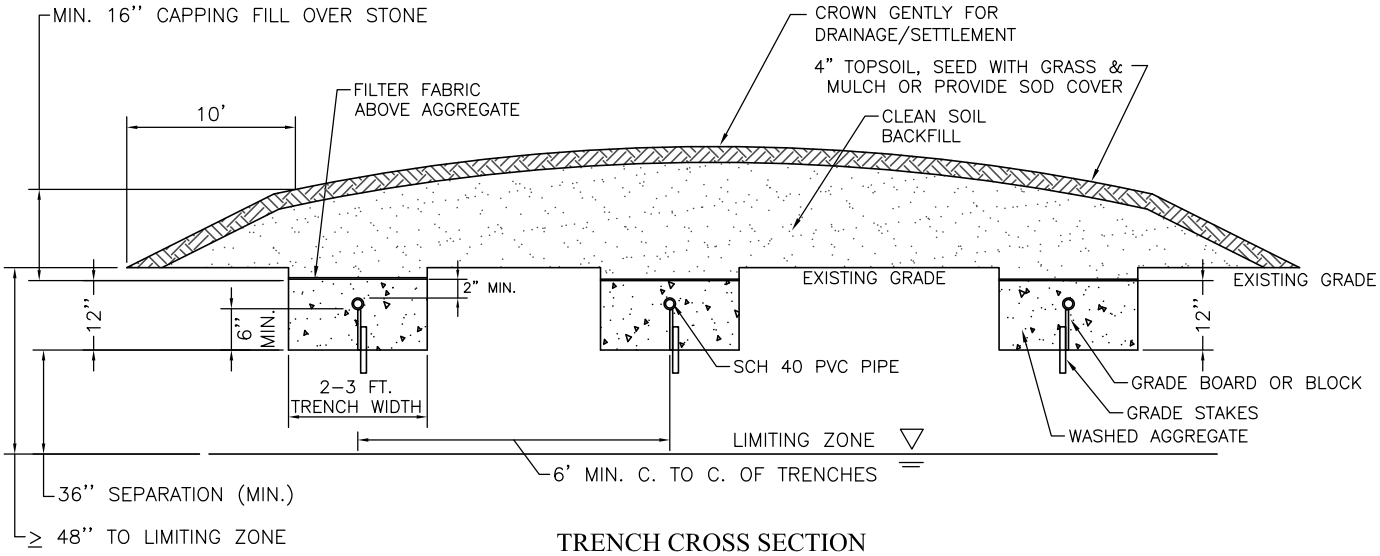

TRENCH CROSS SECTION

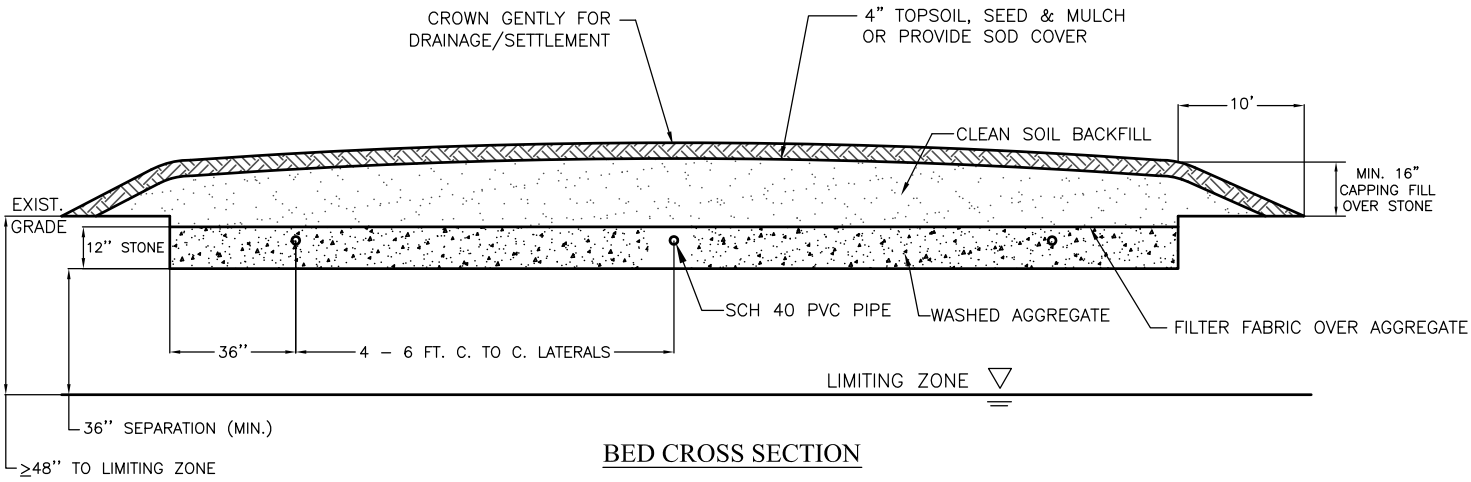

BED CROSS SECTION

STATE OF DELAWARE

DEPARTMENT OF NATURAL RESOURCES AND ENVIRONMENTAL CONTROL

TYPICAL PRESSURE DOSED TRENCH/BED DESIGN CAPPING FILL

ISSUED: JANUARY 1985

REVISED: JANUARY 2014

EXHIBIT - S

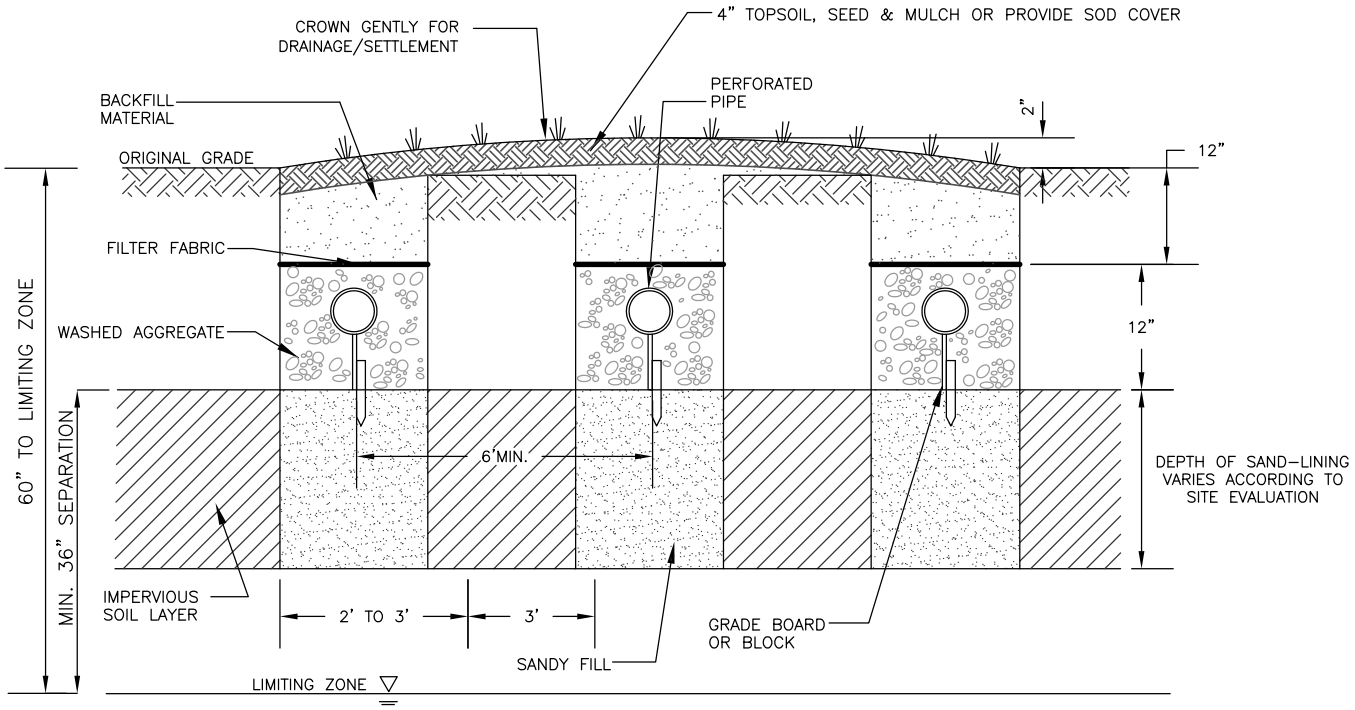

TRENCH SECTION

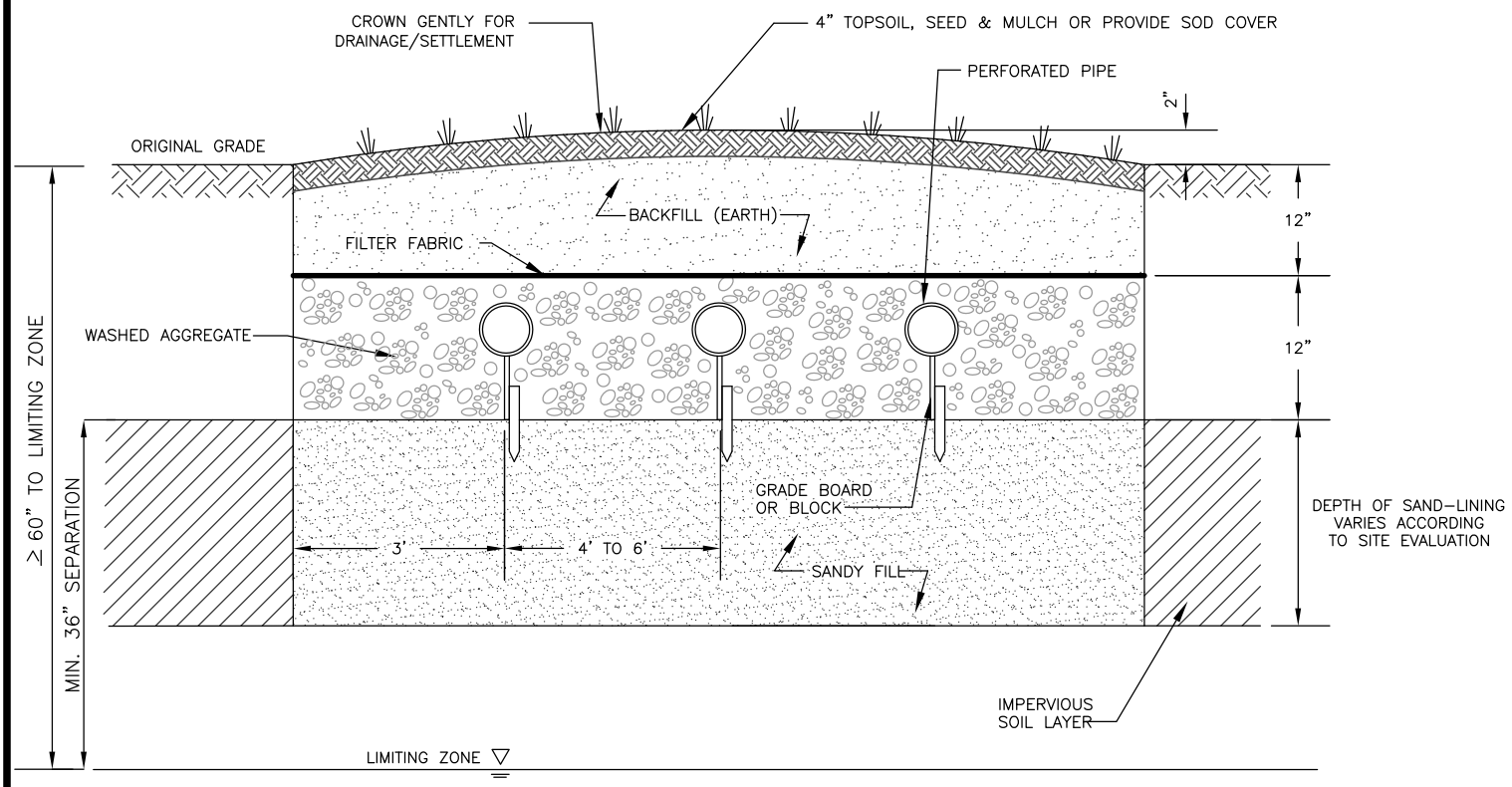

BED SECTION

STATE OF DELAWARE

DEPARTMENT OF NATURAL RESOURCES AND ENVIRONMENTAL CONTROL

TYPICAL SAND-LINED TRENCH/BED DESIGNS FULL DEPTH

ISSUED: JANUARY 1985

REVISED: JANUARY 2014

EXHIBIT - T

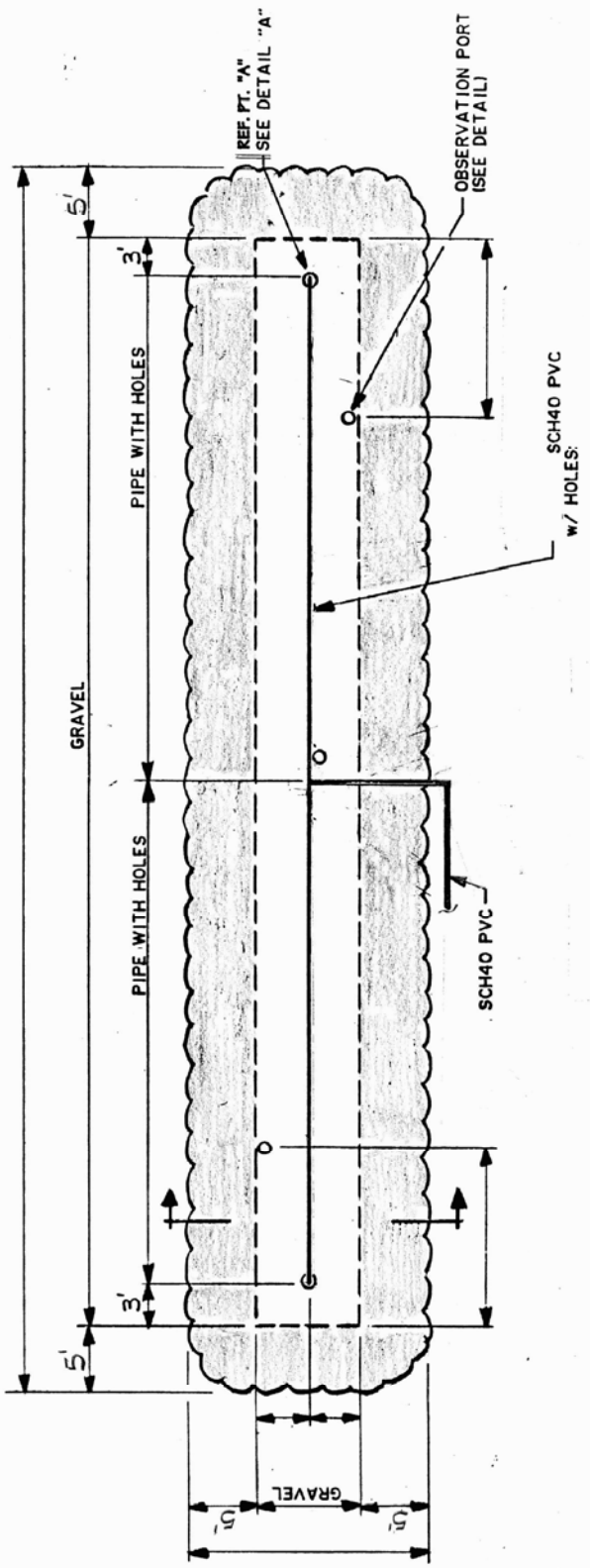

PLAN VIEW

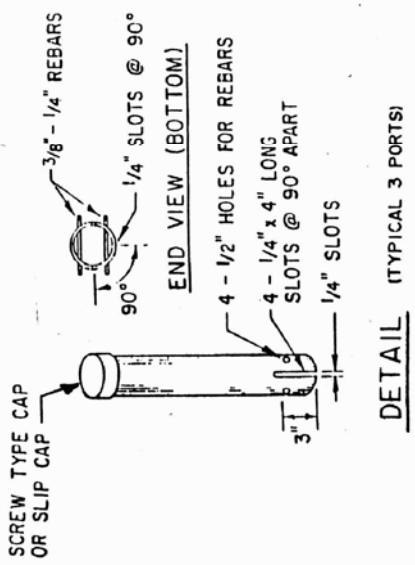

DETAIL (TYPICAL 3 PORTS)

STATE OF DELAWARE
DEPARTMENT OF NATURAL RESOURCES
AND ENVIRONMENTAL CONTROL

TYPICAL
WISCONSIN AT-GRADE
DISPOSAL SYSTEM DESIGN
(NOT TO SCALE)

ISSUED: JANUARY 2014
REVISED: _____

EXHIBIT - U
(Sheet 1 of 2)

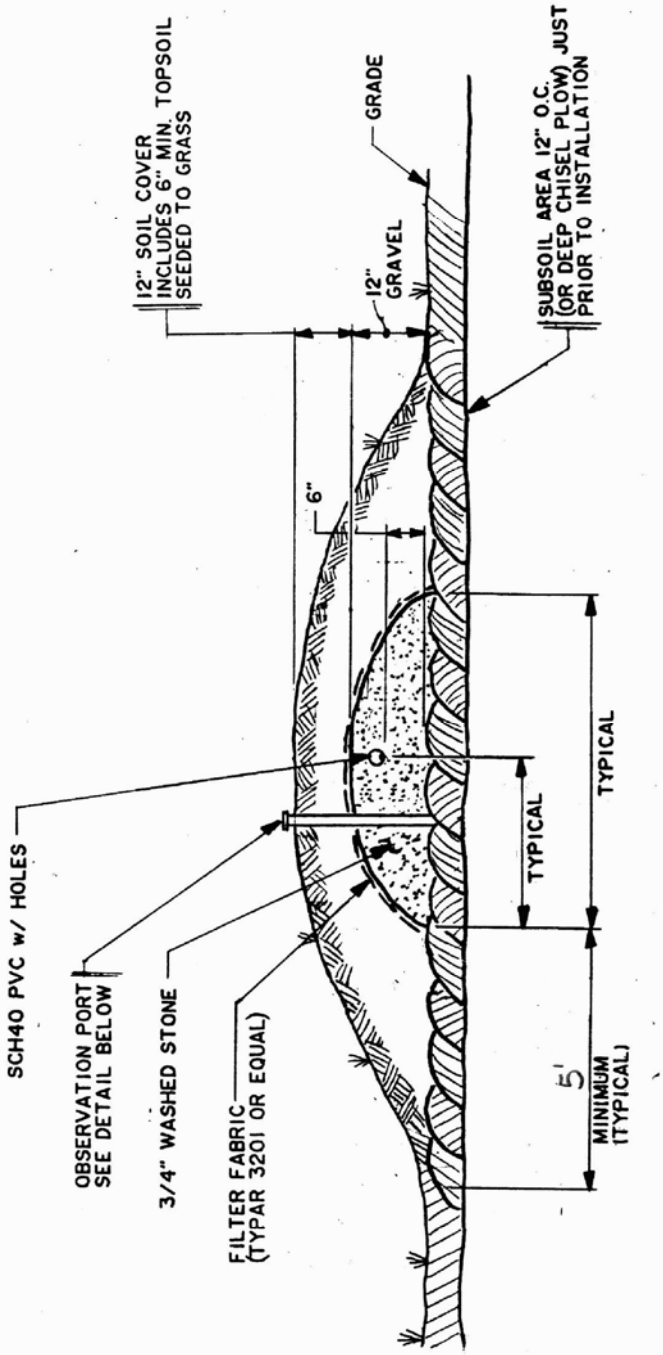

SECTION

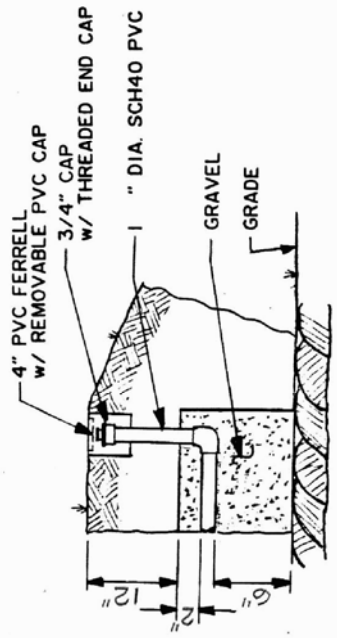

DETAIL "A"

STATE OF DELAWARE

DEPARTMENT OF NATURAL RESOURCES
AND ENVIRONMENTAL CONTROL

TYPICAL
WISCONSIN AT-GRADE
DISPOSAL SYSTEM DESIGN
(NOT TO SCALE)

ISSUED: JANUARY 2014

REVISED: _____

EXHIBIT - U
(Sheet 2 of 2)

Long Term Acceptance Rate (LTAR) Calculation

Permeability Rate (MPI)	K (ft/min)	LTAR (gpd/ft^2)
20	0.0042	0.525
25	**0.0033**	**0.501**
30	0.0028	0.483
35	**0.0024**	**0.469**
40	0.0021	0.458
45	**0.0019**	**0.448**
50	0.0017	0.440
55	**0.0015**	**0.433**
60	0.0014	0.427
65	**0.0013**	**0.421**
70	0.0012	0.416
75	**0.0011**	**0.412**

Incremental Loading Rate (ILR) Calculation

	Structure			
Texture	Moderate to Strong	Weak	Massive	Single Grain
Sand or coarser	NR	NR	NR	NR
Loamy Sand	**NR**	**0.50**	**NR**	**0.45**
L. fine sand–fine sand	NR	0.35	0.20	0.30
Sandy Loam	**0.40**	**0.30**	**0.10**	**NR**
Fine SL-L-Silt Loam	0.30	0.20	0.00	NR
Sandy Clay Loam	**0.25**	**0.15**	**0.00**	**NR**
Clay Loam-Silty CL	0.20	0.10	0.00	NR
Sandy Clay-Silty C-C	**0.05**	**0.01**	**0.00**	**NR**

NR = Not Recommended
0.00 for any cemented class or any consistency stronger than firm

On-Site Wastewater Treatment and Disposal System Siting Information

SYSTEM TYPE	DEPTH TO THE LIMITING ZONE (LZ)	SEPARATION REQUIREMENTS			TRENCH DEPTH
		SMALL SYSTEM	LARGE SYSTEM[1]	POINT OF COMPLIANCE	
Denial	0 – <11 inches	N/A	N/A	N/A	N/A
Alternative Technologies	11 – 18 inches	*	*	*	*
Micro-Irrigation (Drip)	≥18 inches	18 inches	18 inches	Tubing	0 – 6 inches
Peat Biofilters	≥12 inches	12 inches	12 inches	Aggregate	N/A
Elevated Sand Mound	20 – 26 inches	36 inches	36 inches	Aggregate/Chamber	N/A
Wisconsin At-Grade	24 – 26 inches	24 inches	24 inches	Land Surface	N/A
Low Pressure Pipe (CF)	27 – 35 inches	18 inches	18 inches	Aggregate/Chamber	Varies, min. 9 inches
Low Pressure Pipe (FD)	36 – 47 inches	18 inches	18 inches	Aggregate/Chamber	18 inches
Gravity Capping Fill	48 – 59 inches	36 inches	N/A	Aggregate/Chamber	Varies, min. 12 inches
Pressure-Dosed (CF)	48 – 59 inches	36 inches	36 inches	Aggregate/Chamber	Varies, min. 12 inches
Full Depth Gravity	≥60 inches	36 inches	N/A	Aggregate/Chamber	24 inches
Pressure-Dosed (FD)	≥60 inches	36 inches	36 inches	Aggregate/Chamber	24 inches
Rapid Infiltration Basin (RIB)	≥48 inches	N/A	24 inches	Basin Bottom	N/A
Spray Irrigation	>24 inches	N/A	24 inches	Beneath Root Zone	N/A

[1] Large system separation requirements must be maintained from the mounded seasonal high water table to the point of compliance.

*Depends on the method of disposal.

In replacement situations with limiting zones < 20" an ESM may be assigned by a Class D soil scientist and may require advanced treatment. In this instance, converting a residential use to a commercial use the maximum allowable daily flow is 500 gpd.

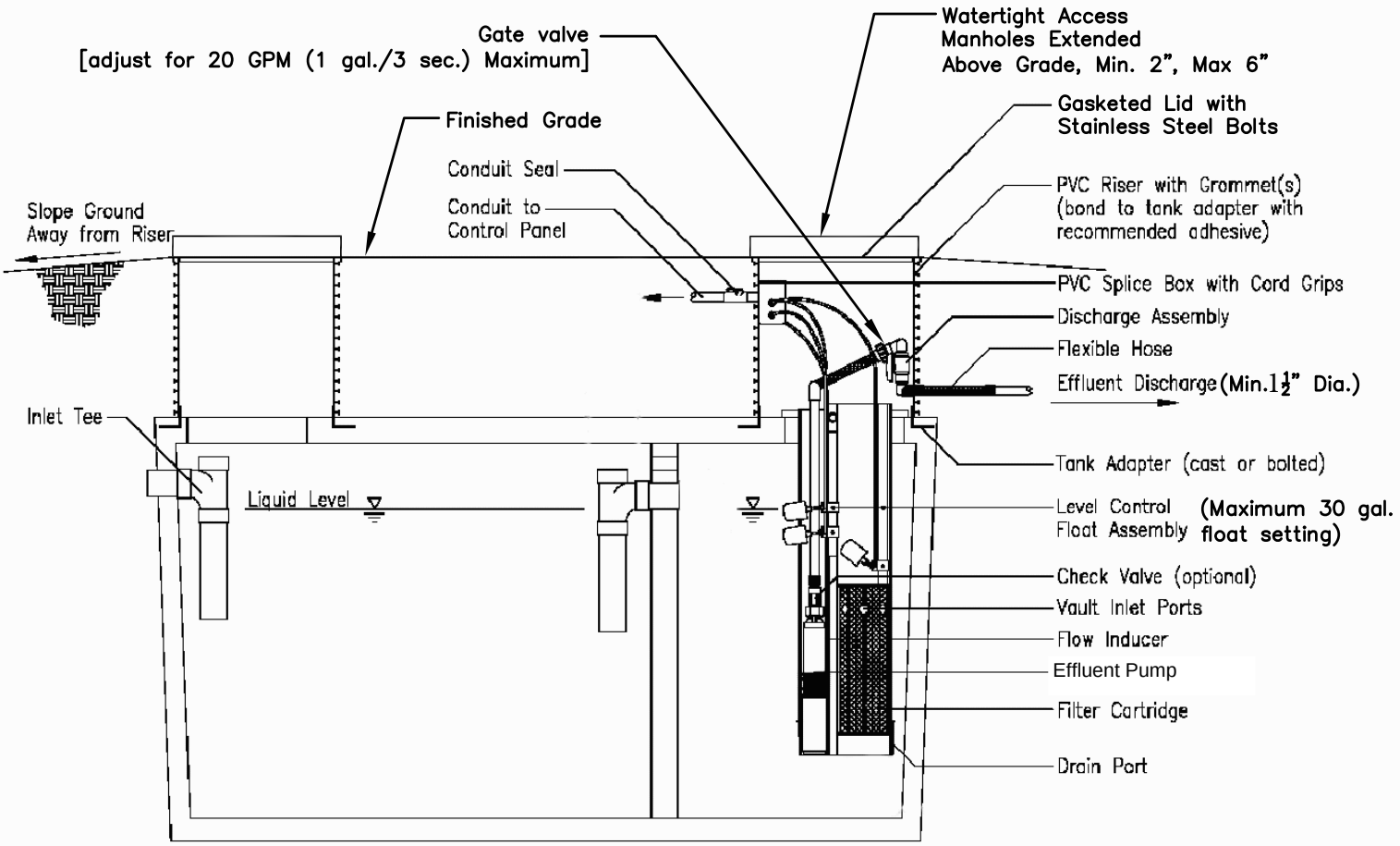

STATE OF DELAWARE

DEPARTMENT OF NATURAL RESOURCES
AND ENVIRONMENTAL CONTROL

SEPTIC TANK LIFT STATION

(NOT TO SCALE)

ISSUED: JANUARY 2014

REVISED: _____

EXHIBIT - X

PERCOLATION RATES
BASED UPON USDA SOIL TEXTURES

USDA TEXTURE	DNREC ASSIGNED PERMEABILITY RATE (MPI)*
Sands	5
Loamy Sand	10
Sandy Loam	20
Sandy Clay Loam	30
Loam	30
Silt Loam	50
Silt	50
Clay Loam	75
Silty Clay Loam	75
Sandy Clay	120
Silty Clay	120
Clay	120

* Other soil properties such as high bulk density, structure, total porosity, and size and continuity of the pores may significantly affect these permeability rates. Textures of loamy coarse sand and coarse sandy loam may have permeability rates faster than assigned, while loamy very fine sand, loamy fine sand, very fine sandy loam and fine sandy loam may have permeability rates slower than assigned.

Permeability Class	Permeability Rate (mpi)
Very Slow	> 120
Slow	50 – 120
Moderate	25 – 49
Moderately Rapid	10 – 25
Rapid	6 – 10
Very Rapid	< 6

STATE OF DELAWARE
DEPARTMENT OF NATURAL RESOURCES
AND ENVIRONMENTAL CONTROL

PERCOLATION RATES
BASED UPON
U.S.D.A. SOIL TEXTURES

ISSUED: JANUARY 2014
REVISED: _____

EXHIBIT - Y

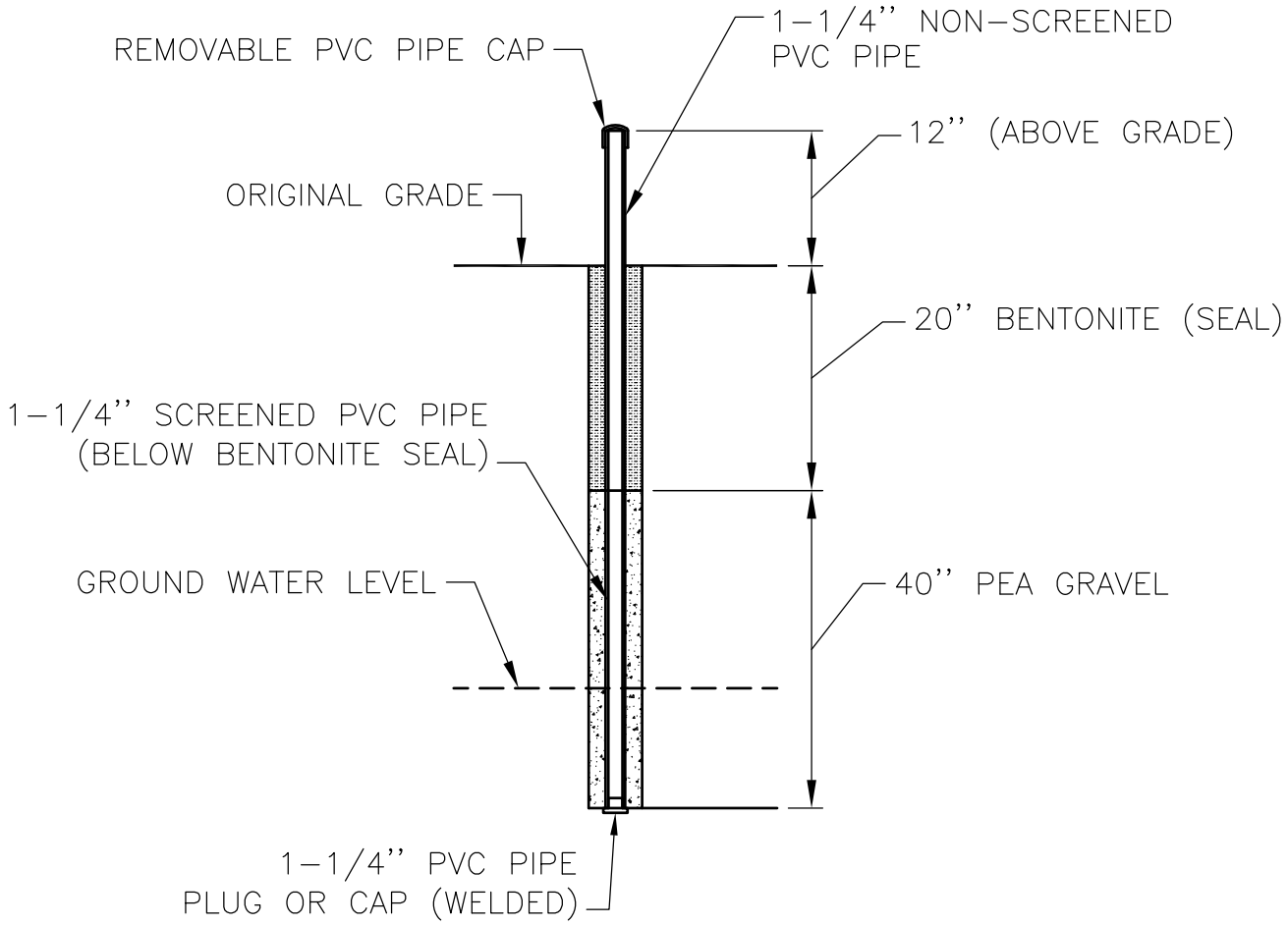

STATE OF DELAWARE

DEPARTMENT OF NATURAL RESOURCES AND ENVIRONMENTAL CONTROL

OBSERVATION WELL CONSTRUCTION DIAGRAM

(NOT TO SCALE)

ISSUED: JANUARY 2014

REVISED: _____

EXHIBIT - Z

ON-SITE WASTEWATER SYSTEM ABANDONMENT REPORT

DELAWARE
DIVISION OF WATER RESOURCES
Working for YOU to Provide "Clean Water for Today and Tomorrow"

(Please Type or Print Legibly)

TAX MAP #: _____

DNREC LICENSEE NAME:_____ DNREC LICENSE #: _____ PHONE #:_____

OTHER GOVERNMENTAL APPOINTEE
LICENSE NAME: _____ LICENSE #: _____ PHONE #:_____

ABANDONMENT DATE: _____

THIS FORM MUST BE SUBMITTED WITHIN 10 DAYS OF COMPLETION

REASON FOR ABANDONMENT: ☐ **Connection to Central Sewer** ☐ **New System Installed**

☐ **Other** (Explain) _____

IF NEW SYSTEM INSTALLED - PERMIT #: _____

ABANDONED SYSTEM PERMIT #: _____

WAS ABANDONED SYSTEM A:
(Check all that apply)

☐ **Cesspool** **# Cesspools** _____
☐ **Seepage Pit** **# Seepage Pits** _____
☐ **Concrete Tank** **# Concrete Tanks** _____
☐ **Steel Tank** **# Steel Tanks** _____

TYPE OF ABANDONMENT:
(Check all that apply)

☐ **Crushed and Filled** ☐ **Removed and Filled**
☐ **Removed and New Tank Installed in Same Location**

_____ _____
Date Licensee Signature

STATE OF DELAWARE
DEPARTMENT OF NATURAL RESOURCES AND ENVIRONMENTAL CONTROL

SYSTEM ABANDONMENT REPORT

ISSUED: JANUARY 1985
REVISED: JANUARY 2014

EXHIBIT - A A

Peat System Design Loading Rates

Soil Type	Permeability Rate (mpi)	Hydraulic Loading Rate (gpd/ft²) Trench	Hydraulic Loading Rate (gpd/ft²) Bed
S	5	2.033	1.597
LS	10	1.437	1.129
	15	1.174	.922
SL	20	1.016	.799
	25	.909	.714
SCL, L	30	.803	.652
	35	.768	.604
	40	.719	.565
	45	.678	.532
Si, SiL	50	.643	.505
	55	.613	.482
	60	.587	.461
	65	.564	.443
	70	.543	.427
CL, SiCL	75	.525	.412
	80	.508	.399
	85	.493	.387
	90	.479	.376
	95	.466	.366
	100	.455	.357
	105	.444	.349
	110	.433	.341
	115	.424	.333
SC, SiC, C	120	.415	.326

Notes:

1. For commercial and/or large systems, please contact the GWDS and the manufacturers for additional siting criteria.

Micro-Irrigation "Drip" Design Loading Rates

Soil Type	Permeability Rate (mpi)	Hydraulic Loading Rate (gpd/ft²)	Drip – Line Spacing	Emitter Spacing
S	5	.303	Typically 24"	Typically 24"
LS	10	.278		
	15	.253		
SL	20	.228		
	25	.211		
SCL, L	30	.203		
	35	.196		
	40	.189		
	45	.180		
Si, SiL	50	.173		
	55	.162		
	60	.154		
	65	.146		
	70	.139		
CL, SiCL	75	.133		
	80	.127		
	85	.122		
	90	.117		
	95	.116		
	100	.105		
	105	.096		
	110	.088		
	115	.080		
SC, SiC, C	120	.073		

Notes:

1. Primary effluent systems require automation of filter and field flushing.
2. Spacing of drip-line and emitters may also be a function of soil textures and landscaping requirements. Please contact manufacturer for recommendations and limitations.
3. For commercial and/or large systems, please contact the GWDS and the manufacturers for additional siting criteria.

STATE OF DELAWARE
DEPARTMENT OF NATURAL RESOURCES AND ENVIRONMENTAL CONTROL

MICRO-IRRIGATION "DRIP" DESIGN LOADING RATES

ISSUED: JANUARY 2014
REVISED: _____

EXHIBIT - C C

MICRO-MOUND CROSS-SECTION

NTS

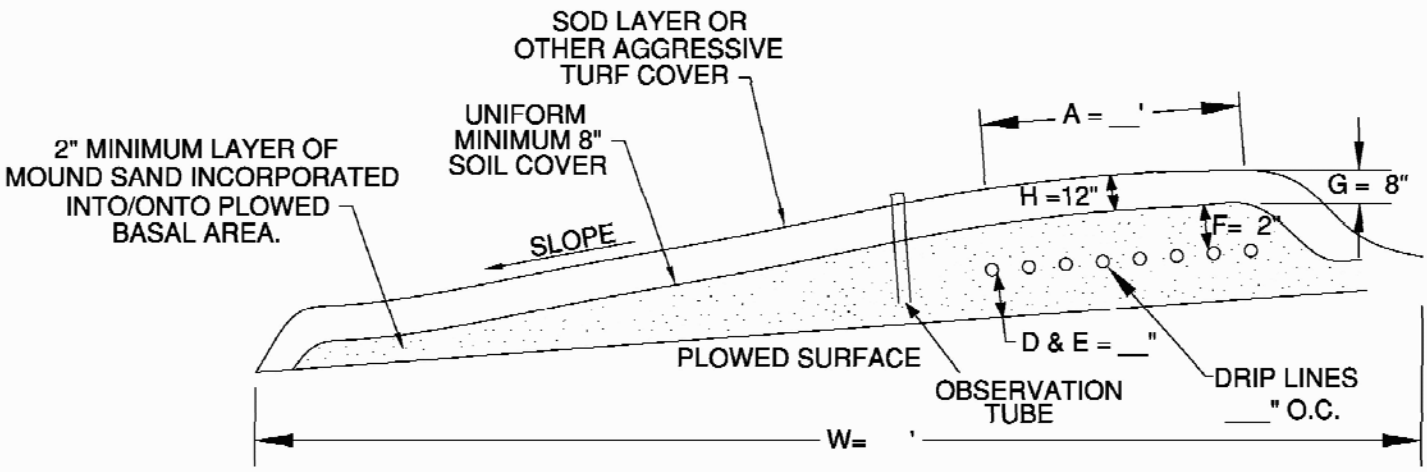

STATE OF DELAWARE DEPARTMENT OF NATURAL RESOURCES AND ENVIRONMENTAL CONTROL	MICRO-IRRIGATION "DRIP" DIPSERSAL INSTALLATION METHODS MICROMOUND/DRIP CROSS SECTION	ISSUED: JANUARY 2014 REVISED: _____ EXHIBIT - D D (Sheet 1 of 3)

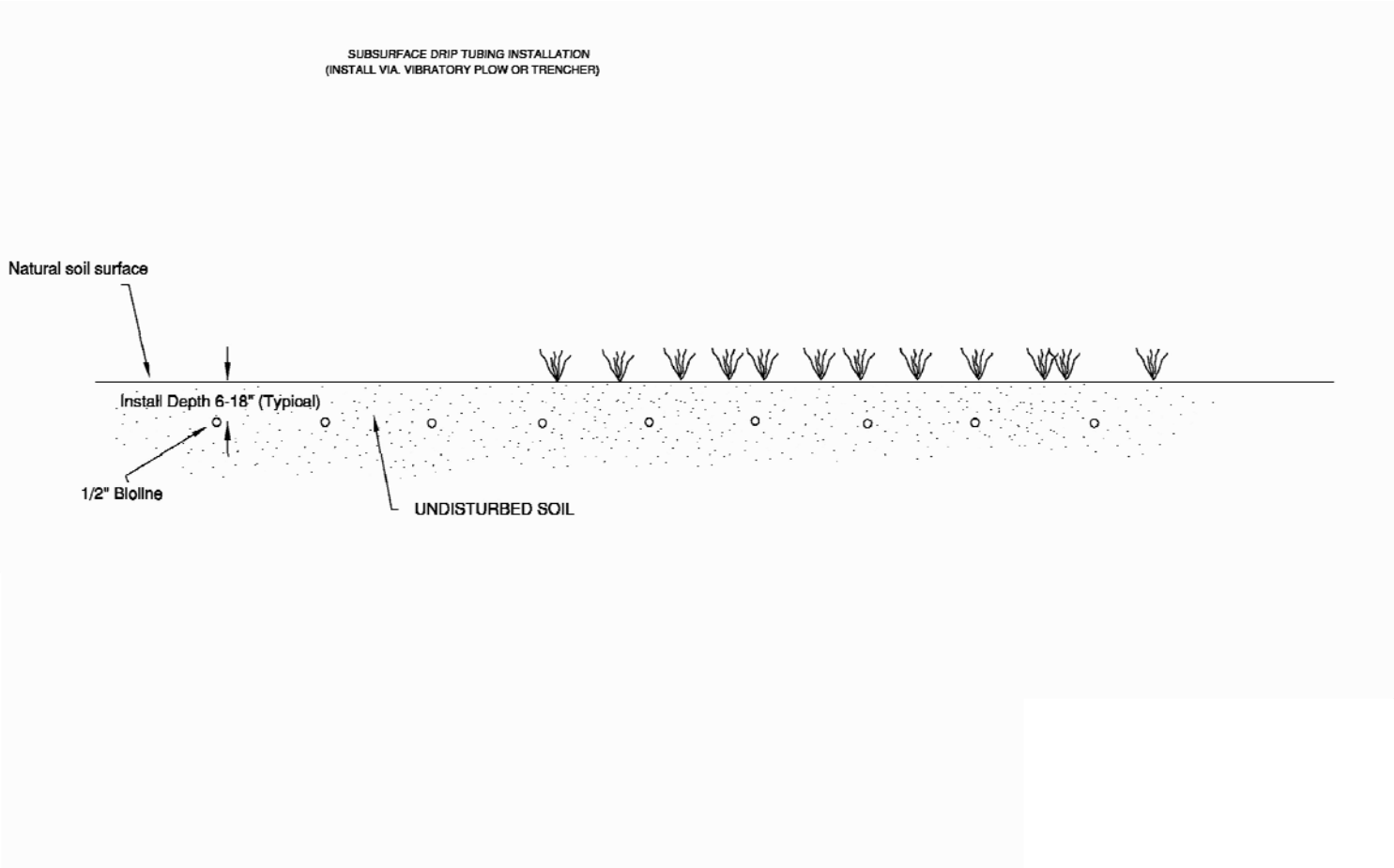

STATE OF DELAWARE

DEPARTMENT OF NATURAL RESOURCES AND ENVIRONMENTAL CONTROL

MICRO-IRRIGATION "DRIP"
DIPSERSAL INSTALLATION METHODS
SUBSURFACE DRIP
CROSS SECTION

ISSUED: JANUARY 2014

REVISED: _____

EXHIBIT - D D
(Sheet 2 of 3)

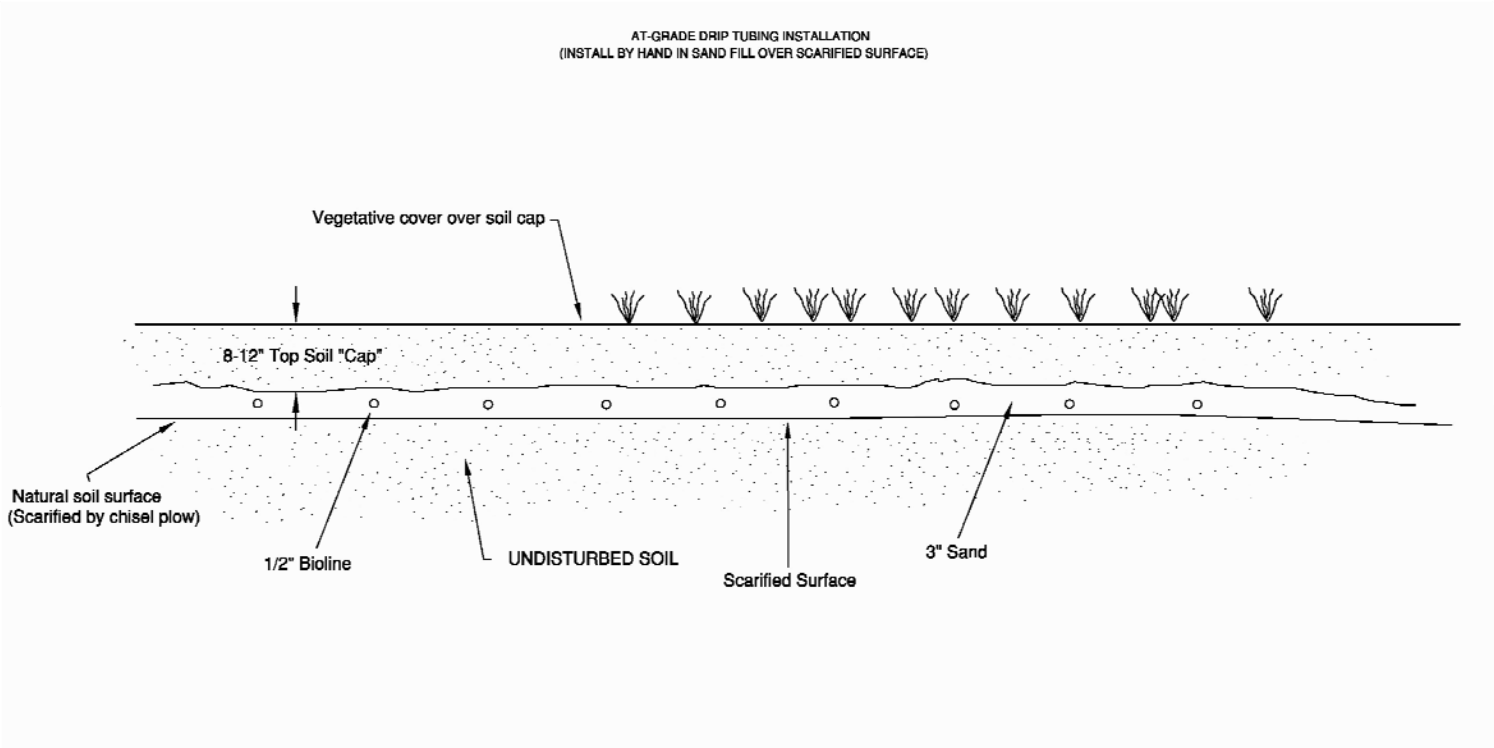

STATE OF DELAWARE

DEPARTMENT OF NATURAL RESOURCES AND ENVIRONMENTAL CONTROL

MICRO-IRRIGATION "DRIP"
DIPSERSAL INSTALLATION METHODS
AT-GRADE DRIP
CROSS SECTION

ISSUED: JANUARY 2014

REVISED: _____

EXHIBIT - D D
(Sheet 3 of 3)

Department of Natural Resources and Environmental Control
Ground Water Discharges Section
Product Approval Checklist

Any persons seeking approval of an innovative and alternative on-site wastewater treatment unit and/or disposal system, product or component shall make an application in writing to the Ground Water Discharges Section of the Department of Natural Resources and Environmental Control in accordance with the Regulations Governing the Design, Installation, and Operation of On-Site Wastewater Treatment and Disposal Systems, and the checklist below. Please submit one copy of all requested material as applicable to the Ground Water Discharges Section, 89 Kings Highway, Dover, DE 19901 (phone 302-739-9948).

1. Application Information Required for all Systems or Protocols
    a. Name, address, phone number, fax number and email address for manufacturer, owner and agent.
    b. Executive summary describing the system, stating the type of approval sought, model numbers, and treatment levels as applicable
    c. System proposed is fully described with the following information:
        i. Construction drawings provided detailing all system components;
        ii. Specifications describing all materials to be used, methods of construction, means for assuring the quality and integrity of the finished product, and installation procedures;
        iii. Materials specified for use in construction are equal or superior in physical properties and chemical durability
        iv. Any special conditions for use, installation, operation; and monitoring and maintenance that should be conditions of any approval document.
    d. Provide summary of pertinent literature, published research, and previous experience and performance with the system.
    e. Provide other state approvals.
    f. Provide results of any available testing, research or monitoring of pilot systems or full scale operational systems conducted by a third party independent research or testing organization. These independent studies must have adequate research from highly controlled, third party studies with rigorous research protocols or well documented long term use studies of proven wastewater technologies.
    g. Operation, Maintenance and Monitoring procedures for system.
    h. Notification given of any proprietary information, system, component, or device.
    i. Local distributor information and contact information.

The Applicant hereby certifies that, to the best of his/her knowledge and beliefs, a complete factual representation of the information requested above has been provided:

_____ _____
Applicant Date

Lot Clearing/Disturbed Site Inspection Report

Date of Report: _____ **Tax Map #:** _____

Date of Field Inspection: _____ **Septic Permit #:** _____

Location of Site: _____

- **Observation Method**: Boring(s) Test Pit(s) Probe
- **Inspected Area**: Initial Replacement
- **Selected Observable Features Indicative of Soil Compaction (upper 24 inches only)**:

Auger Resistance [1]:	Yes	No	N/A	Min & Max. Depth Observed _____
Platy Soil Structure [2]:	Yes	No	N/A	Min & Max. Depth Observed _____
Redoximorphic Concentrations [3]:	Yes	No	N/A	Min. Depth Observed _____
Visible Ruts From Equipment:	Yes	No	N/A	Max. Depth Observed _____
Presence of Fill or Stockpiling:	Yes	No	N/A	Max. Depth Observed _____
Evidence of Surface Ponding:	Yes	No	N/A	Comments _____
Moisture Content Suitable for Installation:	Yes	No		Comments _____
Stumps Visible:	Yes	No	N/A	
Drainfield Area Flagged, Roped, or Barricaded [4]:	Yes	No	N/A	
Soil Horizons Mixed (> 9 inches from surface) [5]:	Yes	No	N/A	

- **Summary of Inspection:** (Circle one or both)

  ? The area reserved for the initial/replacement disposal system, as of the date of inspection, does not appear to have been adversely affected by tree clearing.

  ? The area reserved for the initial/replacement disposal system, as of the date of inspection, does appear to have been adversely affected by tree clearing.

  Inspectors Comments: _____

Signed: _____ **License #:** _____

[1] Auger boring resistance is a subjective observation and may be affected by soil moisture state.
[2] Platy structure can be a result of soil compression/compaction.
[3] Redoximorphic (Iron Oxide) concentrations can form quickly in response to compaction as a result of slowed water movement thru the soil.
[4] Marking the proposed drainfield to help prevent equipment encroachment and possible compaction is a recommended practice.
[5] Extensively mixed soils may prevent the system from functioning hydraulically or from a treatment perspective.

Http://www.fieldcrops.org

Http://www.umd.edu/mce/

Http://ag.udel.edu/extension/agnr/agronomy.htm

Http://mawaterquality.org/

Http://www.agguide.agronomy.psu.edu

Http://pubs.ext.vt.edu/

Http://rutgers.edu

Http://ipni.net/ipniweb/pnt.nsf

Http://nanc.ipni.net/articles/nanc0005-en

Cumulative metal loading limit for spray irrigation systems

	Soil Cation Exchange Capacity (meq/100g)[1]		
	0-5	5-15	>15
	- - - Cumulative Limit - lb/ac (**Kg/ha**) - - -		
Metal			
Pb	500 (**560**)	1000 (**1120**)	2000 (**2240**)
Zn	250 (**280**)	500 (**560**)	1000 (**1120**)
Cu	125 (**140**)	250 (**280**)	500 (**560**)
Ni	125 (**140**)	250 (**280**)	500 (**560**)
Cd	4.4 (**5**)	8.9 (**10**)	17.8 (**20**)

[1] Annual Cd application rate not to exceed 0.44 lb/ac (0.5 Kg/ha)

NOTE: Soil must be maintained at pH 6.5 or above whenever food chain crops are grown unless plant nutrient needs and soil chemistry preclude such values without excessive lime addition, based not on cost but on unrealistic tonnage of lime/acre. In such cases, lime additions suitable to the vegetation used are to be applied in conjunction with annual metal monitoring of the vegetation.

MONTHLY AVERAGE DAYLIGHT HOURS IN UNITS OF 12 HOURS AS A FUNCTION OF LATITUDE FOR THORNTHWAITE POTENTIAL EVAPOTRANSPIRATION

Month	Duration on 15th Day of Month 39° N Latitude*
January	0.81
February	0.8
March	0.99
April	1.10
May	1.19
June	1.24
July	1.22
August	1.15
September	1.04
October	0.93
November	0.84
December	0.79

*Values for 39° N latitude may be used for all latitudes in Delaware

CLIMATOLOGICAL NORMAL TEMPERATURES (Ta) AND THORNTHWAITE POTENTIAL EVAPOTRANSPIRATION FOR THE U.S. WEATHER SERVICE STATIONS IN DELAWARE

Station	January		February		March		April		May		June		July		August		September		October		November		December		Annual
	Ta	PET	Ta	PET	Ta	PET	Ta	PET	Ta	PET	Ta	PET	Ta	PET	Ta	PET	Ta	PET	Ta	PET	Ta	PET	Ta	PET	Total PET
	°F	in	°F	in	°F	in	°F	in	°F	in	°F	in	°F	in	°F	in	°F	in	°F	in	°F	in	°F	in	in
Northern Region																									
Newark University Farm	31.7	0	33.7	0.1	42.1	0.6	52.8	1.8	62.7	3.3	71.2	4.8	75.7	5.4	74.5	4.9	67.9	3.5	56.3	1.9	45.8	0.8	35.6	0.1	27.2
Wilmington WSO AP	31.2	0	33.2	0	41.8	0.6	52.4	1.8	62.2	3.2	71.2	4.8	76.0	5.5	74.8	5.0	67.9	3.5	56.2	1.9	45.6	0.8	35.5	0.1	27.1
Wilmington Porter Resvr	30.8	0	32.6	0	41.0	0.6	51.8	1.7	61.6	3.2	70.4	4.7	74.9	5.3	73.7	4.8	66.9	3.4	55.7	1.9	45.2	0.8	35.1	0.1	26.5
Middletown	31.3	0	34.4	0.1	42.6	0.6	53.2	1.8	63.0	3.3	72.1	4.9	76.0	5.5	74.8	4.9	68.8	3.6	56.9	1.9	46.8	0.8	37.2	0.2	27.7
Southern Region																									
Bridgeville 4 NW	34.3	0.1	36.0	0.1	43.8	0.7	54.2	1.9	63.7	3.4	72.0	4.8	76.2	5.5	74.7	4.9	68.4	3.6	57.4	1.9	47.5	0.9	38.1	0.2	28.0
Dover	34.3	0.1	36.3	0.1	44.2	0.7	54.7	1.9	64.2	3.4	72.7	4.9	77.0	5.6	75.7	5.1	73.0	4.2	58.6	2.0	48.2	0.9	38.5	0.2	29.0
Georgetown 5 SW	34.2	0.1	35.8	0.1	43.5	0.7	53.6	1.8	63.1	3.3	71.5	4.8	76.1	5.5	74.9	4.9	68.4	3.6	57.0	1.9	47.2	0.9	37.8	0.2	27.7
Lewes	34.6	0.1	36.1	0.2	43.3	0.7	53.1	1.8	62.1	3.2	70.7	4.6	75.2	5.3	74.3	4.8	68.4	3.6	57.5	2.0	48.0	0.9	38.5	0.3	27.5
Milford 4 SE	34.3	0.1	35.8	0.1	44.3	0.7	54.4	1.9	63.9	3.4	72.0	4.8	76.5	5.5	75.2	5.0	68.8	3.6	57.7	2.0	47.6	0.9	37.9	0.2	28.2

NOTE: See Definitions Section for definition of Ta and PET

STATE OF DELAWARE
DEPARTMENT OF NATURAL RESOURCES AND ENVIRONMENTAL CONTROL

CLIMATOLOGICAL NORMAL TEMPERATURES (Ta) AND THORNWAITE POTENTIAL EVAPOTRANSPIRATION

ISSUED: JANUARY 2014
REVISED: _____

EXHIBIT - J J

CLIMATOLOGICAL NORMAL PRECIPITATION (P) AND 5-YEAR RETURN PERIOD MONTHLY PRECIPITATION DATA (P5) FOR THE LONG-TERM U.S. WEATHER SERVICE STATIONS IN DELAWARE

Station	January		February		March		April		May		June		July		August		September		October		November		December	
	P	P_5	P	P_5	P	P_5	P	P_5	P	P_5	P	P_5	P	P_5	P	P_5	P	P_5	P	P_5	P	P_5	P	P_5
	inches																							
Northern Region																								
Newark University Farm	2.6	4.4	2.8	4.0	3.4	4.9	3.6	5.0	3.7	5.2	3.9	5.4	4.4	6.4	4.1	6.4	3.8	5.5	3.3	4.7	3.1	4.5	3.6	5.4
Wilmington WSO AP	2.9	4.3	3.1	4.7	3.7	5.1	3.4	4.8	3.6	5.1	3.6	5.0	4.0	5.7	3.6	5.7	3.7	5.6	2.9	4.1	3.2	4.9	3.5	5.2
Wilmington Porter Resvr	3.2	4.7	3.2	4.5	4.0	5.5	4.0	5.6	3.9	5.7	4.2	5.8	4.2	6.3	4.1	6.3	4.0	6.0	3.4	4.7	3.7	5.7	3.8	5.8
Middletown	2.8	4.1	2.9	4.1	3.5	4.9	3.5	4.8	3.4	5.0	3.6	5.3	3.7	5.3	3.4	5.1	3.6	5.5	3.3	4.8	3.2	4.6	3.3	4.9
Southern Region																								
Bridgeville 4 NW	3.4	4.7	3.3	4.5	3.8	5.2	3.3	4.5	3.6	5.2	3.7	5.2	4.1	6.4	4.7	8.0	3.7	5.3	3.3	5.1	3.1	4.5	3.6	5.4
Dover	3.1	4.6	3.0	4.3	3.7	5.3	3.4	4.9	3.6	5.2	3.7	5.2	4.4	7.0	4.5	7.4	4.5	6.8	3.4	5.0	3.3	4.9	3.5	5.2
Georgetown 5 SW	3.3	4.7	3.2	4.4	4.1	5.6	3.2	4.5	3.4	5.0	3.6	5.1	3.9	6.3	5.3	8.2	3.6	5.2	3.5	5.4	3.1	4.6	3.6	5.2
Lewes	3.4	4.8	3.4	4.7	4.2	5.7	3.6	5.1	3.7	5.4	3.7	5.2	4.2	6.3	5.3	8.2	3.3	4.8	3.4	5.0	3.4	4.9	3.8	5.4
Milford 4 SE	3.3	4.7	3.3	4.6	4.0	5.5	3.4	4.8	3.7	5.2	3.7	5.1	4.1	6.6	4.4	7.1	3.9	5.5	3.4	5.1	3.6	4.8	3.7	5.4

NOTE: P = Climatological normal precipitation
P_5 = 5-year return period precipitation

STATE OF DELAWARE
DEPARTMENT OF NATURAL RESOURCES AND ENVIRONMENTAL CONTROL

CLIMATOLOGICAL NORMAL PRECIPITATION (P) AND 5 YEAR RETURN MONTHLY PRECIPITATION (P5)

ISSUED: JANUARY 2014
REVISED: _____

EXHIBIT - K K

Minimum Treatment Requirements for Large Systems *

Parameter	Slow Rate Land Treatment		Rapid Infiltration Basins	Sub-Surface
	Limited Access	**Unlimited Access**		
Biochemical Oxygen Demand	50 mg/l	10 mg/l	30 mg/l	30 mg/l
Total Suspended Solids (TSS)	**50/90 mg/l[1]**	**10 mg/l**	**30 mg/l**	**30 mg/l**
Fecal Coliform	200 Col/100ml	20 Col/100ml	200 Col/100ml	NA
Turbidity	**NA**	**5 TU**	**NA**	**NA**

* These limits may be superseded by a Pollution Control Strategy for specific watersheds

[1] For mechanical treatment 50 mg/l and 90 mg/l for lagoon treatment

STATE OF DELAWARE
DEPARTMENT OF NATURAL RESOURCES AND ENVIRONMENTAL CONTROL

MINIMUM TREATMENT REQUIREMENTS FOR LARGE SYSTEMS

ISSUED: JANUARY 2014
REVISED: _____

EXHIBIT - L L

Large On-Site Wastewater Treatment and Disposal System (LOWTDS)
Performance Standards

1. Requirements for LOWTDS having flows ≥ 2,500 gpd but < 20,000 gpd:
   a. All new systems shall meet a Performance Standard Nitrogen level 2 (PSN2).
   b. All replacement systems within 1000 feet of the Chesapeake Bay tidal waters (as displayed by Exhibit NN) shall meet a Performance Standard Nitrogen level 3 (PSN3).
   c. When the operation permit expires for an existing system within 1000 feet of the Chesapeake Bay tidal waters (as displayed on Exhibit NN), the system must meet a Performance Standard Nitrogen level 3 (PSN3). If the system must be redesigned, the owner or operator of the system will have up to 60 months from the permit expiration date to bring the system into compliance with the new standard.

2. Requirements for LOWTDS having flows ≥ 20,000 gpd:
   a. All new systems shall meet Performance Standard Nitrogen level 1 (PSN1) and Performance Standard Phosphorus level 1(PSP1).
   b. All replacement systems within 1000 feet of the Chesapeake Bay tidal waters (as displayed on Exhibit NN) shall meet Performance Standard Nitrogen level 2 (PSN2).
   c. When the operation permit expires for an existing system, the Department will require the system to meet Performance Standard Nitrogen level 2 (PSN2). If the system must be redesigned to meet PSN2, the owner or operator of the system will have up to 60 months from the permit expiration date to bring the system into compliance with the new standard. **NOTE:** Systems permitted at a higher performance standard will remain at that higher performance standard.
   d. When the operation permit expires for an existing system, and the system location is identified as having high potential for phosphorus mobility, the system must comply with the Performance Standard Phosphorous level 1 (PSP1). If the system must be redesigned to meet PSP1, the owner or operator of the system will have up to 60 months from the permit expiration date to bring the system into compliance with the new standard.

Delaware Parcels Completely Within 1,000 Feet of Chesapeake Bay Tidal Areas

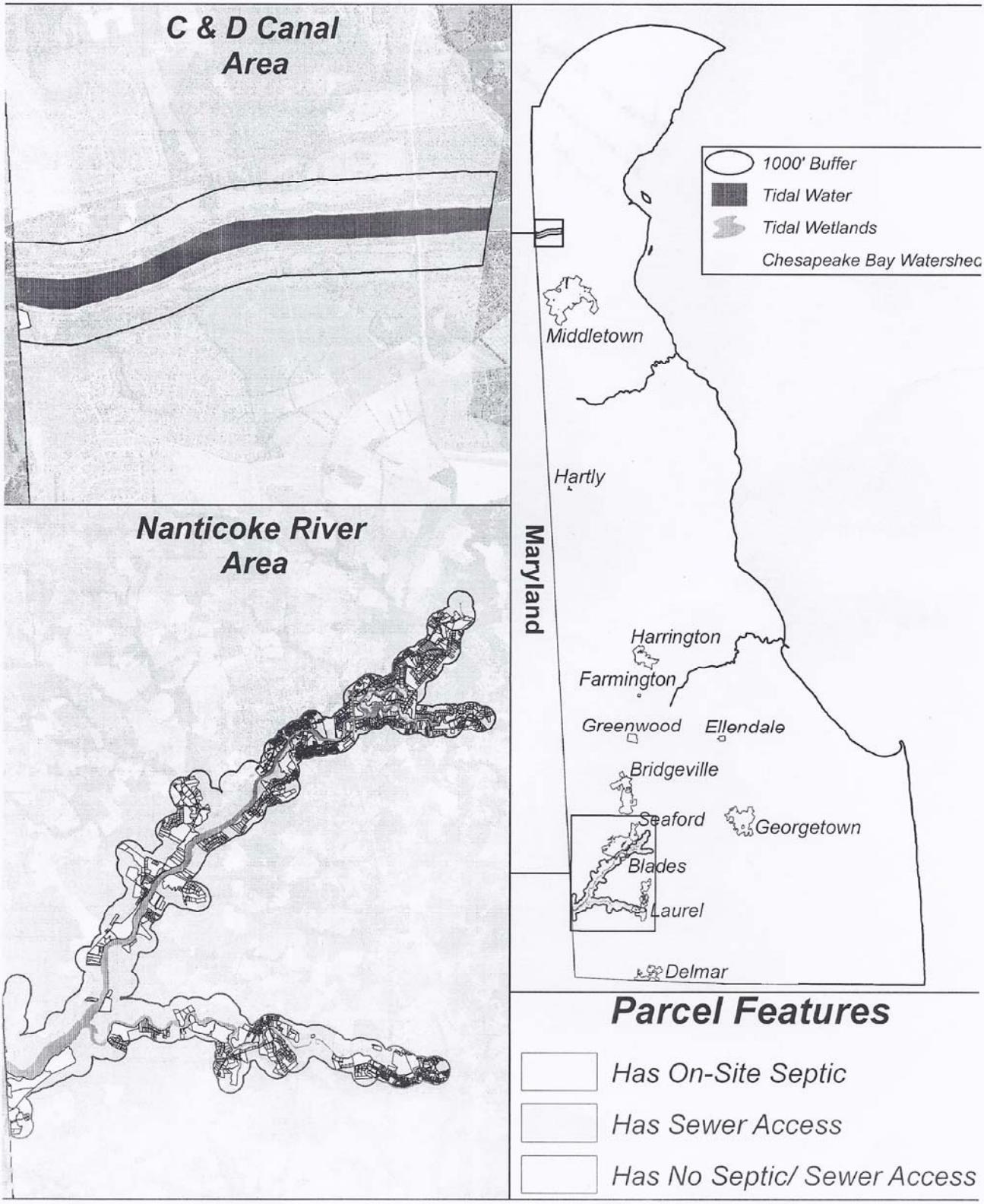

STATE OF DELAWARE
DEPARTMENT OF NATURAL RESOURCES AND ENVIRONMENTAL CONTROL

DELAWARE PARCELS COMPLETELY WITHIN 1,000 FEET OF CHESPAPEAKE BAY TIDAL AREAS

ISSUED: JANUARY 2014
REVISED: _____

EXHIBIT - NN

State of Delaware
DEPARTMENT OF
NATURAL RESOURCES &
ENVIRONMENTAL CONTROL
Division of Water

Attachments to the Regulations Governing the Design, Installation and Operation of On-Site Wastewater Treatment and Disposal Systems

Attachments - *Guidance Documents effective January 2014*

1. Class C Inspection Guidelines
2. Lot Clearing Guidelines
3. Shellfish Waters Guidelines and Map
4. Recycling On-Site Wastewater Treatment and Disposal System Soil and Stone
5. Large System Permitting Process Flow Chart
6. Barricading the Proposed Disposal Area
7. Guidelines for Designing Micro-Irrigation "Drip" Treatment and Disposal Systems
8. Guidelines for Designing Peat Biofilter Treatment and Disposal Systems
9. General Lysimeter Construction and Sampling Guidelines

State of Delaware
DEPARTMENT OF
NATURAL RESOURCES &
ENVIRONMENTAL CONTROL
Division of Water

Class C Inspection Guidelines

January 2014

Perform the following steps:

1. Verify permit has not expired and is valid.
2. Locate the absorption facility and verify the correct location with the approved permit. If the absorption facility location has moved, verify that the new location is within the area approved on the site evaluation and that the new location meets all isolation distance requirements.
3. Verify correct absorption facility measurements to an accuracy of one (1) foot. Verify proper trench/bed depth to the best of your ability. If there is doubt as to the proper depth, contact DNREC and clearly state on the inspection report your findings.
4. Determine the condition and location of major components**.** The tanks, pumps, related equipment, absorption facility and interconnecting pipes must be verified. Verify that all components are installed according to the permit and the Regulations. Compare locations of actual components with the component location on the design.
5. Check the septic tank. The Class E contractor shall insure that the entire top of the tank is clean and visible for inspection. All access lids shall be removed, rotated 45 degrees, and replaced over the openings for safety. The engineer shall visually check the inlet and outlet pipe penetrations, all internal baffles, and the visible conditions of the tank.
6. Grease Traps **-** Same as the septic tank, if applicable.
7. Inspect the dosing chamber(s).(Same as septic tanks) Any access lid weighing over 40 pounds must be removed and replaced with a temporary lightweight cover for inspection (unless contractor personnel is present at the time of the inspection). Verify screened vent pipes and pump lift out device.
8. Verify the dosing chamber components/piping - Ensure correct operation of all components inside and outside of the dosing tank (pump floats, valves, pipes, etc.).
9. Check the operating pressure on all pressurized systems at the distal lateral.
10. Check timer settings. Timers are required to be installed and wired at the time of the inspection. If not installed and wired another inspection shall be scheduled. If power has not been supplied to the site at the time of the inspection, the contractor is to supply a generator as a power source.
11. Check float switches (on/off & alarm). Manually operate floats to verify correct operation. System Contractor to verify float settings are correct. Check high level alarm (audio/visual).
12. Verify that the alarm is installed on a separate electrical circuit.

Class C Inspection Guidelines

13. Verify that all electrical connections outside of the dosing tank are water and corrosion resistant. Verify electrical connections inside the dosing tank are waterproof, corrosion resistant and, if > 500 gpd flow, explosion proof as well.
14. Verify pipe size and configuration. Check for leaks at all visible pipe joints.
15. Check for specified pump or equivalent. The contractor must notify the engineer prior to the inspection if an equivalent pump has been used instead of the pump that had been specified in the design.

16. Verify stone size. Ensure the stone is clean and free of debris.
17. Verify that the system has the proper number of clean-outs, inspection ports, etc.
18. If aggregate-free chamber units are used, verify that they are connected properly.
19. Verify isolation distances as referenced in Exhibit C.
20. Ensure proper abandonment of existing system, if applicable.
21. If well abandonment reports were required, insure proper documentation has been submitted to DNREC and well was properly abandoned.
22. Contractor to provide all equipment, labor & materials required for operationally testing the system.
23. Perform final cover inspection, if necessary (e.g. ESM's, LPP capping fills, etc.).

State of Delaware
DEPARTMENT OF
NATURAL RESOURCES &
ENVIRONMENTAL CONTROL
Division of Water

Lot Clearing Guidelines

January 2014

1. All trees, shrubs and underbrush should be cut by chain saw, bush hog or mower and dragged away without allowing the heavy equipment to enter onto the proposed disposal area.
2. Stumps should be removed by excavator or backhoe from the perimeter of the proposed disposal area without treading onto the area[1]. Small stump grinders can enter the proposed disposal area and are acceptable to be used to remove stumps.
3. The stump holes should be backfilled with native soils and returned to original condition, as practical. Small tractors, bulldozers and skidsteer equipment are acceptable for this purpose.
4. If the system is not to be immediately installed then the proposed disposal area should be seeded to prevent erosion. The area should also be roped or barricaded to prevent any vehicular traffic from entering.
5. During wetter times of the year (December – May), on poorly drained soils and lower landscape positions discretion should be exercised to minimize the threat of compaction and smearing.

* The purpose of these guidelines is to minimize the threat of compaction & to avoid excessive disturbance to the soils within the proposed disposal area.

[1] Stump removal is not required as some systems may be installed with the stumps in place.

State of Delaware
DEPARTMENT OF
NATURAL RESOURCES &
ENVIRONMENTAL CONTROL
Division of Water

Shellfish Waters Guidelines and Map

January 2014

1. As a matter of policy, the isolation distance between a watercourse and an on-site wastewater treatment and disposal system is to be maximized, whenever possible.
2. The isolation distance between an on-site wastewater treatment and disposal system and designated shellfish waters' is to be 100 feet.
3. Designated shellfish waters' are bounded as shown on the map below and described as follows:
   a. The Delaware Bay: East of Rt. 1, Rt. 113 and Rt. 13 from the Maryland State line north to the New Castle County line.
   b. The Inland Bays: Rt. 1, Rt. 24, Rt. 113, Rt. 26, CR 382, CR 389 & CR 396
4. Watercourses that are ephemeral (only contain water during or for a short time after a rain storm event) are <u>not</u> classified as shellfish waters.
5. For the Delaware Bay shellfish area, approval of a lesser isolation distance of 50 feet may be approved by the Department if the lot was created before April 8, 1984.
6. If 100 feet cannot be maintained between an absorption facility and shellfish waters, and the lot was created by plat or deed prior to April 8, 1984, then the maximum distance shall be maintained but in no case be less than shown in the following table.

Modified Isolation Distances (in feet) from Shellfish Waters

	Type of System			
Soil Textures	Gravity(a)	LPP(a)	PD(a)	ESM
Sandy (s, ls) Sand or loamy sand that contain < 50% very fine sand	**100**(b)	**100**	**70**	**50**
Coarse and fine loamy (sl, l, scl) Loamy very fine sand, very fine sand or finer but < 35% clay	**85**	**70**	**60**	**50**
Coarse and fine silty (sil, cl, sicl) Loamy very fine sand, very fine sand or finer but < 35% clay and < 15% fine sand	**70**	**60**(c)	**60**	**50**
Clayey (sc, sic, c) Clay content > 34%	**NA**	**NA**	**50**	**50**

(a) The isolation distance reduction will be dependent upon the clay percentage of the particle size class of the soil, i.e. control section (as defined by Soil Taxonomy)

(b) Permeability rate less than 6 mpi will require pressurization

(c) Design limits above a percolation rate of 45 mpi may necessitate the use of an ESM

Shellfish Waters Guidelines and Map

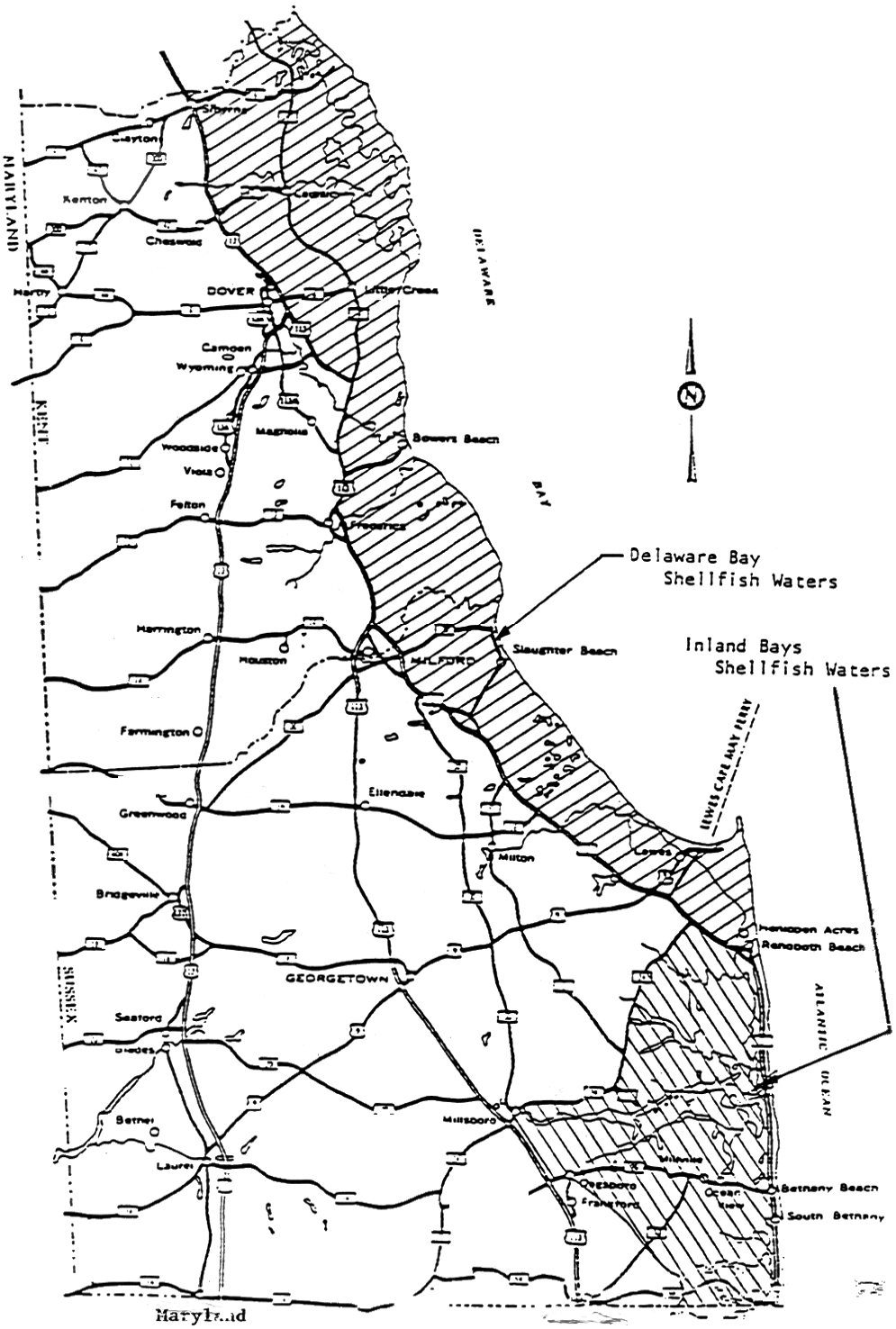

State of Delaware
DEPARTMENT OF
NATURAL RESOURCES &
ENVIRONMENTAL CONTROL
Division of Water

Recycling On-Site Wastewater Treatment and Disposal System Soil and Stone

January 2014

The Department has no objection to the re-use of the soil and stone and hereby approves the material to be in compliance with the requirements of Section 5.4.8.3.
The Department provides the following procedures for recycling septic system soil and/or stone;

1. The system shall be dismantled, removing the soil, stone and piping.
2. The piping must be taken to a landfill for proper disposal.
3. The soil and stone can be segregated or mixed together.
4. The soil, stone or the mixture shall be spread out to dry.
5. It is required that Lime (Calcium Oxide) be spread over the soil, stone or soil/stone mixture for odor control and aid in the killing of the pathogens present. The spreading rate shall be one pound of Lime for every cubic foot of material or one pound of Lime per 100 lbs soil/stone.
6. The soil, stone or soil/stone mixture must be left exposed. Ultraviolet radiation from the sun increases the destruction of pathogens.
7. Once the soil/stone mixture is completely dry it can be used for septic tank, cesspool or other treatment unit abandonment and may be transported off site.

NOTE: This approved procedure for recycling on-site wastewater treatment and disposal system soil and/or stone is limited to the abandonment procedures as stated in Section 5.4.8.3.

State of Delaware
DEPARTMENT OF
NATURAL RESOURCES &
ENVIRONMENTAL CONTROL
Division of Water

Large System Permitting Process Flow Chart

January 2014

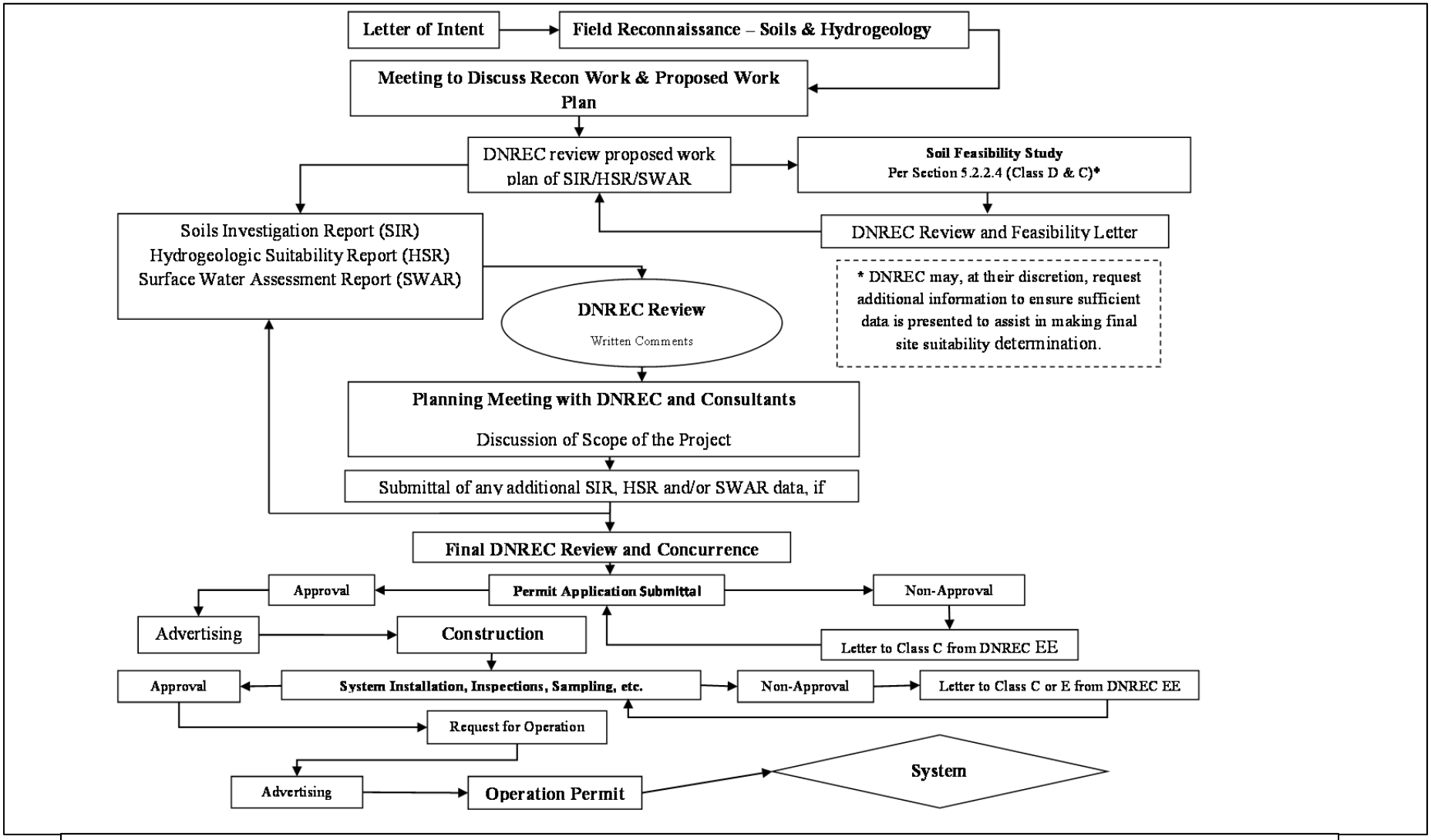

ES - Environmental Scientist **EE** – Environmental Engineer **Hydro** – Hydrologist **PG** – Professional Geologist

State of Delaware
DEPARTMENT OF
NATURAL RESOURCES &
ENVIRONMENTAL CONTROL
Division of Water

Barricading the Proposed Disposal Area

January 2014

1. The need to protect the initial and spare disposal areas prior to system installation is very important to avoid potential problems when installing the absorption facility and post installation.
2. Some problems which occur without barricading or otherwise protecting the proposed disposal area(s) include:
    a. Compaction
    b. Cutting/Filling
    c. Rutting or erosion issues
    d. Staging area/Storage area for equipment or stone
    e. Haul roads or excessive trafficking
3. Results of these problems include:
    a. Premature system failure/malfunction
    b. System type change to include advanced treatment
    c. Sand-lining
    d. Unsuitability for any system type
4. Possible barricading materials include:
    a. Split rail fencing
    b. Post & snow fence
    c. Silt fence (as per County Code, if applicable)
    d. Post & rope
    e. Chain link fence
    f. Post & caution tape (bare minimum method)
5. Example – see pictures

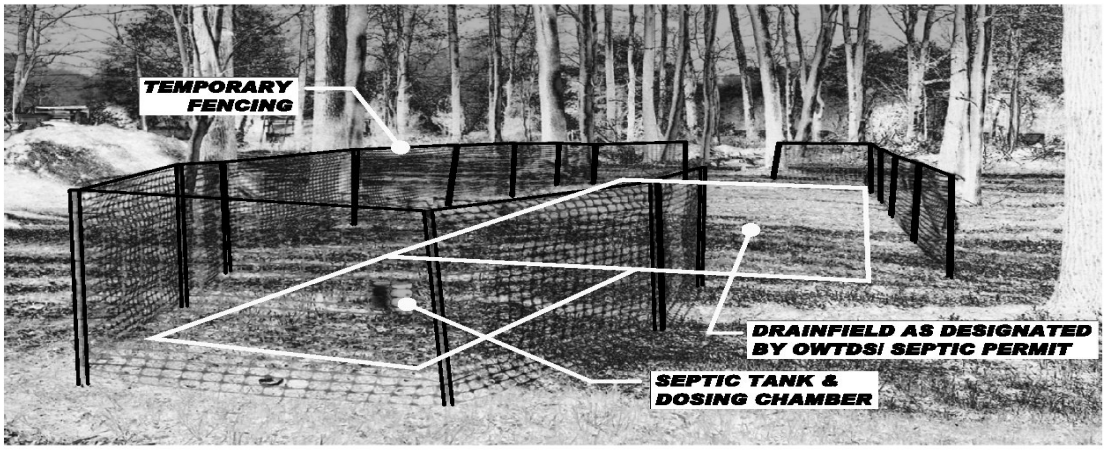

SAMPLES OF TEMPORARY BARRIERS/ BARRICADES FOR OWTDS

State of Delaware
DEPARTMENT OF
NATURAL RESOURCES &
ENVIRONMENTAL CONTROL
Division of Water

Guidelines for Designing Micro-Irrigation "Drip" Treatment and Disposal Systems

January 2014

This guideline will serve as the new directive for micro-irrigation “drip” dispersal criteria and must be adhered to when siting, designing and constructing micro-irrigation “drip” dispersal systems in Delaware, effective January 15, 2010.

** Some design considerations and the subsequent approval will be determined on a case by case basis and in those instances when performance based criteria is utilized.

Design Criteria:

1. Pressure compensating emitters shall be spaced uniformly along the drip line on a maximum of two (2) foot centers and designed to deliver a predetermined flow rate per hour per emitter.
2. All drip systems must be designed to maintain flushing velocities of at least two (2) feet per second at the distal of each drip line during field flushing.

Siting Criteria:

1. Micro-irrigation “drip” dispersal systems are often sited addressing adsorption areas with shallow and/or multiple limitations. Scientists, designers and system contractors need to approach drip dispersal systems appropriate application with due care.
2. Loading rates are to be based on the most restrictive texture within 24” of the surface.
3. For **at-grade systems**, the tillage depths are to be 6 - 8”, although slightly deeper depths may be necessary in the case of shallow thin plow pans or similar restrictive layers within 12” of the surface.
4. For **at-grade systems** on slopes > 5% no sandy fill should be utilized. Tubing should be installed directly onto the scarified surface with a 6” topsoil cap.
5. All replacement **at-grade systems** on slopes > 5% and with a limiting zone < 12” will be addressed on a case by case basis.
6. Landscape position is also a necessary consideration, do not site within a closed depression or where water tends to pond during heavy rainfall events.

New Construction:

Separation requirements;

1. 18” from limiting zone
2. Full Depth installation = 24” limiting zone, 6” trench
3. Surface installation (at-grade systems) = 18 - 22” limiting zones require that 3” sandy fill be added, then place tubing 1” into sandy fill and add 6” topsoil cap (*See Design and Construction Notes for At-Grade Systems).*
   i. ***No advanced treatment required ****
   ii. 12 – 17” from limiting zone **requires advanced treatment**. A 12” separation distance must be maintained from the limiting zone. For limiting zones 12 - 16”, 3” of suitable sandy fill must be added, then place tubing 1” into fill and add 6” topsoil cap.

Replacement System:

Separation requirements:

1. 18" from limiting zone – Same installation parameters as above
2. 12 – 17" limiting zone – Suitable sandy fill added to establish 19" separation, place tubing 1" into sandy fill and add 6" topsoil cap

**** No advanced treatment required unless soil scientist determines otherwise****

3. Less than 12" limiting zone **requires advanced treatment** – Suitable sandy fill added to establish 13" separation, place tubing 1" into sandy fill and add 6" topsoil cap.

Design and Construction Notes for At-Grade Systems

1. Rope off proposed "drip" disposal area.
2. Prepare disposal area when appropriate soil moisture conditions exist (field capacity).
3. Remove vegetation, but do not pull out stumps; do not remove sod, topsoil or rock.
4. Grass, shrubs, and trees must be cut as close to the ground surface as possible and removed, preferably by hand.
5. For wooded lots, with excess litter, we recommend the litter be raked from site.
6. Chisel plow disposal area 6 - 8"deep or as prescribed by soil scientist.
7. Preferred methods
8. Chisel teeth mounted on a backhoe bucket and pulled through surface
9. Chisel plow pulled behind a tractor

******* ROTOTILLERS SHALL NOT BE UTILIZED*******

10. Add 3" of sandy fill and place tubing 1" into sandy fill.
11. Add 6" topsoil cap.
12. To maintain positive drainage additional cover on top may be necessary.

If in doubt, call the GWDS at 739-9948, prior to beginning any construction procedures.

State of Delaware
DEPARTMENT OF
NATURAL RESOURCES &
ENVIRONMENTAL CONTROL
Division of Water

Guidelines for Designing Peat Biofilter Treatment and Disposal Systems

January 2014

This guideline was developed to aide in the siting and design of peat biofilters. Effective September 1, 2005, persons siting, designing, and constructing peat biofilter treatment and disposal systems in Delaware must adhere to the requirements outlined below.

*** Some design considerations and the subsequent approval will be determined on a case by case basis ***

Scope of Use

1. The guideline is intended for facilities generating residential strength wastewater with flows < 2,500 gpd.

Siting Criteria:

1. Peat biofilter systems are not the cure all remedy for problem sites, *do not prescribe as such*.
2. Percolation rates are to be based on the most restrictive texture within the upper 60" of soil. See chart below for loading rate associated with a percolation rate.
3. For **at-grade systems**, the tillage depths are to be 6 - 8", although slightly deeper depths may be necessary in the case of shallow thin plow pans or similar restrictive layers within 12" of the surface.
4. Landscape position is also a necessary consideration; do not site within a closed depression or where water tends to pond during heavy rainfall events.

New Construction and Replacement Systems

Separation requirements:

1. 12" from limiting zone
2. Standard installation = 18 - 22" limiting zone
3. 6 - 8" pad *(bed)depth/10" trench depth
4. Surface installation (At-grade systems) = 12" limiting zone, * **pads only**

Design and Construction Notes for Site Preparation

1. Rope off proposed disposal area
2. Prepare disposal area when soil moisture is within a satisfactory range
3. Remove vegetation - sod, topsoil or rock
4. Grass, shrubs, and trees must be cut as close to the ground surface as possible and removed, preferably by hand from the site
5. For wooded lots, with excess litter, we recommend that it be raked from site
6. Chisel plow disposal area 6 - 8"deep, or as prescribed by soil scientist

Preferred methods

1. Chisel teeth mounted on a backhoe bucket and pulled through surface
2. Chisel plow pulled behind a tractor
3. To maintain positive drainage, additional cover on top may be necessary

Design Considerations

1. A septic tank must precede a peat biofilter system. All septic tanks must incorporate an effluent filter as specified by each individual manufacturer.
2. The loading rates within this memo shall be utilized to determine disposal pad/trench size required.
3. No additional area reductions shall be granted for the use of water saving fixtures or for the use of gravelless chambers.
4. The use of a pad* or trench for disposal shall be based on site characteristics and the individual design engineer.
5. All pads* and trenches shall be installed on contour
6. All pad* areas underneath the open bottom units shall be designed such that the bottom pad* area is level.
7. Peat biofilter systems may be fed by gravity or timed dosed, depending upon site characteristics. System shall be designed to provide equal flow throughout.
8. *All other design considerations shall utilize individual manufacturer's guidelines.*

   * A pad system is synonymous with a bed system

Installation

1. The installer shall be trained by the manufacturer or their designee to install the peat biofilter.

If in doubt, call the GWDS at 739-9948, prior to beginning any construction procedures.

State of Delaware
DEPARTMENT OF
NATURAL RESOURCES &
ENVIRONMENTAL CONTROL
Collin O'Mara, Secretary

General Lysimeter Construction and Sampling Guidelines

January 2014

1. A well permit is required to install a lysimeter, and the installation must be completed, or overseen by a licensed well driller. According to the Delaware Regulations Governing the Construction and Use of Wells (1997), any excavation advanced for the purpose of collecting a water sample in which the excavation is deeper than it is wide is considered a well regardless of whether it intersects the water table.

2. Lysimeters shall be installed in accordance to the manufacturer's instructions, or the ASTM standard D4696.

3. The bottom of the lysimeter(s) must be placed 1.5 feet below the point of compliance for each disposal method as referenced in Exhibit W of the Regulations Governing the Design, Installation and Operation of On-Site Wastewater Treatment and Disposal Systems.

4. The lysimeter(s) must go through a period of testing as prescribed by the manufacturer or ASTM standard to develop the lysimeter(s) and determine the duration of applied vacuum needed to obtain a sample. The sample volume should be commensurate with the manufacturer's specifications, or the ASTM standard.

5. Prior to sample collection the "stagnant" water must be evacuated from the lysimeter and discarded.

6. The vacuum for the "new" water must be applied within one (1) day, minimum, of the scheduled groundwater monitor well sampling, to ensure sampling of the lysimeter(s) and monitor well(s) will be completed on the same day.

    - If the volume of sample collected after the period of applied vacuum established during testing is not representative of the manufacturer's specifications, the lysimeter must be checked for potential vacuum leaks. Once it has been established that the lysimeter is able to maintain a vacuum, a new vacuum must be established and additional sampling performed.

7. Sampling and analysis of the solution must include, but may not be limited to, the following parameters: total nitrogen, total phosphorus, nitrate+nitrite as nitrogen, ammonium as nitrogen, chloride, sodium, and total dissolved solids. Where possible the following field parameters should also include: temperature, specific conductivity, and pH. These parameters are common in most permits; however, if any inconsistencies exist between the permit and these guidelines, the permit must always be utilized.

8. Prior to the required sampling put forth in the permit conditions, at least one (1) background sample must be collected from each lysimeter and analyzed for the parameters identified in the permit.

9. All sampling results must be submitted to the Department with the corresponding field sheets. The field sheets must include the following: DNREC permit number, applied vacuum in centibars, duration of applied vacuum, date of the last day wastewater was applied in the zone of the lysimeter(s), date and time the sample was obtained, and sample volume collected in milliliters.

10. Holding times for the sample begin when the sample is removed from the lysimeter(s).