TIDEWATER ENVIRONMENTAL SERVICES, INC.

SUSSEX COUNTY, DELAWARE

DESIGN REPORT

WANDENDALE REGIONAL WASTEWATER TREATMENT AND DISPOSAL FACILITY

DECEMBER 10, 2010
REVISED JULY 8, 2011

CABE ASSOCIATES, INC.
CONSULTING ENGINEERS
144 S. GOVERNORS AVENUE
P.O. BOX 877
DOVER, DELAWARE 19903-0877
302-674-9280

TIDEWATER ENVIRONMENTAL SERVICES, INC.

SUSSEX COUNTY, DELAWARE

DESIGN REPORT

WANDENDALE REGIONAL WASTEWATER TREATMENT AND DISPOSAL FACILITY

DECEMBER 10, 2010
REVISED JULY 8, 2011

CABE ASSOCIATES, INC.
CONSULTING ENGINEERS
144 S. GOVERNORS AVENUE
P.O. BOX 877
DOVER, DELAWARE 19903-0877
302-674-9280

PROJECT NO. 319-139

TABLE OF CONTENTS

LIST OF EXHIBITS

I EXECUTIVE SUMMARY

II LEGAL DOCUMENTS

III DESIGN BASIS

IV RAW WASTE LIFT STATION

V HEADWORKS

VI FLOW EQUALIZATION BASIN

VII MEMBRANE BIOREACTOR

VIII DISINFECTION

IX DISPOSAL

X SLUDGE DEWATERING

XI AEROBIC DIGESTION

ATTACHMENTS

ATTACHMENT A EQUIPMENT CUT SHEETS

ATTACHMENT B GROUNDWATER MONITORING PLAN

LIST OF EXHIBITS

EXHIBIT I-1	PLANNING AREA
EXHIBIT I-2	CONCEPTUAL PACKAGE PLANT INFORMATION
EXHIBIT II-1	ZONING CERTIFICATE
EXHIBIT II-2	LEASE AGREEMENT
EXHIBIT III-1	INFLUENT CHARACTERISTICS
EXHIBIT IV-1	DESIGN BASIS - RAW WASTE LIFT STATION
EXHIBIT V-1	DESIGN BASIS - HEADWORKS
EXHIBIT VI-1	DESIGN BASIS - FLOW EQUALIZATION
EXHIBIT VII-1	MEMBRANE BIOREACTOR PROCESS DESIGN
EXHIBIT VII-2	PHASED INSTALLATION
EXHIBIT VII-3	MEMBRANE BIOREACTOR DESIGN FEATURES
EXHIBIT VIII-1	PHASE 2 AND 3 UV SYSTEM EQUIPMENT
EXHIBIT VIII-2	DESIGN BASIS - ULTRAVIOLET DISINFECTION
EXHIBIT IX-1	DESIGN BASIS - RIBS
EXHIBIT X-1	DESIGN BASIS - SLUDGE DEWATERING
EXHIBIT XI-1	DESIGN BASIS - AEROBIC DIGESTION

EXECUTIVE SUMMARY

CHAPTER I

I. EXECUTIVE SUMMARY

A. Location

The proposed Wandendale Regional Wastewater Treatment and Disposal Facility is located in Sussex County, Delaware on both sides of both Rt. 24 and Camp Arrowhead Road south of Love C reek with the bulk of the site on the east side of Rt. 24.

B. Purpose

The purpose of the proposed facility is the treatment and disposal, using rapid infiltration basins (RIBs), of treated wastewater from existing neighborhood homes as well as proposed neighborhoods outside of any existing or proposed Sussex County Sanitary Sewer district or Engineering Department Planning Area. The extension of central wastewater systems in this area to serve failing on-site systems and new development will protect the Inland Bays from excessive nutrients.

C. Applicable 2003 Comprehensive Plan - Sussex County Environmentally Sensitive Developing Area Considerations

The proposed facility is located within the Environmentally Sensitive Developing area as defined by the Sussex County Comprehensive Plan currently in effect and is consistent with the Plan as demonstrated by the following excerpts:

- **"Environmentally Sensitive Developing Area can be defined as a Developing District with special environmental design and protection requirement."**

The proposed facility will serve existing, approved neighborhoods as discussed in Section E below, future neighborhoods in the area and has the ability to serve existing, built neighborhoods as well. The Facility has been designed in a fashion that is consistent with or surpasses all DNREC environmental design and protection regulations, and meets the goal to preserve open space.

- **"Public investment is required in these areas to address ground water pollution from failing septic systems and entrophication of the Inland Bays from surface water runoff and point source discharges of wastewater."**

Tidewater Environmental Services, Inc. (TESI) is a bona fide, state regulated wastewater utility company licensed to own and operate those public utilities in Delaware and other states. It is a well capitalized operation owned by Middlesex Water Company, a well capitalized, publicly traded utility company. TESI's wastewater treatment process design will afford control of nutrients with the resulting effluent nitrogen and phosphorus concentrations consistently below those produced by any of the County lagoon treatment facilities. The TESI facility will compliment, but not compete with, the County's wastewater treatment and disposal facility that will serve the Angola Neck Regional Sanitary District.

- **"...DNREC adopted ... regulations ... for ... Total maximum Daily Loads ... These regulations propose significant reductions of nitrogen and phosphorus for the tributaries to the Inland Bays..."**

The proposed facility has been designed in accordance with the On-Site Wastewater Treatment & Disposal System Performance Standards for

Nitrogen & Phosphorus in DNREC's regulations in the Pollution Control Strategy for the Indian River, Indian River Bay, Rehoboth Bay and Little Assawoman Bay.

- **"Extension of the central wastewater system in this area to serve failing on-site systems and new development will protect the Inland Bays from excessive amounts of nutrients."**

  This Provision of the Comprehensive Plan describes the very purpose of the proposed facility in Sussex County's own words.

D. Soils and Hydrogeology

Soils and hyrogeological investigations have been completed on-site and results submitted to the Department for review. Reports submitted include the following:

1. Soil Investigative Report for Community Large On-Site Wastewater Treatment and Disposal for Siting Rapid Infiltration Basins and Site Selection and Evaluation Report for Spray Irrigation for the Lands of Wandendale Farms, Inc. Dated July 23, 2009 prepared by Terra-Firma Consulting, Inc.

2. Hydrogeologic Evaluation for Subsurface Wastewater Discharge Capacity for the The Lands of Wandendale Farms, Inc. Dated September 2009 prepared by Eastern Geosciences, Inc.

3. Basin Infiltration Test Addendum to Hydrogeologic Evaluation for Subsurface Wastewater Discharge Capacity for the Lands of Wandendale Farms, Inc. dated May, 2010 prepared by Eastern Geosciences, Inc.

E. Planning Area

The planning area for the facility is shown on Exhibit I-1. Highlighted on this planning area map are the locations of subdivisions that are anticipated to be connected to this system as they develop. Also shown are conceptual force mains and pumping station locations to convey the wastewater to the facility.

F. Project Phasing

Overview

The detailed soils investigation report and a preliminary groundwater impact assessment illustrate that the proposed RIB area at Wandendale has a capacity of 1.45 MGD. The initial, overall construction permit application will be for 1.45 MGD, for RIB disposal. However, spray irrigation will be implemented in the early phases as described below in this phasing plan.

The treatment facility will be a Membrane Bio-reactor and will be implemented in multiple phases as described below. Treatment capacity will be expanded in increments of 150,000 gpd, except for the last phase, which will be for 100,000 gpd.

Three of the six RIBs (RIBs C, F, and B) shown in the attachment will be built in phases as described below with the land area for the other three reserved as spare capacity until the Design Development Report (DDR) work for the spray sites has been completed and the spray capacity established as stated in phase 5 below. With the three RIBs in place TESI could discharge up to 725,000 gpd and would have 725,000 gpd capacity of spare area available in the other three RIBs. Then after the DDR is approved and the additional spray capacity is available, the other three RIBs can be constructed.

Implementation

Phase 1 - Pump and haul for up to 15,000 gpd. The wastewater will be hauled to a TESI approved facility that is already in operation such as Hart's Landing or Bay Front, where excess capacity exists. It will be treated to Total Nitrogen (TN) of 5 mg/l or less. It is necessary to pump and haul until there is enough flow to start up the first treatment unit which requires approximately 15,000 gpd to operate properly.

Phase 2 - Construct a 150,000 gpd treatment plant (two units of 75,000 gpd each). One unit will be placed into operation (75,000 gpd) once the 15,000 gpd flow is achieved as mentioned in phase 1 above, this is 20% of one of the 75,000 gpd treatment units and will allow proper treatment to meet the pollution control strategy limits as proposed. The 150,000 gpd treatment plant will be an activated sludge, membrane bioreactor preegineered treatment plant (package plant). Exhibit I-2 provides additional information on the anticipated package plant configuration. A single Rapid Infiltration Basin (RIB) will be built at this time, temporarily portioned into six beds and used for disposal of treated effluent. The RIB that will be built is RIB C.

Phase 3 - Place the second 75,000 gpd treatment unit into operation as the flows increase and provide both treatment units with enough flow to perform at design standards. RIB Disposal will continue to be used. This will allow up to 150,000 gallons per day to be discharged to the RIBs. When flow approaches 145,000 gpd (10% of the overall construction permit), TESI will begin spray irrigating as needed on landscaping on the exterior berms of the RIBs. This will be done as an activity not requiring a permit in accordance with Section 3.4.1.10 of the Regulations Governing the Control of Water Pollution.

Phase 4 - Construct an additional 150,000 gpd plant capacity (Total plant capacity

will be 300,000 gpd) to be discharged to RIBs. Another RIB (RIB F) will be built at this time bringing the cell total to 2 of the 6 that will eventually be built.

Phase 5 - Construct an additional 150,000 gpd plant capacity (Total plant capacity will be 450,000 gpd) to be discharged to RIBs. A third RIB (RIB B) will be constructed during this phase. In addition, an irrigation well, tentatively sized at 600 gpm, will be installed in the Columbia formation down gradient from the RIBs to withdraw groundwater and co-mingled treated water. The well will be used for spray on demand for the field closest to the RIB site. The wetted area under the center pivot depicted is 28 acres. Should we elect to use a travelling gun; the spray area can be expanded to a total of 43 acres. Spray from the well will begin after 300,000 gpd flows are reached, so at 20% of the overall 1.45 MGD permitted flow. A Design Development Report (DDR) will be submitted for the agricultural spray areas before flows to the treatment plant reach 450,000 gpd, to demonstrate the full capacity of the Agricultural Spray fields.

Phase 6 - Construct an additional 150,000 gpd plant capacity (Total plant capacity will be 600,000 gpd) to be discharged to RIBs. In addition, infrastructure including storage to spray irrigate treated wastewater onto Spray Area 3 will be in place prior to flows reaching 600,000 gpd. It is anticipated that the irrigation well will still be used to meet peak crop consumptive demands that cannot be met with the volume of treated wastewater available during this phase. Additional RIBs will be constructed during this phase. The total RIB operating capacity at this time shall not exceed the spray area reserve capacity established by the DDR. RIB E will be constructed in this phase.

Phase 7 - Construct an additional 150,000 gpd plant capacity (Total plant capacity will be 750,000 gpd). Spray irrigation on an as needed basis will take place on Spray Area 3 and the excess will go to RIB discharge. In addition infrastructure to spray

irrigate on Spray Area 8 (7.21 acres) must be in place prior to flows reaching 750,000 gpd. RIB D will be constructed in this phase.

Phase 8 - Construct an additional 150,000 gpd plant capacity (Total plant capacity will be 900,000 gpd). Spray irrigation on an as needed basis will take place on Spray Areas 3 and 8 and the excess will go to RIB discharge.

Phase 9 - Construct an additional 150,000 gpd plant capacity (Total plant capacity will be 1,050,000 gpd). RIB A will be constructed in this phase.

Phase 10 - Construct an additional 150,000 gpd plant capacity (Total plant capacity will be 1,200,000 gpd).

Phase 11 - Construct an additional 150,000 gpd plant capacity (Total plant capacity will be 1,350,000 gpd).

Phase 12 - Construct an additional 100,000 gpd plant capacity (Total plant capacity will be 1,450,000 gpd).

EXHIBITS

TIDEWATER
ENVIRONMENTAL SERVICES, INC.
1100 South Little Creek Road
Dover, Delaware 19901

0 2,000 4,000 8,000
Feet
30" x 40" 1 inch = 2,000 feet

Legend

- WTP Projected TESI Regional Wastewater Facility
- PS Projected TESI Pump Stations
- PS Conceptual County Pump Stations
- Active TESI Wastewater Treatment Facilities
- IBseptics_Project
- 4" TESI Sewer Force Main
- 6" TESI Sewer Force Main
- 8" TESI Sewer Force Main
- Conceptual County Sewer Main
- TESI Wandendale Regional Planning Area
- Sussex County Sewer Planning Areas
- Sussex County Angola Neck Sewer District
- Sussex County Inland Bays Plant and Future Expansion Areas
- Wandendale Regional Wastewater Treatment & Disposal Facility
- TESI Service Areas
- TESI CPCNs

TIDEWATER WASTEWATER PLANNING MAPS
WANDENDALE
REGIONAL WASTEWATER TREATMENT AND DISPOSAL FACILITY
SUSSEX COUNTY, DELAWARE

DATE: 12.17.2009
REVISION: R5
MAP NO.: 10-207-08-107

EXHIBIT I-1

Enviroquip

a division of Eimco Water Technologies

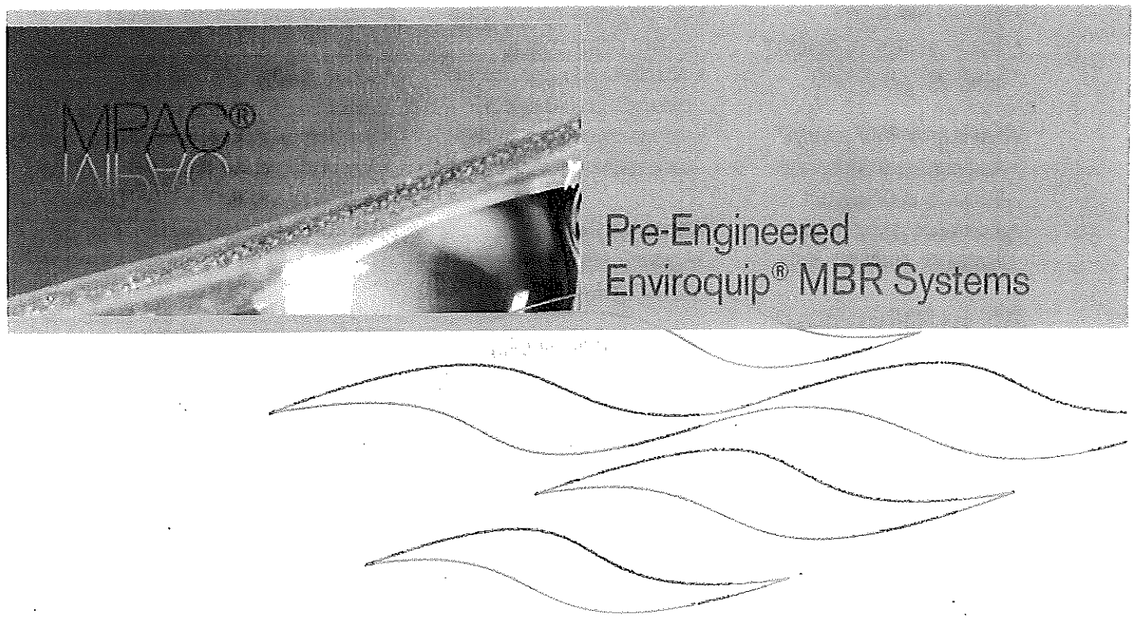

Pre-Engineered Enviroquip® MBR Systems

A GLV COMPANY

EXHIBIT I-2

Why decentralize wastewater treatment?

- High sewer costs
- More cost effective
- Shorter planning horizon
- Reduced odor issues
- Greener approach to treatment
- Sustainable development

What is an MPAC® system?

- A pre-engineered Membrane Bioreactor (MBR) System
- A complete solution to your wastewater treatment needs

Why use MBR technology?

- Reduced, eco-friendly footprint
- Ease of operation and maintenance
- Robust, reliable treatment
- The best available technology for wastewater treatment

Why is the MPAC® system the best solution:

- Modular, pre-engineered designs
- Single-source responsibility (SSR) for complete systems
- Integrates Kubota® membrane products used in over 2,500 installations worldwide
- Comprehensive warranty plans for total system coverage
- Industries leading technical support packages (EQuipTech™)
- Remote operation capabilities comes standard (EQLogix™ SCADA)

Warranty options

- Energy Guarantee (total usage)
- System Warranty (all components)
- Process Warranty (all permit requirements)

EQuipTech™ service plans

Service plans are tailored to meet the needs of each customer and can include:

- Online, real-time 24/7 technical support
- Remote monitoring and optimization
- Access to a network of certified regional technicians
- Reduced field service rates

Treated Effluent Quality		
Parameters	Typical Values	Achievable Values
BOD_5	<2.0 mg/l	Not Detectable
Total Nitrogen (TN)	<10.0 mg/l	<3.0 mg/l
Ammonia (NH_3)	<1.0 mg/l	<0.3 mg/l
Phosphorus (TP)	<1.0 mg/l	<0.03 mg/l
Fecal Coliform	<2.2 CFU/100 ml	Not Detectable
Total Suspended Solids (TSS)	<2.0 mg/l	Not Detectable

providing solutions

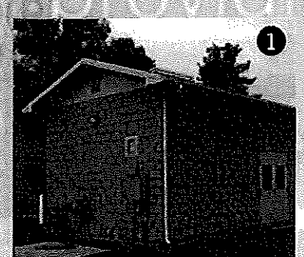

5,000 GPD, CA (1)
Treatment plant completely contained within a building

30,000 GPD, OR (2)
Treatment plant installed in basement of LEED Platinum Certified building

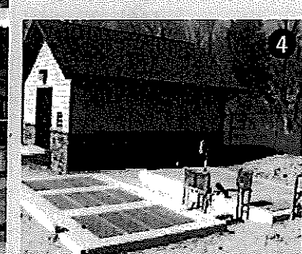

125,000 GPD, TX (3)
Treatment plant installed outdoors for reduced cost and easy access

25,000 GPD, OH (4)
Treatment plant partially enclosed in a building (equipment only)

Hidden in plain sight™

The Enviroquip® MPAC® system is a complete treatment system, combining several operations into one fully functional waste water treatment plant. The MPAC system is ideally suited to a wide range of applications including: Housing Developments, State Parks, DOT Rest Areas, Tribes, Shopping Malls, Golf Courses, Resorts, Casinos, Sewer and Water Districts.

Standard scope

Each MPAC model (LC or HC) comes equipped with all of the components, tankage (steel or concrete) and process zones necessary to form a fully functional state-of-the-art MBR system including:

- ☑ Fine Screening (1)
- ☑ Anoxic Zone (2)
- ☑ Pre-Aeration Zone (3)
- ☑ MBR Zone (4)
- ☑ Equipment Skid (5)
  - Control Panels (EQLogix SCADA)
  - Aeration Systems
  - Recycle and Permeate Pump Systems

Options

Depending on the specific needs of an application, several options are available to tailor the capabilities of an MPAC system. These options include:

- ☐ Winterization Packages
- ☐ Screening Pre-treatment
- ☐ Equalization Systems (6)
- ☐ Chemical Dosing Systems
- ☐ Permeate Disinfection
- ☐ Waste Solids Storage and Handling (7)

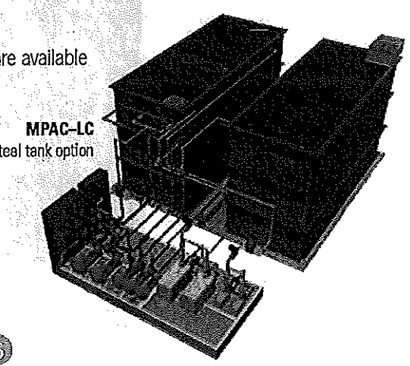

MPAC–LC
Steel tank option

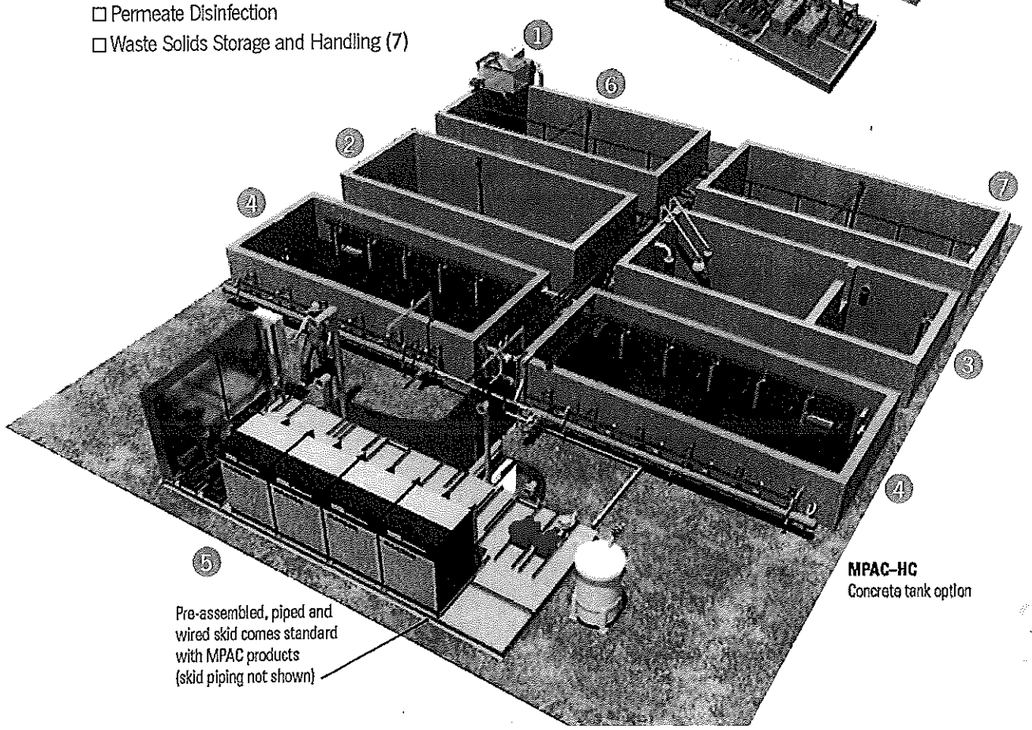

MPAC–HC
Concrete tank option

MPAC systems can be Hidden in plain sight™

"After operating conventional plants for over 20 years, I'm still amazed at the consistently high effluent quality produced by the MPAC system." –Bob Thurston, Operator

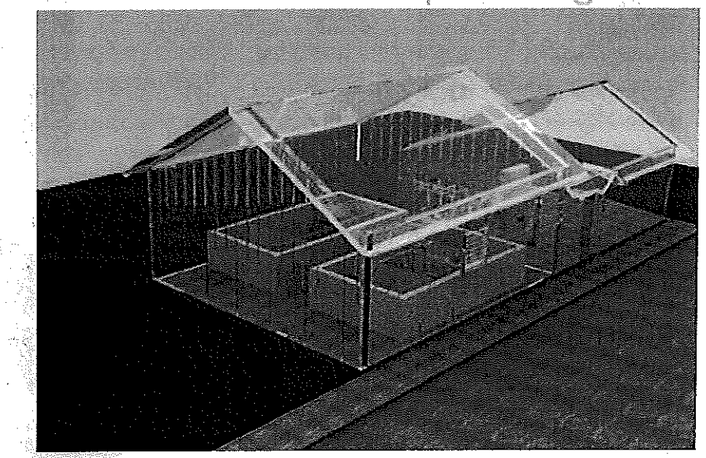

Is an MPAC system right for my project? Yes.

- ☑ Fast delivery
- ☑ Complete scope of supply
- ☑ One number to call for service and support
- ☑ Easy to operate and maintain
- ☑ The best available technology for wastewater treatment
- ☑ Approved for reuse applications

Enviroquip

a division of Eimco Water Technologies

© Copyright 2008 GLV. All rights reserved.–1008
Kubota® is a registered trademark owned by the Kubota Corporation.

For more information: www.glv.com • info.ewMBR@glv.com • Tel: 512.834.6000

LEGAL DOCUMENTS

CHAPTER II

II. LEGAL DOCUMENTS

A. Sussex County Zoning

The proposed facility is currently zoned AR-1, Agricultural Residential District with no change of zone proposed. A Conditional Use Permit for the facility was granted on July 1, 2009. A copy of the Zoning Certificate is included as Exhibit II-1. Final site plan approval is pending.

B. Lease Agreement

A copy of the lease agreement between TESI and Wandendale Farms, Inc. Is provided on Exhibit II-2.

EXHIBITS

EVIDENCE OF LOCAL ZONING AND PLANNING APPROVAL

RECEIVED
JUL - 6 2009

I, Lawrence B. Lank, for Sussex County Planning and Zoning
(Name of County, City of Town)

do hereby affirm that the project proposed by Tidewater Enviromental Services, Inc.
(Name of Applicant)

located at (see attached sheets), in
(Address)

the AR-1 Agricultural Residential District zoning district is in

full compliance with the zoning code as it applies to this project. (See attached findings of fact @ Conditional Use No. 1792 (Ordinance No. 2019)

The above named applicant's project is in compliance with the adopted comprehensive development plan for the geographic area within which the project will be located.

Lawrence B. Lank
(Signature)

Director of Planning and Zoning
(Title)

7.1.09
(Date)

This part is essential for a complete Coastal Zone Act Permit Application. No application will be considered administratively complete without it. While the applicant is strongly advised to use this form, the local zoning jurisdiction may utilize a different form or document to demonstrate "evidence of local zoning approval," provided such documents are signed and dated by the proper official.

EXHIBIT II-1

EVIDENCE OF LOCAL ZONING AND PLANNING APPROVAL
FOR
COASTAL ZONE APPLICATION
(Continued)

Property Location:

Parcel 2-34-11.00-48.00
Located approximately 1775 feet from the intersection of Jolyns Way (Cty. Rd. 289) and John J. Williams Highway (SR 24). Bounded on the west side by Robbinsville Road (Cty Rd. 277). On the east side by John J. Williams Highway (SR 24). On the south side by a drainage ditch.

Parcel 2-34-11.00-50.00
Located approximately 1775 feet from the intersection of Jolyns Way (Cty. Rd. 289) and John J. Williams Highway (SR 24). Bounded on the west side by John J. Williams Highway (SR 24). On the east side partially by. On the north side partially by Jolyns Way (Cty. Rd. 289) .

Parcel 2-34-7.00-127.00
Located on the northwest corner of the intersection of Jolyns Way (Cty. Rd. 289) and Arrowhead Road (Cty. Rd. 279).

Parcel 2-34-7.00-130.00
Located on the east side of the intersection of Jolyns Way (Cty. Rd. 289) and Arrowhead Road (Cty. Rd. 279). Bounded on the north side by the Love Creek Woods Subdivision. On the west side by Love Creek. On the east side by Arrowhead Road (Cty. Rd. 279).

EVIDENCE OF LOCAL ZONING AND PLANNING APPROVAL
FOR
COASTAL ZONE APPLICATION
(Continued)

District	Map	Parcel	Hundred	Square Area
2-34	11.00	48.00	Indian River	48.53 Ac +/-
2-34	11.00	50.00	Indian River	147.74 Ac +/-
2-34	7.00	127.00	Indian River	29.17 Ac +/-
2-34	7.00	130.00	Indian River	94.77 Ac +/-

ORDINANCE NO. 2019

With Conditions

AN ORDINANCE TO GRANT A CONDITIONAL USE OF LAND IN AN AR-1 AGRICULTURAL RESIDENTIAL DISTRICT FOR A REGIONAL WASTEWATER COLLECTION, TREATMENT AND DISPOSAL FACILITY TO BE LOCATED ON A CERTAIN PARCEL OF LAND LYING AND BEING IN INDIAN RIVER HUNDRED, SUSSEX COUNTY, CONTAINING 320.21 ACRES, MORE OR LESS

WHEREAS, on the 16th day of April 2008, a conditional use application, denominated Conditional Use No. 1792 was filed on behalf of Tidewater Environmental Services, Inc; and

WHEREAS, on the 26th day of June 2008 a public hearing was held, after notice, before the Planning and Zoning Commission of Sussex County and on the 28th day of August 2008, said Planning and Zoning Commission recommended that Conditional Use No. 1792 be approved with conditions; and

WHEREAS, on the 22nd day of July 2008 and the 9th day of December 2008, public hearings were held, after notice, before the County Council of Sussex County and the County Council of Sussex County determined, based on the findings of facts, that said conditional use is in accordance with the Comprehensive Development Plan and promotes the health, safety, morals, convenience, order, prosperity and welfare of the present and future inhabitants of Sussex County, and that the conditional use is for the general convenience and welfare of the inhabitants of Sussex County.

NOW, THEREFORE, THE COUNTY OF SUSSEX HEREBY ORDAINS:

Section 1. That Chapter 115, Article IV, Subsection 115-22, Code of Sussex County, be amended by adding the designation of Conditional Use No. 1792 as it applies to the property hereinafter described.

Section 2. The subject property is described as follows:

ALL that certain tract, piece or parcel of land, lying and being situate in Indian River Hundred, Sussex County, Delaware, and lying on both sides of Route 24 (John J. Williams Highway), southeast of Road 277 (Robinsonville Road), both sides of Road 289 (Jolyns Way) and both sides of Road 279 (Camp Arrowhead Road) and being more particularly described in the legal description provided by Charles D. Murphy Associates, Inc. and being four (4) parcels containing a total of 320.21 acres, more or less.

This Ordinance shall take effect immediately upon its adoption by majority vote of all members of the County Council of Sussex County, Delaware.

This Ordinance was adopted subject to the following conditions:

1. All improvements for collection, treatment and disposal of sanitary waste shall be constructed and maintained in accordance with the requirements of the Sussex County Engineering Department, if any, or the Delaware Department of Natural Resources and Environmental Control, and any other governmental agency with jurisdiction over the use of the site, or any modification thereto.

2. The Applicant shall submit to the Sussex County Engineering Department, a regional plan that shows all the areas and/or subdivisions to be served by the wastewater treatment and disposal facility. Said plan shall include technical support that demonstrates that capacity exists at the treatment and disposal facility to serve the areas and/or subdivisions.

3. The facility shall not receive sanitary waste for treatment and disposal from any property or parcel that is located within a Sussex County sewer planning area or sewer district; excepting there from those properties or parcels which are currently being served by other Tidewater Environmental Services, Inc. treatment and disposal facilities or approved for service as evidenced by a CPCN being issued by the Public Service Commission on or before the adoption of this conditional use ordinance.

4. The Final Site Plan shall be subject to review and approval by the Sussex County Planning and Zoning Commission.

5. Irrigation Lagoon "A", the lagoon pumping station, the headwork's building, the control building, the biological treatment tanks, and the emergency generator shall be relocated to the east of Rapid Infiltration Basins Area A on Sussex County Tax Map Parcel No. 2-34-11.00-50.00. The vacated area on Tax Map Parcel No. 2-34-11.00-48.00 may be used as a spray area.

6. The buildings shall appear to be agricultural buildings. With the exception of emergency generators, holding and treatment tanks that may be located on the site, all other equipment needed in the operation of the facility shall be located indoors. The generators shall be housed in enclosures to reduce noise.

7. Any security lighting shall be screened so that it does not shine onto neighboring properties or public roads.

8. A minimum 50 foot un-forested buffer will be maintained around all spray irrigation areas.

9. A minimum 50 foot forested buffer will be maintained around the Midway Baptist Church.

10. This regional facility shall make its services available for any failing septic system in its proposed service areas.

11. Any lagoons, rapid infiltration basins, spray irrigation systems or similar structures shall be located at least 50 feet from any dwelling.

12. One lighted sign shall be permitted on the site containing the treatment buildings, not to exceed 32 square feet in size. Unlighted signs, not to exceed 32 square feet in size shall be permitted on other parcels that are part of this application.

13. Perimeter fencing around the control building, headwork's building, lagoon pumping station, treatment and holding tanks, irrigation lagoons "A" and "B", and rapid infiltration bed areas "A" and "B", will be visibly screened from neighboring properties and roads through the use of native species trees.

14. The Final Site Plan shall include a landscaping plan to include all proposed buffers.

I DO HEREBY CERTIFY THAT THE FOREGOING IS A TRUE AND CORRECT COPY OF ORDINANCE NO. 2019 ADOPTED BY THE SUSSEX COUNTY COUNCIL ON THE 9TH DAY OF DECEMBER 2008.

ROBIN A. GRIFFITH
CLERK OF THE COUNCIL

The Council found that the Conditional Use was appropriate legislative action based on the following findings of fact:

1. This is a Conditional Use application in an AR-1 Agricultural Residential District for a regional wastewater collection, treatment and disposal facility to be located on 320.21 acres of land lying and being in Indian River Hundred on the south side of State Route 24, southeast of County Road 277 and abutting County Roads 279 and 298 in Indian River Hundred, Sussex County, Delaware.

2. The subject properties are owned by Wandendale Farms, Inc. and are leased to the Applicant under a long term lease dated September 14, 2007.

3. Tidewater Environmental Services, Inc. has agreed with Wandendale Farms, Inc. to lease, occupy and use parcels of land located in Indian River Hundred identified on the Tax Maps of the Sussex County Department of Finance as T.M. No. 2-34-11.00-48.00 (48.53 a. +/-); T.M. No. 2-34-11.00-50 (147.74 a. +/-); T.M. No. 2-34-7-127 (29.17 a. +/-); and T.M. No. 2-34-7.00-130 (94.77 a. +/-).

4. The sites are presently used for agricultural purposes or are wooded.

5. The Conditional Use is for this facility to be available regionally to serve projects and customers within its certificated areas as may be required by the Public Service Commission or who otherwise become interested in connection.

6. Tidewater Environmental Services, Inc. has applied for and/or acquired Certificates of Public Convenience and Necessity to serve several certificated parcels in the region and has or will have its tariffs approved by the Public Service Commission.

7. Concerns raised by adjoining property owners, including the fire company and residential developments, as to the location of the lagoon and treatment facilities, such as traffic, noise, odor, etc. have been addressed by relocating these facilities to the east of Route 24.

8. This application is appropriate at the subject sites because it is in an area of development where regionalized wastewater treatment is not otherwise available to all properties or projects.

9. The granting of this application will provide a regionalized wastewater collection, treatment and disposal facility that will safely serve the communities and will not harm the environment.

10. The Conditional Use requested will promote the health and safety of the inhabitants of Sussex County and nearby properties' projects that have been or will be approved for development.

11. The application conforms to the Comprehensive Land Use Plan in that:

- The regional wastewater facility will reduce the level of nutrients entering the inland bays;
- The regional wastewater facility will recharge the aquifer;
- The regional wastewater facility will cause no harm to area wells;
- The regional wastewater facility will reduce aquifer withdrawal;
- The regional wastewater facility will be available to replace failing septic systems in its service areas;
- The regional wastewater facility will preserve agricultural uses in the area;
- The regional wastewater facility will preserve open space and forest land.

12. Subject to the fourteen (14) conditions, this regional facility will not conflict with any proposed Sussex County service or planning area.

13. Based on the record and recommendation of the Commission and the findings of Council, the Conditional Use was approved subject to the fourteen (14) conditions, which will serve to minimize any potential impacts on the surrounding area.

LEASE AGREEMENT

THIS LEASE AGREEMENT, entered into this 14th day of September, A.D. 2007

BY AND BETWEEN

WANDENDALE FARMS, INC., a Delaware Corporation at 821 Savannah Road, Lewes DE 19958, (hereinafter referred to as the "Lessor").

AND

TIDEWATER ENVIRONMENTAL SERVES, INC. ("TESI"), a Delaware corporation at 1100 South Little Creek Road, Dover DE 19901, (hereinafter referred to as "Lessee")

1. LEASED PROPERTY: Lessor agrees to lease to Lessee several tracts of property, hereinafter referred to collectively as "Property" as more particularly set out in Exhibit "A" attached hereto and made part hereof and as shown on Exhibit "B".

2. TERM: The Property shall be leased for a term of forty (40) years beginning on October 1, 2007, and ending on September 30, 2047 TESI has the option to renew for an additional 10 year period based on the terms contained herein. If TESI wishes to exercise this option they shall notify Lessor in writing at least 12 months prior to the expiration of the original 40 year period. If TESI exercises the first ten (10) year option, this Lease shall automatically renew for ten (10) year renewal periods thereafter unless written notice to terminate is given by either party to the other, at least sixty (60) months prior to the beginning of the succeeding renewal lease period. The term "Lease Period" as used herein shall mean the ten (10) year period beginning with the first day of

the first lease period after the first 40 year term and each successive ten (10) year period thereafter during the term of this Lease.

3. **PURPOSE:** The Property may be continuously occupied and used during the term of the Lease by Lessee for the purpose of the collection, treatment, and disposal of treated sanitary wastewater (effluent) on the Property by means of spray irrigation, drip disposal and/or rapid infiltration basins (RIB's), or by such other means of disposal of treated sanitary wastewater (effluent) as Lessee may select in its sole discretion, provided that such other means of disposal of effluent is in accordance with the standards of the State of Delaware. Lessor expressly retains all hunting, fishing, trapping, agricultural, and mineral rights to the Property and Lessee shall have no such rights upon the Property. Specifically, Lessor shall have the right to plant, till, and cultivate suitable crops and to retain the profits from said planting, tilling, and cultivation. Lessor's activities shall not interfere with the collection, treatment and disposal of treated sanitary waste (effluent) on the leased Property, provided Lessee's effluent is treated to the Standards of all applicable State, Federal and Local Laws.

4. **TREATED EFFLUENT PUMPING:** Lessee shall install at its expense pipeline, mains, pumps, irrigation equipment and other apparatus on Lessor's Property for the purposes of collection, treatment and disposal by means of spray irrigation practices as set forth herein. Lessee agrees to install at Lessee's cost an influent flow meter on the main line transmitting raw waste onto the Property and into the treatment plant. Lessor has the right to review and approve the meter location and the approval shall not be unreasonably withheld.

The Lessee agrees to provide Lessor with quarterly reports showing the gallons transmitted through the influent flow meter. Lessee must obtain all necessary Federal, State, and local approvals to allow for pumping up to the Property's boundaries. Lessee agrees to ensure that the wastewater treatment plant will meet and not exceed its permit limitations for treated effluent Lessee agrees to assume sole responsibility for all maintenance to the Property's irrigation system. Lessor agrees to provide all fertilizer and pH adjustment and related treatments or supplements, as required to maintain the soil and groundwater in accordance with all Standards of the State of Delaware and Sussex County as may be applicable under the circumstances, including nutrient management.

5. RENT. For the term of this lease, Lessee shall pay to Lessor rent, calculated as follows.

****

REDACTED

Private Financial Terms

****

****

REDACTED

Private Financial Terms

****

****

REDACTED

Private Financial Terms

****

5. LATE CHARGES: Rent paid more than fifteen (15) days after the due date shall be subject to a late charge of Five Percent (5%).

6. TERMINATION OF LEASE ON TOTAL OR PARTIAL CONDEMNATION: If at any time during the term of this Lease, the whole of the Property shall be taken for any public or quasi-public use under any statute or by right of eminent domain, then and in such an event, when possession of the Property shall be taken by the condemning authority, the term hereby granted and all rights of Lessee hereunder shall immediately terminate. In the event of any partial condemnation, Lessee may elect to terminate this Lease or to continue to lease the remaining acreage. In the event Lessee elects to terminate this Lease, the rent shall be apportioned and paid at the time of such termination. Lessee may file such claims against the condemning authority as

are permitted by law for the loss of its leasehold interest, business dislocation damages, moving expenses or other damages caused by such taking or appropriation. In the event Lessee elects to continue to lease the remaining acreage after a partial condemnation, the rent shall be recalculated on a pro rata basis based on the total amount of land remaining after condemnation.

7. ASSIGNMENT: Lessee shall not assign, sublet, mortgage or pledge this Lease, nor permit the whole or any part of the premises to be occupied by others without the prior written consent of Lessor. Lessee may enter into cooperative agreements with other private entities or governmental agencies for the collection, treatment and disposal of sanitary waste on the leased Property without consent of the Lessor.

8. INDEMNIFICATION OF LESSOR BY LESSEE: Lessee covenants and agrees to indemnify and save harmless Lessor from any and all claims, demands, and losses that (1) arise from Lessee's use and occupancy of the Property or Lessee's performance of, or failure to perform Lessee's obligations under this Lease, including any failure to comply with any pertinent Federal, State or local law, statute, regulation, and/or rule; or (2) are caused wholly or partially by any act, omission, negligence or willful misconduct by Lessee, its agents, employees, contractors, subcontractors, licensees, or invitees; or (3) arise from any environmental conditions or environmental claims.

9. INDEMNIFICATION OF LESSEE BY LESSOR: Lessor covenants and agrees to indemnify and save harmless Lessee from any and all claims and

demands for damages to persons or property suffered on account of the faults or omissions of Lessor or anyone acting for or on behalf of Lessor, or arising from the violation of any law or ordinance by Lessor or anyone acting for or on behalf of Lessor, arising out of Lessor's use and occupancy of the Property during the term of this Lease

10. **INSURANCE:** Lessee shall maintain appropriate general liability insurance coverage covering the Property, naming Lessor as an Insured. The coverage limits shall be a minimum of $500,000.00 for property damage and $1,000,000.00 per claim and $3,000,000.00 aggregate for personal injury. Such policy shall also cover Lessee's duty to indemnify Lessor as set forth herein.

11. **ENTRY:** Lessee acknowledges that Lessor or other entities owned by or under contract with Lessor may occupy and use portions of the leased property for agricultural purposes. Such use shall comply with all applicable permits, laws, ordinances, rules, and regulations of any governmental agency with jurisdiction over the leased property and its proposed use. In addition, the Property along with other property owned by Lessor but not subject to this Lease is actively hunted and shall continue to be actively hunted throughout the term of this Lease by Lessor and Lessor's agents, invitees and guests. By executing this Lease, Lessee acknowledges this use of the Property and shall minimize any interference with said use.

12. **POSSESSION:** Possession will be given on the beginning date of this Lease.

13. TAXES: Lessor shall be responsible for payment of all property taxes assessed on the Property. Provided however, that any increase in taxes or assessment arising out of Lessee's use and occupancy of the Property shall be paid by Lessee. The parties shall take all reasonable steps necessary to maintain the assessment of the Property under State Farmland Assessment. Any rollback taxes applied to the Property shall be divided evenly between the Lessor and the Lessee.

14. SEVERABILITY: In the event any part of this Lease is declared invalid by a court, the remaining portion shall remain in full force and effect

15. NOTICES: All notices required or permitted herein must be in writing and may be delivered in person or by mailing to the addresses shown herein or to the address of the Property for Lessee and/or Lessor whichever is applicable, by registered or certified mail, or by overnight delivery service where proof of delivery and date of delivery is provided. Such notices shall be deemed to be delivered as of the date of posting, whether actually received or not.

16. LESSEE'S RIGHTS AND OBLIGATIONS: In addition to Lessee's rights as set forth elsewhere herein, Lessee shall have the following rights:

a To access the Property to allow full use and occupation of the Property for uses permitted hereunder. It is hereby agreed and understood that such entry onto the retained lands shall minimize interference with Lessor's use and occupancy of the retained lands.

b. In addition to Lessee's obligations as set forth elsewhere herein, Lessee shall conduct all treated effluent pumping operations on the Property in accordance with all applicable laws, rules and regulations, and in conformity with accepted practices in the treated effluent pumping industry.

c. Furthermore, Lessee shall utilize the acreage occupied by spray irrigation in accordance with Best Management Practices in the industry to mitigate against adverse impacts upon Lessor's (or Lessor's agricultural tenants') contemporaneous farming operations on the Property. Lessor and Lessee agree to cooperate with one another in this regard.

17. **EVENTS OF DEFAULT - CURE.** Upon any breach by Lessee of any of the terms and provisions hereof, the Lessor may, at its option, serve a notice, in writing upon the Lessee, by Certified Mail, Return Receipt Requested, addressed to Lessee at the foregoing Post Office address thereof, setting forth the nature and extent of any breach by the Lessee of any of the terms and provisions hereof. Upon the receipt of such notice, it shall be the duty of the Lessee, within thirty (30) days thereafter, to correct and repair any such breach by Lessee of any of the terms and provisions hereof. In the event that Lessee shall fail or neglect to correct and repair the same within such period of time, or fails to demonstrate that reasonable steps are being taken to correct or cure such breach which cannot be corrected or cured with such 30 day period, then this Agreement shall become null and void and Lessee shall thereupon vacate and surrender unto Lessor the full and complete possession of all the Property

hereby demised unto the Lessee peacefully and without any further delay whatsoever with no refund of money paid.

18. **ASSIGNMENT; BINDING EFFECT; BENEFITS:** Neither this Agreement nor any right, obligation or liability arising hereunder or by reason hereof shall be assignable by Lessee without the prior written consent of Lessor. This Agreement shall be binding upon and inure to the benefit of the parties to this Agreement and their respective heirs, successors, assigns, and personal representatives. Nothing expressed or referred to in this Agreement is intended as or shall be construed to give any person other than the parties hereto or their respective heirs, successors, personal representatives and assigns any legal or equitable right, remedy, or claim under or in respect of this Agreement or any provision contained herein, it being the intention of the parties hereto that this Agreement is for the sole and exclusive benefit of such parties or such heirs, successors, personal representatives and assigns and for no other persons.

19. **PURCHASE OFFER:** In the event that Lessor receives a bona fide offer for the purchase of the Property which Lessor wishes to accept, whether solicited by Lessor or presented to Lessor without solicitation, Lessor shall give Lessee notice of such offer by certified mail and the terms thereof. Within thirty (30) days thereafter, Lessee shall notify Lessor whether it wishes to purchase the Property on the same terms offered. In the event that Lessee gives notice that it intends to purchase, settlement on Lessee's purchase shall occur in accordance with the terms of the offer. In the event Lessee elects not to purchase in accordance with such terms, Lessor may convey the Property to such third

person in accordance with such terms free and clear of this right to first refusal, provided, however, that if settlement does not occur on such offer, this right of first refusal shall remain in force and effect. In the event Lessor sells all or a portion of the Property that is the subject hereof, any subsequent purchaser of the Property shall take title thereto subject to the terms and conditions of this Lease.

20. WAIVER/ AMENDMENT: Either Lessor or Lessee may, only by written notice to the other, (a) extend the time for the performance of any obligations or other actions of the others under this Agreement; (b) waive any inaccuracies in this Agreement or any document delivered pursuant to this Agreement; (c) waive compliance with any of the conditions or covenants or the others contained in this Agreement; and/or (d) waive or modify performance of any obligations of the other under this Agreement. The waiver by any party of a breach of any provision of this Agreement shall not operate or be construed as a waiver of any subsequent breach of this same provision or any other provision of this Agreement. This Agreement may not otherwise be amended, modified, rescinded, supplemented orally and no amendment, modification, waiver recession or supplementation shall be valid unless in writing and signed by all of the parties to this Agreement.

21. ENTIRE AGREEMENT: This Agreement constitutes the entire Agreement between Lessee and Lessor with respect to the subject matter hereof.

22. REPORTS. Lessee agrees to simultaneously provide Lessor with copies of all reports or other documentation given to or received from DNREC or any other State, Federal or local agency concerning uses under this Lease, as requested by the Lessor. Such documentation shall include, but not be limited to, soils tests and reports, effluent pumping and treatment volumes, violations, notices and gallons registered on the influent meter described in Section 4 herein.

23. LAW GOVERNING: This agreement shall be subject to the laws of the State of Delaware and to all other applicable permits, laws, ordinances, rules, and regulations of any other governmental agency with jurisdiction over the leased property and its proposed use.

24. HEADINGS: The headings of the paragraphs are for convenience only and are not part of this Agreement

25. NO CONCLUSION AS TO DRAFTER: This Agreement is the product of the parties hereto and no conclusion shall be drawn as to its drafter in the event of any dispute.

26. SCREENING. All wastewater plant, treatment and disposal areas (but not including spray irrigation pivot rigs) and outside storage areas shall be screened from view of Lessor's properties that are not the subject of this Lease and all neighboring and adjacent properties. The screening shall consist of trees and/or other vegetation suitable to Lessor to accomplish a visual screen. In addition, all structures shall have an agricultural appearance and all RIBS and lagoons shall maintain as close to a natural appearance as practically possible.

27. COUNTERPARTS: The parties may execute this Agreement in counterparts and each counterpart shall be deemed an original.

28. WAIVER OF JURY TRIAL: The parties to this Agreement agree to waive their rights to demand a jury trial in any action which may be brought to enforce any portion of this Agreement.

29. CONNECTIONS. Lessee shall waive connection fees for up to 10 dwellings to Lessee's wastewater treatment system for Lessor. This obligation shall be limited to dwellings that exist or may be constructed on property owned by Lessor at the time of execution of this Lease, including lands not identified as Property on Exhibit A attached hereto. The dwellings must be within two hundred feet of infrastructure to serve them. For example, if the home is 1,000 feet from a collection line, TESI will waive the connection fee, but Lessor must install infrastructure to get to TESI's infrastructure. This paragraph is subject to the PSC approving a CPCN for the properties.

30. SUBORDINATION OF LEASE: This Lease shall be subject and subordinate to any mortgage that is now on or affects the Property or that any owner of the Property may hereafter at any time elect to place on the Property, and to all advances already made or that may be hereafter made on account of any such mortgage, to the full extent of the principal sums secured thereby and interest thereon. Further, Lessee shall on request hereafter execute any paper or papers that Lessor's counsel may deem necessary to accomplish such subordination of

Lessee's interests in this Lease, in default of which Lessor is hereby appointed as Lessee's attorney-in-fact.

31. **CONTINGENCIES.** This Lease shall be contingent upon Lessee obtaining all necessary State and County approvals. Notwithstanding this contingency, Lessee shall be obligated to pay all rent due hereunder while seeking all necessary approvals. In the event Lessee is unable to obtain the necessary approvals to operate the uses permitted hereunder, Lessee shall have the option of declaring this Lease null and void; any and all rents paid to Lessor prior thereto shall be deemed nonrefundable and shall not be prorated. Lessor agrees to execute and deliver any consents, documents or other assurances necessary to acquire the necessary, permits, approvals, etc., required to for the purposes intended by this Agreement.

32. **ROADS.** All roads providing access to the Property, excepting those roads that only provide access to retained lands, shall be maintained by Lessee at Lessee's sole cost and expense. Lessor makes no representation that the said roads are suitable for Lessee's intended use. Lessee may only establish new roads with Lessor's prior written consent which shall not be unreasonably withheld.

33. **TIMBER:** Lessee shall not clearcut any timber on the Property without Lessor's prior written consent. Any tree or vegetation removal shall be selective and shall result in the minimum amount of removal necessary. Examples of permitted cutting would be to eliminate limited tree or vegetation

interference with the operation of center pivot spray irrigation equipment or to install lines for irrigation within existing and maintained forested areas.

34. **CHEMICALS.** Lessee shall provide Lessor with a list, which shall be updated from time to time to maintain its accuracy, of all chemicals in use on the Property and shall maintain and store said chemicals in accordance with all applicable State, Federal and Local requirements.

[The remainder of this page was left blank intentionally.]

IN WITNESS WHEREOF, each party, intending to be legally bound, has caused this Agreement to be executed by the undersigned, each of whom represents and warrants that they are authorized to execute this Agreement as of the date written above.

LESSOR:
Wandendale Farms, Inc.
A Delaware Corporation

By: _____
President

Attest: _____
Secretary

(Seal)

LESSEE:
Tidewater Environmental Services, Inc.
A Delaware Corporation

By: _____
President

Attest: _____
Assistant Secretary

(Seal)

Exhibit "A"

Leased Property

All those certain tracts, pieces or parcels of land lying and being in Indian River Hundred, Sussex County, Delaware, identified on the Tax Maps of the Sussex County Department of Finance, as follows:

1 Tax District 234, Map 11.00, Parcel 50.00 (153.88 acres)

2. Tax District 234, Map 7.00, Parcel 130.00 (96.67 acres)

3. Tax District 234, Map 11.00, Parcel 48.00 (48.53 acres)

4. Tax District 234, Map 7.00, Parcel 127.00 (30.50 acres)

5. Tax District 234, Map, 6.00, Parcel 82.00 (15.50 acres)

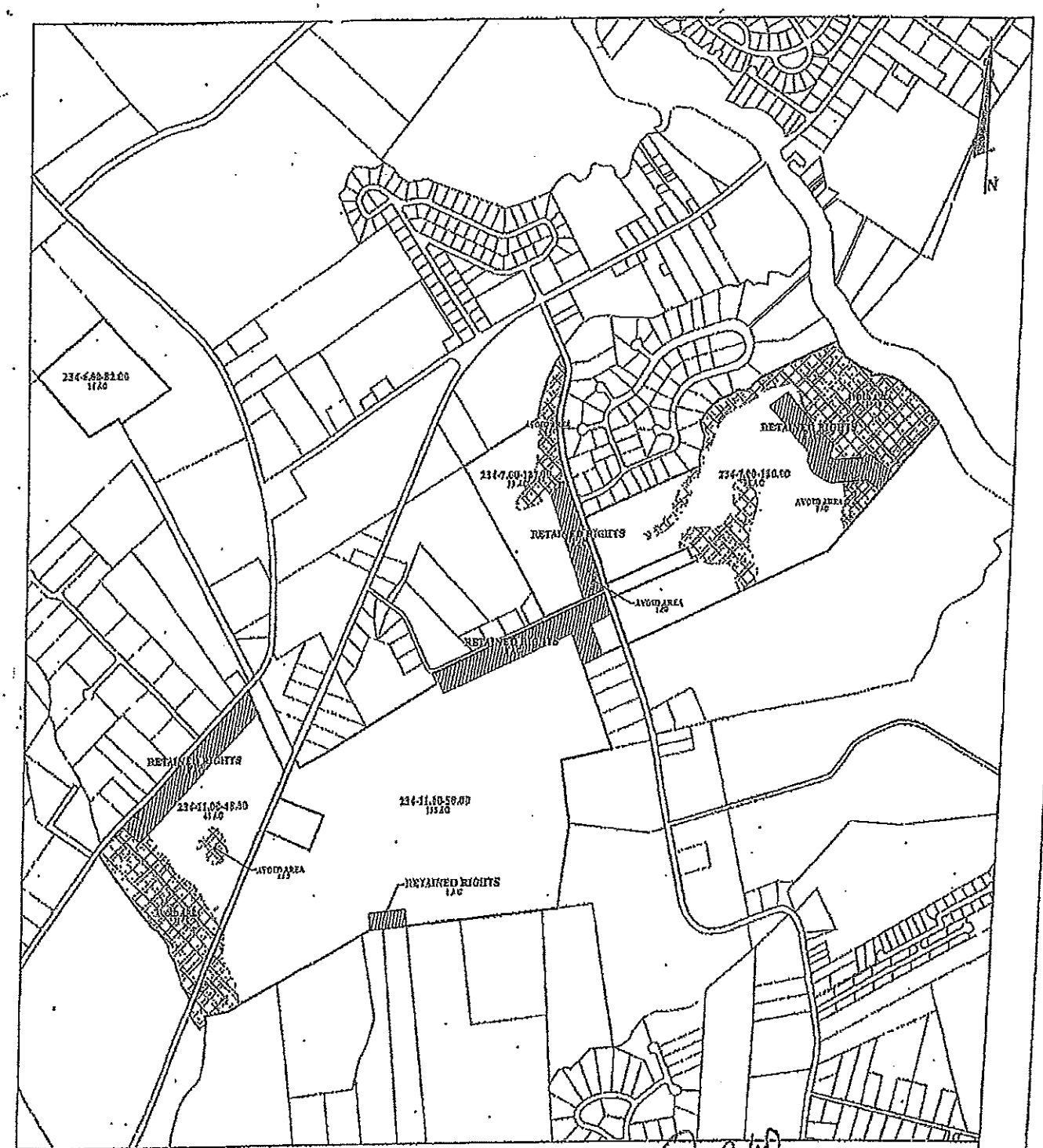

Note:
The Landbase information shown hereon has been compiled from available data from the State Of Delaware, Sussex County, and field work performed by Atlantic Resource Management, Inc. The actual boundaries of features can only be determined by an appropriate survey

LEGEND

RETAINED AREAS

AVOID AREAS

MARSH PROPERTIES

TIDEWATER
ENVIRONMENTAL SERVICES, INC.
1100 SOUTH LITTLE CREEK ROAD
DOVER, DELAWARE 19901

EXHIBIT "B"

BASIS OF FLOW

CHAPTER III

III. DESIGN BASIS

This is a new facility with no existing data. It is anticipated that 100% of flow to the facility will be residential and commercial domestic wastewater. Design influent and effluent data are shown on Exhibit III-1. Although these data are shown for the Phase 12 treatment facility, influent and effluent parameters, with the exception of average and peak flow, are assumed to be applicable in Phases 2 through 12.

EXHIBITS

INFLUENT CHARACTERISTICS

PARAMETER	INFLUENT	EFFLUENT
Flow	1.45 MGD	-
Peak Flow[1]	4028 GPM	-
Phosphorus	8 mg/l	≤0.5 mg/l
BOD_5	350 mg/l	≤5 mg/l
TKN	55 mg/l	≤1.5 mg/l
NH_3	39 mg/l	≤0.5 mg/l
Total N	55 mg/l	≤5 mg/l
TSS	225 mg/l	≤5 mg/l
Temperature	>10° F and <25° C at all times	
Alkalinity	300 mg/l	≤75 mg/l

[1] Based on an assumed peaking factor of 4.0

EXHIBIT III-1

RAW WASTE LIFT STATION

CHAPTER IV

IV. RAW WASTE LIFT STATION

Phase 1

No raw waste lift station is required

Phase 2 and 3

It is anticipated that submersible pumps will be installed in manhole MH-1 to pump raw waste to the package plants installed during these phases. An interim force main will be constructed to feed the screening equipment and flow equalization tanks integrated with package plants.

Phase 4 thru 12

Beginning in Phase 4, TESI will construct a raw waste pumping station to replace the interim pumping station installed for Phases 2 and 3. Three (3) submersible pumps transmit raw waste to screens located in the headworks building. Each raw waste pump is piped directly to a dedicated screen. The design includes provisions for installation of a future fourth pump. Influent flow is measured by a flow meter on each raw waste line.

The lift station also includes a comminutor designed to grind or macerate large solids, rags, or other trash which could damage downstream unit processes.

The basis of design for the raw waste pumps and comminutor are provided as Exhibit IV-1. Equipment cut sheets are provided in Attachment A.

EXHIBITS

BASIS OF DESIGN

RAW WASTE PUMPS

Quantity	3 (2 operating, 1 spare)
Type	Submersible Centrifugal
Design Point	2100 GPM @26.3 TDH
Electrical	25 HP, 460 V, 3 Phase, 60 Hz

COMMINUTOR

Quantity	1
Type	Immersible Grinder
Capacity	4,000 GPM @ 17" Headloss
Electrical	5 HP, 460 V, 3 Phase, 60 Hz

EXHIBIT IV-1

HEADWORKS

CHAPTER V

V. HEADWORKS

Phase 1

No screening required.

Phases 2 and 3

Preliminary treatment will consist of screening equipment integral with the package plants used during these phases.

Phases 4 through 12

Starting in Phase 4, a stand alone headworks building will be constructed. Initially the building will house three (3) screens and screening compactor units.

These screens are self-cleaning, internally fed rotary drum screens with trunnion wheel design. A water spray system automatically cleans the screening surface. The screens utilize a wedgewire mesh installed over a sturdy support structure with an opening size of 0.040 inches. The screens will trap hair, grit and fine stringy materials, thereby eliminating the need for a separate grit removal system.

Screened wastewater flows to the flow equalization basin. The screenings will be diverted into screenings compactors. Each compactor presses and dewaters screenings then directs screenings outside the building to a dumpster. The basis of design for the new screening and compacting equipment is shown on Exhibit V-1. Cut sheets are provided in Attachment A.

EXHIBITS

DESIGN BASIS - HEADWORKS

ROTARY SCREEN

Quantity	3 (2 operating, 1 standby)
Type	Wedgewire
Mesh Size	0.040 inches
Capacity	2100 GPM
Electrical	3 HP, 460 V, 3 Phase, 60 HZ

COMPACTOR

Quantity	3 (2 operating, 1 standby)
Capacity	35-40 ft^3/hr
Electrical	2 HP, 460 V, 3 Phase, 60HZ

EXHIBIT V-1

FEED FORWARD PUMPS

CHAPTER VI

VI. FLOW EQUALIZATION

Phase 1

No flow equalization required

Phase 2 and 3

Flow equalization will be integrated with the package plants being used in these phases

Phases 4 thru 12

Dedicated flow equalization will be constructed starting in Phase 4. The flow equalization basins main purpose is to dampen peak flows and equalize loadings to the downstream process units. The tank is aerated, primarily for odor control, using coarse bubble diffusers and positive displacement blowers.

Approximately one-third of the full basin volume (Basin A) will be constructed initially, with the remaining volume (Basin B) constructed as required by actual flow increases. It is estimated that additional equalization volume will be required during Phase 6. At this time, constructed equalization volume will be approximately 25% of average daily flow. TESI may elect to adjust the volume of Basin B based on historical operating data. Two (2) stop gates between the basins allow the smaller basin to be isolated in the event that equalization volume needs to be reduced during later phases or for seasonal variations in average flow.

Two (2) blowers will be installed to provide air for Basin A. One of these blowers will be removed when Basin B is constructed and two (2) new blowers will be installed to provide air to both basins. One (1) of the original blowers will remain to provide air for only Basin

A in the event of seasonal operation as described above.

Submersible pumps are used to pump screened wastewater from the flow equalization basin to the treatment tanks (feed forward). Initially three (3) pumps will be installed with space dedicated for a future pump. Pumps will be controlled using a variable frequency drive and adjusted based on feed forward flow rates measured at flow meters dedicated to each feed forward pump.

The basis of design for the flow equalization basin, aeration system and feed forward pumps, are shown in Exhibit VI-1. Cut sheets are provided in Attachment A.

EXHIBITS

DESIGN BASIS - FLOW EQUALIZATION

FEED FORWARD PUMPS

Pumps	3 (2 operating, 1 standby)
Type	Submersible Centrifugal
Design Point	504 GPM @ 25.3 Ft. TDH
Electrical	5 HP, 460 V, 3 Phase, 60 Hz

FLOW EQUALIZATION BASIN

Volumes	
Basin A	148,000 Gallons
Basin B	278,000 Gallons
Total	426,000 Gallons
Air Required	1.2 CFM/1,000 Gallons

BLOWERS

Blowers	
Quantity	2 (1 operating, 1 standby)
Type	Positive Displacement
Design Point	
Basin A	180 CFM @ 10.3 psi
Basin B	432 CFM @ 10.3 psi
Electrical	
Basin A	15 HP/460 V/3 Phase/60 Hz
Basin B	40 HP/460 V/3 Phase/60 Hz

EXHIBIT VI-1

MEMBRANE BIOREACTOR

CHAPTER VII

VII. MEMBRANE BIOREACTOR

TESI has selected a Membrane Bioreactor (MBR) Treatment process for this facility. The MBR process is an activated sludge treatment processes which uses membranes for solids separation and tertiary treatment in a single unit process in lieu of a more traditional clarifier and filter. In addition the process design for this facility includes anoxic tanks before and after the aeration tank which provides for biological nutrient removal (BNR) capabilities. Treatment capacity will be installed in phases as described below.

Phase 1

No treatment facilities are required

Phases 2 and 3

The package plants constructed during these phases include all tankage, equipment and piping required for theses phases.

Phases 4 thru 12

Starting in Phase 4 TESI will begin construction of a modular MBR treatment tanks with an initial capacity of 300,000 GPD and designed to expanded in 150,000 GPD increments. A total of two (2) treatment tanks will be constructed. Each treatment tank is divided into (3) treatment trains which include the following: a pre-anoxic zone, aeration zone, post-anoxic zone and membrane zone. Process design calculations for a single treatment tank are provided in Exhibit VII-1

Feed forward from the flow equalization tank is directed into a influent trough at the head of each treatment tank. Flow from the trough into the pre-anoxic zone is controlled by

adjustable weir gates that allow flow to be split evenly to the three (3) treatment trains within each tank. A submersible mixer is located within the pre-anoxic zones to provide a complete mix tank without introduction of air. A spare mixer will be available on site.

Wastewater then spills into the aeration tank by gravity. Aeration is provided thru the use of fine bubble tubular membranes installed on the bottom of the tank. Air is provided by positive displacement blowers located in the UV building. Each treatment train has a dedicated operating blower, with a single standby unit available. Blowers are controlled by variable speed drives to match air requirements as dictated by plant loading. A dissolved oxygen (DO) probe will be installed to continuously measure aeration tank DO concentrations. In addition a submersible mixer is provided in each aeration tank. The mixer provides supplemental mixing in the event aeration levels are reduced below that which would provide complete mix conditions within the tank.

Wastewater spills from the aeration zone into a post-anoxic zone. A submersible mixer is located within the post-anoxic zone to provide a complete mix tank without introduction of air. A spare mixer will be available on site.

Wastewater spills from the post-anoxic zone into the membrane zone. The capacity of each treatment train is limited by the membrane surface area installed in the membrane zone. TESI has selected a submerged flat plate membrane configuration in which 400 membrane plates are combined into a "cassette". Each cassette has a capacity, commonly referred to as flux, of 83,616 gallons per day at the manufacturer's design flux rate. Therefore two (2) cassettes are required to be installed to increase plant capacity 150,000 GPD. Actual operating flux rates are controlled by the permeate pumps which are described below.

Based on the foregoing discussion, it is anticipated that the treatment train and membrane cassettes will be installed in a modular stepwise fashion as shown on Exhibit VII-2. At the conclusion of Phase 12, sufficient tankage and cassettes will be installed such that TESI can

opt to install spare cassettes within each treatment train. During Phases 4 thru 11 it is anticipated that spare cassettes would be available on site and can be installed within eight (8) hours of a cassette failure.

Coarse bubble diffusers are an integral part of each membrane cassette. These diffusers provide scour air which rises thru the membrane plates and scrub accumulated solids from the membrane surface. Scour air provides an ongoing cleaning mechanism so that flux rates can be maintained. Scour air is provided by positive displacement blowers located in the UV building. A blower is dedicated to each treatment train with a standby unit available.

Flow from the membrane zone includes permeate, recycle activated sludge (RAS) and waste activated sludge (WAS). A permeate building is located on the end of each treatment tank. The permeate building houses four (4) permeate pumps and a permeate piping manifold which combines permeate flow from up to 16 cassettes within each treatment tank into a single permeate pump suction header and discharge header. Initially two (2) permeate pumps will be needed with additional ones installed as treatment trains and membrane cassettes are added. Permeate pumps are controlled by variable speed drives which are adjusted by permeate flow measured using flow meters dedicated to each permeate pump. Permeate is transmitted to the UV building for disinfection.

Recycle Activated Sludge (RAS) and Waste Activated Sludge (WAS) flow from each treatment train membrane zone by gravity via an adjustable telescoping valve into a RAS/WAS lift station. The lift station contains two (2) submersible RAS pumps which pump deliver RAS back to the influent trough where it is mixed with the screened wastewater being pumped from the flow equalization tank. A single submersible WAS pump transmit waste sludge to the digester.

The membrane cassettes require periodic cleaning with dilute Sodium Hypochlorite and/or Oxalic Acid. The UV building houses large tanks which are used to prepare the dilute

chemical solutions, which are then delivered to the membrane cassettes via gravity. An alum tank is also located in the UV building. Chemical feed pumps deliver alum via chemical feed lines to the aeration tank, to provide phosphorus removal.

The membrane bioreactor and all remaining treatment plant unit processes will be controlled via a SCADA system supplied by the membrane bioreactor manufacturer.

The membrane bioreactor design features are included on Exhibit VII-1. Equipment cut sheets are provided in Attachment A.

EXHIBITS

MEMBRANE BIOREACTOR PROCESS DESIGN

Enviroquip
a division of Eimco Water Technologies

SECTION 1: MBR HYDRAULIC DESIGN

Part 1: Membrane Specification

1. The hydraulic capacity of an MBR plant is a function of temperature and the number of membrane cartridges. At the minimum design temperature, the estimated membrane flux will be:

1.1.1.1	Minimum Operating Temperature, T_{MIN}	=	12	°C
1.1.1.2	Suggested Membrane Flux, F_C	=	13.3	gal/ft^2*day

2. Once the design flux is determined, the required number of membrane cartridges can be calculated as follows:

1.1.2.1	Design Flow, Q_D	=	1,000,000	gal/day
1.1.2.2	Membrane Area Per Cartridge, A_C	=	15.6	ft^2
1.1.2.3	Required Number of Membrane Cartridges, $Cart_{REQ}$		$(1/F_C)*(Q_D)*(1/A_C)$	
			4,832	cartridges
1.1.2.4	Selected Number of Membrane Units, #Units		12	RW
1.1.2.5	Actual Number of Cartridges, $Cart_{ACT}$		4,800	cartridges
1.1.2.6	**Actual Membrane Flux, F_C**		**13.4**	**gal/ft^2*day**

EXHIBIT VII-1

Enviroquip
a division of Elmco Water Technologies

SECTION 2: TANK SIZING CALCULATIONS

Part 1: Aeration Tank (MBR)

1. Initially, the volume of an MBR is calculated based on the number and type of membrane units used to provide the design hydraulic capacity (see Section 1, Part 1):

2.1.1.1	Recommended SWD, H_{MBR}	=	16	ft
2.1.1.2	Minimum MBR Tank Width, W_{MBR}	=	14	ft
2.1.1.3	Distance Between Membrane Unit Centerlines, L_{CL}	=	3.33	ft
2.1.1.4	Distance from End Membrane Unit to Tank Wall, L_{WALL}	=	2.50	ft
2.1.1.5	Number of MBR Tanks, #Tanks	=	3	tanks
2.1.1.6	Number of Units Per Basin, #Units	=	4	units
2.1.1.7	Minimum MBR Tank Length, L_{MBR}	=	$[L_{CL} * (\#\text{Units per basin} - 1)] + 2 * L_{WALL}$	
		=	15.0	ft

2.1.1.8	Minimum MBR Tank Volume, $V_{MBR,TANK}$	=	$L_{MBR} * H_{MBR} * W_{MBR} * (7.48\ gal/ft^3)$	
		=	25,116	gal
2.1.1.9	Total MBR Volume, $V_{MBR,T}$	=	$\#Tanks * V_{MBR,TANK}$	
		=	75,348	gal
2.1.1.10	Volume Displaced by Each Cartridge, $V_{DISP,CART}$	=	1.53	gal/cartridge
2.1.1.11	Total Volume Displaced by Membranes, V_{DISP}	=	$V_{DISP,CART} * Cart_{ACT}$	
		=	6,336	gal
2.1.1.12	Volume Available for Nitrification, $V_{AVAIL,MBR}$	=	$V_{MBR,T} - V_{DISP}$	
		=	69,012	gal

2. The MBR can be operated at total sludge ages (nitrification and denitrification) from 10 days and up. The nitrates produced in the MBR Basin are sent back to the Anoxic Tank for denitrification. The net nitrogen load based on plant design parameters is:

2.1.2.1	Influent BOD Concentration, C_{BOD0}	=	350	mg/l
2.1.2.2	Influent BOD Load, N_{BOD0}	=	C_{BOD0} * [8.34 (lb/MGD)/(mg/l)] * (Q_D/10°)	
		=	2,919.0	lb BOD / day
2.1.2.3	Effluent BOD Concentration, C_{BOD1}	=	5	mg/l
2.1.2.4	Effluent BOD Load, N_{BOD1}	=	C_{BOD1} * [8.34 (lb/MGD)/(mg/l)] * (Q_D/10°)	
		=	41.7	lb BOD / day
2.1.2.5	Influent Nitrogen (TKN) Concentration, C_{N0}	=	55	mg/l
2.1.2.6	Influent Nitrogen (TKN) Load, N_{N0}	=	C_{N0} * [8.34 (lb/MGD)/(mg/l)] * (Q_D/10° gal/MG)	
		=	458.7	lb N / day
2.1.2.7	Yield, Y	=	0.55	lb TSS / lb BOD
2.1.2.8	Nitrogen Concentration in Waste Sludge, C_{NWAS}	=	6.0%	lb N / lb SS
2.1.2.9	Waste Sludge Nitrogen Load, N_{NWS}	=	N_{BOD0} * Y * C_{NWAS}	
		=	96.3	lb N / day

2.1.2.10	Effluent TKN Limit, $N_{eff\ TKN}$	=	12.5	lb N / day
2.1.2.11	Net Nitrification Load, N_{NNET}	=	$N_{N0} - N_{NWS} - N_{eff\ TKN}$	
		=	349.9	lb N / day
2.1.2.12	Total Nitrogen Load, (TN) N_{TN}	=	458.7	lb N / day
2.1.2.13	Design Effluent Nitrate Concentration Based on Full Denitrification, $C_{NO3,1}$	=	1.5	mg/l
2.1.2.14	Design Effluent Nitrate Loading Based on Full Denitrification, $N_{NO3,1}$	=	$C_{NO3,1}$ * [8.34 (lb/mgd)/(mg/l)] * ($Q_D/10^6$ gal/MG)	
		=	12.5	lb N / day
2.1.2.15	Net Denitrification load, Design NO3-Nitrogen to be denitrified, N_{DNET}	=	$N_{TN} - N_{NO3,1} - N_{effTKN} - N_{NWS}$	
		=	337.4	lb N / day
2.1.2.16	Calculated Effluent Nitrate Load, $N_{N1,CALC}$	=	$N_{NNET} - N_{DNET}$	
		=	12.5	lb N / day
2.1.2.17	Calculated Effluent Nitrate Concentration $C_{N1,CALC}$	=	$N_{N1,CALC}$ / [8.34 (lb/MGD)/(mg/l)] * ($Q_D/10^6$ gal/MG)	
		=	1.5	mg/l
2.1.2.18	**Confirm 2.1.2.17 <= 2.1.2.13**	=	**OK**	

3. Because the rate at which TKN is consumed is slow relative to the consumption of BOD, the required aeration process volume is given by:

2.1.3.1	Selected Concentration of Suspended Solids in MBR, SS_{MBR}	=	12,500	mg / l
		=	0.10	lb TSS / gal
2.1.3.2	Maximum Concentration of Suspended Solids in MBR, $SS_{MBR,MAX}$	=	18,000	mg / l
		=	0.15	lb TSS / gal
2.1.3.3	Minimum Aerobic SRT @ Min SRT_{Min}	=	7.693	days
2.1.3.4	Safety Factor, SF	=	50.0%	
2.1.3.5	Minimum Volume Required for Nitrification, $V_{N,MIN}$	=	$N_{NNET} * (1/r_{NIT}) * (1/SS_{MBR}) * (1 + SF)$	
		=	207,667	gal

Part 2: Anoxic Tank (Pre and Post Denitrification tanks)

Required Denitrification volume for stabilization (20% of MBR volume + Pre-air volume) if Denitrification is not needed	=	128,704	gal

Pre Anoxic Denitrification calculations

1. The concentration of suspended solids in the Anoxic Tank is a function of the recycle rate and the MLSS concentration in the MBR. The recycle rate is calculated by:

2.2.1.1	Net Nitrogen Concentration, C_{NNET}	=	N_{NNET} * (1 mg/l / 8.34 lb/MGD) * ($10^6/Q_D$)	
		=	42.0	mg/l
2.2.1.2	RAS Recycle Rate, RR_{CALC}	=	$(C_{NNET} - C_{NO3,1})/ C_{NO3,1}$	
		=	27.0	
2.2.1.3	Design RAS Recycle Rate, RR_{DESIGN}	=	6	(from MBR to Anoxic)

2. The required volume of the Anoxic Tank is determined by the minimum rate at which denitrification occurs, the concentration of heterotrophic organisms, and the nitrate load:

2.2.2.1	Pre-Anoxic MLSS based Recycle Rate, $SS_{PRE\text{-}ANOX}$ (=SS_{PA})	=	10,714	mg/L
2.2.2.2	Min Pre-Anoxic volume selected $V_{PRE\text{-}ANOX}$	=	120,000	gal

2.2.2.3	Pre Anoxic Specific Denitrification rate, $SDNR_{20}$	=	$0.03*(F:M_{Anoxic}) + 0.029$	
	Food to Microorganism ratio in the Pre-Anoxic basin $F:M_{anoxic}$	=	(Inf BOD-Eff BOD/(Anoxic volume * Anoxic MLVSS)	
		=	0.39	1 / day
	$SDNR_{20}$	=	0.041	lb NO_3/lb VSS*day
	Correction for Design Temperature			
	Specific Denitrificatin rate, $SDNR_T$	=	$SDNR_{20}*\Theta^{(T-20)}$	
	Denitrification-Temperature Activity Coeff., Θ	=	1.026	Unitless
		=	0.033	lb NO_3/lb VSS*day
	VSS content	=	0.70	
2.2.2.4	Nitrate removed in Pre-Anoxic tank	=	($SDNR_T$ * $SS_{PRE-ANOX}$ * $V_{PRE-ANOX}$ * VSS content * 8.34 /10^6)	
		=	249	lb/day
	Post - Anoxic Denitrification calculations			
2.2.2.5	Post-Anoxic MLSS $SS_{POST-ANOX}$ (=SS_{MBR})	=	12,500	mg/L
2.2.2.6	Min Post Anoxic volume selected $V_{POST-ANOX}$	=	114,000	gal
2.2.2.7	$SDNR_{POST-ANOX}$	=	$0.025 * \Theta^{(T-20)}$	
	Post Denitrification Temp. coefficient, Θ	=	1.08	Unitless
		=	0.014	lb NO_3/lb VSS*day
2.2.2.8	Nitrate removed in Post-Anoxic tank	=	($SDNR_{POST-ANOXIC}$ * $SS_{POST-ANOX}$ * $V_{POST-ANOX}$ * VSS content * 8.34 /10^6)	
		=	112	lb/day
2.2.2.9	Total Nirate removed	=	361	lb/day
2.2.2.10	**Confirm 2.2.2.9 => 2.1.2.15**	=	**OK**	

Enviroquip
a division of Eimco Water Technologies

Part 3: Pre-Aeration Tank (PA)

1. If the minimum nitrification volume exceeds the MBR volume (see Section 2, Part 1) then a Pre-Aeration Tank is required to meet effluent nitrogen limits:

2.3.1.1	Pre-Aeration Tank Volume, $V_{PA,NIT}$ (Corrected for Anoxic MLSS)	=	$(V_{NMIN} - V_{AVAIL,MBR}) * SS_{MBR}/SS_{ANOX}$
		=	161,764 gal
			(Volume of Pre-Aeration Required)

2. Sufficient aerated basin volume is needed to provide enough biomass to maintain a reasonable food to mass (F:M) ratio for the process (0.1 to 0.2). The volume of the pre-aeration basin can be calculated as follows:

2.3.2.1	F:M Ratio Assumed to Calculate Pre-Air Volume, $F:M_{ASSD}$	=	0.08
2.3.2.2	Safety Factor (S.F)	=	50%
2.3.2.3	Pre-Aeration Tank Volume, $V_{PA,F:M}$	=	$[(N_{BOD0} / F:M_{ASSD}) - (V_{AVAIL,MBR} * SS_{MBR})]* (1+S.F)/ SS_{ANOX}$
		=	492,759 gal
			(Pre-aeration volume required)
2.3.2.4	Selected Volume for Pre-Aeration, V_{PA}	=	360,000 gal

Part 4: Pre-Anaerobic Tank (PAN for Bio-P)

2.4.1.1	Recommended Volume for $V_{PAN,CALC}$	= 0	gallons	Based on 1 Hour HRT
2.4.1.2	Recommended Recycle Rate	= 0.0		From Pre-Aeration Basin
2.4.1.3	Selected Volume, V_{PAN}	= 0	gallons	
2.4.1.4	Operating MLSS in SS_{PAN}	= 0	mg/L	Based on Recycle Rate
		= 0.00	lb TSS / gal	

SECTION 3: PLANT F:M, HRT, & SRT

Part 1: F:M Ratio

1. The F:M ratio can be calculated as follows:

3.1.1.1 Plant Food to Mass Ratio, F:M

$$= (N_{BOD0} - N_{BOD1}) * [1/(SS_{MBR} * V_{AVAIL,MBR} + SS_{POST\text{-}ANOX} * V_{POST\text{-}ANOX} + SS_{PA} * V_{PA} + SS_{PRE\text{-}ANOX} * V_{PRE\text{-}ANOX} + V_{PAN} * SS_{PAN})]$$

$$= 0.05 \quad 1/day$$

2. HRT is an estimate of the average time liquid stays in a given volume. For the MBR and Anoxic Tank, the design HRT is:

3.1.2.1 MBR Hydraulic Residence Time, θ_{MBR}

$$= V_{AVAIL,MBR} * (1/Q_D) * (24\ hr/day)$$

$$= 1.7 \quad hr$$

3.1.2.2 Anoxic Tank Hydraulic Residence Time, θ_{ANOX} (Includes Pre and Post Anoxic if applicable)

$$= V_{ANOX} * (1/Q_D) * (24\ hr/day)$$

$$= 5.6 \quad hr$$

3.1.2.3 Pre-Aeration Tank Hydraulic Residence Time, θ_{PA}

$$= V_{PA} * (1/Q_D) * (24\ hr/day)$$

$$= 8.6 \quad hr$$

3.1.2.4 Pre-Anaerobic Tank Hydraulic Residence Time, θ_{PAN}

$$= V_{PAN} * (1/Q_D) * (24\ hr/day)$$

$$= 0.0 \quad hr$$

3.1.2.5 Total Hydraulic Residence Time, θ_T

$$= \theta_{MBR} + \theta_{ANOX} + \theta_{PA} + \theta_{PAN}$$

$$= 15.9 \quad hr$$

3. Similar to HRT in concept, SRT is an estimate of the average time solids spend in a given volume and is calculated as follows:

3.1.3.1	Wasting Rate of Activated Sludge, N_{WAS}	=	$Y * (C_{BOD0} - C_{BOD1}) * 8.34 * (Q_D/10^6)$	
		=	1,583	lb TSS / day
3.1.3.2	Total Mass of Suspended Solids, M_{SS}	=	$(V_{AVAIL,MBR} * SS_{MBR}) + (V_{POST\text{-}ANOX} * SS_{POST\text{-}ANOX}) + (V_{PA} * SS_{PA}) + (V_{PRE\text{-}ANOX} * SS_{PRE\text{-}ANOX}) + (V_{PAN} * SS_{PAN})$	
		=	61,923	lb TSS
3.1.3.3	Total Solids Residence Time, θ_C	=	M_{SS} / N_{WAS}	
		=	39	days

SECTION 4: M&E Nitrification Design Criteria- Cross Check

Part 1: Nitrification check

1 Nitrification SRT check

4.1.1.1	$1/SRT_{Nmin}$	=	$[(\mu_{Nmax} * N) / (K_N + N)] - K_{dN}$	
	Design Temperature	=	12	°C
	Nitrification Max. Specific growth rate, μ_{Nmax}			
	Range	=	0.20-0.90	g VSS/ g VSS.d
	Typical value at 20 °C	=	0.75	g VSS/ g VSS.d
	Temperature Activity Coeff. for μ_{Nmax}, Θ	=	1.07	Unitless
	Correction for Design Temperature	=	$0.75 * (\Theta)^{\wedge(T-20)}$	
	μ_{Nmax}	=	0.44	g VSS/ g VSS.d
	Nitrification Half velocity constant, K_N			
	Range	=	0.50-1.00	mg NH_4-N/L
	Typical value at 20 °C	=	0.74	mg NH_4-N/L
	Temperature Activity Coeff. For K_N, Θ	=	1.053	Unitless

	Correction for Design Temperature	=	$0.74 * (\Theta)^{\wedge(T-20)}$	
	K_N	=	0.49	mg NH_4-N/L
	Nitrification Endogenous decay coefficient K_{dN}			
	Range	=	0.05-0.15	g VSS/ g VSS.d
	Typical value at 20 °C	=	0.08	g VSS/ g VSS.d
	Temperature Activity Coeff. For K_{dN}, Θ	=	1.04	Unitless
	Correction for Design Temperature	=	$0.08 * (\Theta)^{\wedge(T-20)}$	
	K_{dN}	=	0.06	g VSS/ g VSS.d
	Effluent N concentration, N	=	0.5	mg / L
	Minimum SRT needed for Nitrification, SRT_{Nmin}	=	6.2	days
4.1.1.2	Safety Factor, SF Same as peaking factor, PDF/MMF	=	2	Unitless
4.1.1.3	M&E recommended SRT	=	Min SRT * SF	
		=	12.3	days
4.1.1.4	Enviroquip calculated Aerobic SRT for nitrification	=	(Aerobic volume* MLSS)/ ((Inf. BOD - Eff. BOD) * Y)	
		=	24.8	days
4.1.1.5	**Enviroquip calculated Aerobic SRT for should be higher than M&E recommended SRT**	=	**OK**	

SECTION 5: AERATION REQUIREMENTS

Part 1: Actual Oxygen Requirements

1. Carbonaceous biochemical oxygen demand (CBOD) is a measure of the oxygen consumed during assimilation of waste carbon entering the MBR. The actual CBOD load is:

5.1.1.1	Unit BOD Oxygen Demand, O_{2UBOD}	=	0.5	lb O_2 / lb BOD
5.1.1.2	Total BOD Oxygen Demand, O_{2TBOD}	=	$O_{2UBOD} * (N_{BOD0} - N_{BOD1})$	
		=	1,439	lb O_2 / day

2. Nitrifying organisms are able to utilize reduced ammonia in place of CBOD as an electron donor in cell synthesis. The oxygen demand exerted during this process is referred to as nitrogenous biochemical oxygen demand (NBOD) and can be calculated by:

5.1.2.1	Unit Nitrogen Oxygen Demand, O_{2UNIT}	=	4.57	lb O_2 / lb N
5.1.2.2	Total Nitrogen Oxygen Demand, O_{2TNIT}	=	$O_{2UNIT} * N_{NNET}$	
		=	1,599	lb O_2 / day

3. Microorganisms will consume other microorganisms in a process called endogenous decay. The oxygen demand exerted by endogenous decay is:

5.1.3.1	Endogenous Oxygen Unit Requirement, c	=	0.06	lb O_2 / lb VSS*day
5.1.3.2	Volatile Fraction of Suspended Solids, SS/VSS	=	0.70	
5.1.3.3	Mass of Volatile Solids In MBR & PA, $m_{MBR\&PA}$	=	$(V_{AVAIL,MBR} * SS_{MBR} + V_{PA} * SS_{PA}) * SS/VSS$	
		=	27,538	lb VSS
5.1.3.4	Total Endogenous Oxygen Demand, O_{2END}	=	$m_{MBR\&PA} * c$	
		=	1,780	lb O_2 / day

4. During denitrification a certain amount of BOD is consumed. Therefore, we can take a denitrification credit when calculating the oxygen demand. The denitrification credit can be calculated as follows:

5.1.4.1	Unit BOD Consumed During Denitrification, BOD_{UNIT}	=	2.86	lb BOD / lb N
5.1.4.2	Total Denitrification Credit, $O_{2CREDIT}$	=	$DN_N * BOD_{UNIT} * O_{2UBOD}$	
		=	482	lb O_2 / day

5. The oxygen demand of the process is the sum total of the demands calculated in the previous three steps and represents the actual oxygen requirement (AOR) of the plant. The AOR is:

5.1.5.1	**Total Oxygen Demand, AOR**	=	$O_{2TBOD} + O_{2TNIT} + O_{2END} - O_{2CREDIT}$	
		=	**4,335**	**lb O_2 / day**

Part 2: Coarse Bubble Air

1. The membrane units are supplied with integral coarse bubble diffusers (4 mm). The air supplied by the diffuser is used to provide membrane scouring, mixing, and process oxygen. The minimum air required for cleaning is:

5.2.1.1	Cleaning Air Required Per Cartridge, Air_{CART}	=	0.221	SCFM
5.2.1.2	Total Cleaning Air Required, Air_{CLEAN}	=	$Air_{CART} * Cart_{ACT}$	
		=	1,063	SCFM
5.2.1.3	Actual Cleaning air Provided, Air_{CLEAN}	=	1,063	SCFM

2. The minimum air required for mixing is:

5.2.2.1	Unit Mixing Air, Air_{UMIX}	=	0.015	SCFM / ft3
5.2.2.2	Mixing Air For MBR, Air_{MMBR}	=	VAVAIL,MBR * (1 ft3/7.48 gal) * 0.015 SCFM / ft3	
		=	138	SCFM
			Air_{MMBR} < Cleaning Air Supplied	

3. The amount of usable oxygen provided by the membrane units is a function of several factors, including: site conditions, diffuser depth, residual dissolved oxygen concentration (DO), and thermodynamic/kinetic correction factors, and is given by:

5.2.3.1	Kinetic Correction Factor, α	=	0.70625	
5.2.3.2	Thermodynamic Correction Factor, β	=	0.95	
5.2.3.3	Temperature Correction Factor, θ	=	1.024	
5.2.3.4	Ambient Pressure corrected for elevation(Psite)	=	14.43	
5.2.3.5	Std. Atmospheric pressure (P std)	=	14.7	
5.2.3.6	Pressure Correction Factor (Ω)	=	$(Psite + 0.007*\gamma_{WT}*H_s*0.3 - P_{vT})/(P\ std + 0.007*\gamma_{w20}*H_s*0.3 - P$	
		=	0.98	
	Specifi weight of water at T, γ_{wT}	=	62.25	lb/cu.ft
	Specific weight of water at 20, γ_{w20}	=	62.32	lb/cu.ft
	Vapor Pressure of water T, P_{vT}	=	0.46	lb/sq.ft
	Vapor Pressure of water 20 C, P_{v20}	=	0.34	lb/sq.ft
5.2.3.7	Surface Oxygen Saturation at Standard Temp and Pressure (STP), C_{20s}	=	9.08	mg/l
5.2.3.8	Oxygen Saturation at Temperature (C_T)	=	8.24	mg/l
5.2.3.9	Temperature correction Factor, (ζ)	=	C_T/C_{20}	
		=	0.91	
	Steady state Dissolved oxygen saturation concentration , C_{20}	=	$C_{20s}(P\ std - P_{v20} + 0.007*\gamma_{w20}*H_s*0.3)/(P\ std - P_{v20})$	
		=	10.32	mg/L

5.2.3.10	Residual Oxygen Concentration in MBR, C_R	=	2.0	mg/l
5.2.3.11	Max Design Operating Temp, T	=	25	°C
5.2.3.12	Diffuser Submergence, H_S	=	$(H_{SWD} - 1)$	
		=	15	ft
5.2.3.13	Oxygen Transfer Efficiency per Foot, $SOTE_{FT}$	=	0.5%	per foot submergence
5.2.3.14	Standard Oxygen Transfer Efficiency, SOTE	=	$H_S * SOTE_{FT}$	
		=	7.5%	
5.2.3.15	Density of Air, ρ_{AIR}	=	0.075	lb/ft^3
5.2.3.16	Mass Fraction of Oxygen In Air, C_{O2}	=	0.232	lb O_2 / lb Air
5.2.3.17	Hours of Operation for Cleaning air, x	=	19	hrs/day
5.2.3.18	SOR Provided by MBR Scouring Air (Membrane blowers are ***ON*** for x hrs. and ***OFF*** for 24-x hours during night)	=	$Air_{Clean}*C_{O2}*\rho AIR*SOTE*x$	
		=	1581	lb O_2 / day
5.2.3.19	Actual AOR Provided by MBR Blowers	=	$SOR * [\alpha * ((\beta * \Omega * \zeta * C_{20} - C_R)/C_{20}) * \theta^{T-20}]$	
5.2.3.20	AOR_{AVAIL}	=	814	lb O_2 / day

Part 3: Fine Bubble Air

1. In the event of insufficient nitrification volume or relatively high loadings, supplemental aeration may be required. Any air not supplied in the MBR will be supplied in a fine bubble pre-aeration basin. The aeration requirements for this basin can be calculated as follows:

5.3.1.1	Total Oxygen Demand, AOR	=	4,335	lb O_2 / day

5.3.1.2	Total AOR Provided by MBR Blowers, AOR_{AVAIL}	=	814	lb O_2 / day
5.3.1.3	Air Required in Pre-Aeration Basin, AOR_{PA}	=	$AOR - AOR_{AVAIL}$	
		=	3,521	lb O_2 / day
			(Pre-Aeration required)	
5.3.1.4	Kinetic Correction Factor, α	=	0.61	
5.3.1.5	Thermodynamic Correction Factor, β	=	0.95	
5.3.1.6	Temperature Correction Factor, θ	=	1.02	
5.3.1.7	Ambient Pressure Corrected for Elevation(Psite)	=	14.43	
5.3.1.8	Std. Atmospheric pressure (Pstd)	=	14.70	
5.3.1.9	Pressure Correction Factor (Ω)	=	$(Psite + 0.007*\gamma_{wT}*H_s*0.4 - P_{vT})/(P\ std + 0.007*\gamma_{w20}*H_s*0.4 - P$	
		=	0.98	
	Specifi weight of water at T, γ_{wT}	=	62.25	lb/cu.ft
	Specific weight of water at 20, γ_{w20}	=	62.32	lb/cu.ft
	Vapor Pressure of water T, P_{vT}	=	0.46	lb/sq.ft
	Vapor Pressure of water 20 C, P_{v20}	=	0.34	lb/sq.ft
5.3.1.10	Temperature correction Factor, (ζ)	=	C_T/C_{20}	
		=	0.91	
5.3.1.11	Oxygen Saturation at Temperature (C_T)	=	8.24	
5.3.1.12	Surface Oxygen Saturation at Standard Temp and Pressure (STP), C_{20s}	=	9.08	mg/l

	Steady state Dissolved oxygen saturation concentration , C_{20}	=	$C_{20s}(P\ std - P_{v20} + 0.007*\gamma_{w20}*H_s*0.3)/(P\ std - P_{v20})$	
		=	11.01	mg/L
5.3.1.13	Residual Oxygen Concentration in Pre-Air, C_R	=	2.0	mg/l
5.3.1.14	Max Design Operating Temp, T	=	25	°C
5.3.1.15	Oxygen Transfer Efficiency per Foot , $SOTE_{FT}$	=	2%	
5.3.1.16	SWD in Pre-Air Basin PA_{SWD}	=	18	Ft.
5.3.1.17	Standard Oxygen Transfer Efficiency, SOTE	=	$PA_{SWD} * SOTE_{FT}$	
		=	35%	
5.3.1.18	Air Required in Pre-Aeration Basin, Q_{PA}	=	$AOR_{PA} * 1/[\alpha * ((\beta * \Omega * \zeta * C_{20} - C_R)/C_{20}) * \theta^{T-20}] * (1/\rho_{AIR}) * (1/C_{O2}) * (1/SOTE) * (day/1440\ min)$	
		=	883	SCFM
5.3.1.19	Max. Oxygen Uptake Rate (OUR) Recommended	=	100	mg/L/Hr
5.3.1.20	Actual OUR in Pre-Aeration	=	$AOR_{PA} *454000 / (3.785*24*V_{PA})$	
5.3.1.21	Actual OUR in Pre-Aeration	=	49	mg/L/Hr At Operating Point
5.3.1.22	**Confirm 5.3.1.21 <= 5.3.1.19**	=	**OK**	

SECTION 6: CHEMICAL REQUIREMENTS

Part 1: Sodium Hypochlorite

1. Approximately 17 times per year a maintenance cleaning of the membrane cartridges is required for organic fouling. A 0.25 percent solution of Sodium Hypochlorite is used for this cleaning, and the volume of chemical needed can be calculated by:

6.1.1.1	Actual Number of Cartridges, $Cart_{ACT}$	=	4,800	cartridges
6.1.1.2	Volume of Dilute Chemical Needed per cartridge, V_{CART}	=	1.53	gal dilute / cart
6.1.1.3	Total Volume of Dilute Chemical Needed per Cleaning, $V_{T,DIL}$	=	$Cart_{ACT} * V_{CART}$	
		=	7,344	gal dilute solution
6.1.1.4	Concentration of Dilute NaOCl, $C_{D,NaOCl}$	=	0.25%	
6.1.1.5	Concentration of Stock NaOCl, $C_{S,NaOCl}$	=	12.5%	
6.1.1.6	Dilution Rate, DR_{NaOCl}	=	$C_{S,NaOCl} / C_{D,NaOCl}$	
		=	50	
6.1.1.7	Number of NaOCl Cleanings Per Year, CIP_{NaOCl}	=	17	cleanings / year
6.1.1.8	Total Volume of Stock Chemical Needed per Year, $V_{T,STOCK}$	=	$CIP_{NaOCl} * V_{T,DIL} / DR_{NaOCl}$	
		=	2,497	gal stock NaOCl / year

Part 2: Oxalic Acid

1. In case of inorganic fouling (or scaling), the membrane cartridges may need be cleaned with a 1 percent solution of Oxalic Acid 2 times per year.

6.2.1.1	Actual Number of Cartridges, $Cart_{ACT}$	=	4,800	cartridges
6.2.1.2	Volume of Dilute Chemical Needed per cartridge, V_{CART}	=	1.53	gal dilute / cart

6.2.1.3	Total Volume of Dilute Chemical Needed per Cleaning, $V_{T,DIL}$	=	$Cart_{ACT} * V_{CART}$	
		=	7,344	gal dilute solution
6.2.1.4	Concentration of Dilute Acid, $C_{D,Acid}$	=	1.0%	
6.2.1.5	Concentration of Stock Acid, $C_{S,Acid}$	=	100%	
6.2.1.6	Dilution Rate, DR_{Acid}	=	$C_{S,Acid} / C_{D,Acid}$	
		=	100	
6.2.1.7	Number of Acid Cleanings Per Year, CIP_{Acid}	=	2	cleanings / year
6.2.1.8	Total Volume of Stock Chemical Needed per Year, $V_{T,STOCK}$	=	$CIP_{Acid} * V_{T,DIL} / DR_{Acid}$	
		=	147	gal stock acid / year

Part 3: Chemical addition for Nitrogen Removal

1 Methanol addition for Nitrate Removal

6.3.1.1	BOD:TKN ratio	=	< 6	
6.3.1.2	Methanol addition required	=	NO	
6.3.1.3	Net Denitrification load, Design NO3-Nitrogen to be denitrified, N_{DNET}	=	$N_{TN} - N_{NO3,1} - N_{effTKN} - N_{NWS}$	
		=	337.35	lb N / day
		=	40.45	mg / L
6.3.1.4	Methanol to be added (concentration)	=	$N_{DNET} * 3.5$	
		=	0	mg/ L
6.3.1.5	Methanol to be added 100 % Solution has 792,000 mg/L of Methanol	=	(Methanol concentration * Flow*1000000)/792,000	
		=	0	gal/ day

6.3.1.6 Design Capacity with S.F = 0 gal/ day

Part 4: Chemical addition for Phosphorus removal

	EBPR available	=	NO	
	Phosphorus to be removed, N_{PNET}	=	Influent P- Effluent P-(Influent BOD * Y * C_{PWAS})	
	With EBPR CPWAS @ 4 % P in sludge Without EBPR CPWAS@ 1.5 % P in sludge	=	1.2	mg/ L
		=	10	lb/ day
	1 Ferric Chloride addition			
6.4.1.1	Fe:P Molar ratio, MR	=	0	
6.4.1.2	Ferric Mass Loading	=	(N_{PNET} * MR * 162.21)/30.97	
		=	0	lb/ day
6.4.1.3	Actual Dosage with 32 % solution by weight, FC_{Dosage}	=	0	lb/ day
6.4.1.4	Ferric Volumetric Loading (Solution has specific gravity of 1.4)	=	(FC_{Dosage})/(8.34*1.4)	
		=	0.0	gal/ day
6.4.1.5	Ferric Design storage capacity Peaking factor: 2 Retention days: 30	=	0	gal
6.4.1.6	Sludge Production Ferric Phosphate ($FePO_4$)	=	0	lb/day
6.4.1.7	Sludge Production Ferric Hydroxide ($Fe(OH)_3$)	=	0	lb/day
	2 Alum addition			
6.4.2.1	Al:P Molar ratio, MR	=	1	
6.4.2.2	Alum Mass Loading	=	(N_{PNET} * MR * 666.5)/30.97 * 2	
		=	109	lb/ day

6.4.2.3	Actual dosage with 48 % solution by weight, A_{Dosage}	=	227	lb/day
6.4.2.4	Alum Volumetric Loading (Solution has specific gravity of 1.2)	=	$(A_{Dosage})/(8.34*1.2)$	
		=	23	gal/day
6.4.2.5	Alum Design storage capacity Peaking factor: 2 Retention days: 30	=	1,359	gal
6.4.2.6	Sludge Production Alum Phosphate ($AlPO_4$)	=	40	lb/day
6.4.2.7	Sludge Production Alum Hydroxide ($Al(OH)_3$)	=	13	lb/day

SECTION 7: ALKALINITY BALANCE

Influent Alkalinity	=	300	mg/L
Effluent Alkalinity to be maintained	=	75	mg/L

Part 1: Alkalinity consumed during Nitrogen Removal

1 Nitrification

7.1.1.1	Net Nitrification Load, N_{NNET}	=	349.9	lb N/day
7.1.1.2	Net Nitrification Load, N_{NNET}	=	N_{NNET}/ (Flow * 8.34)	
		=	41.95	mg / L
7.1.1.3	Alkalinity consumed during nitrification (Per mg of Ammonia nitrified)	=	N_{NNET} * 7.14	mg / L
		=	299.5	mg / L

2 Denitrification

7.1.2.1 Net Denitrification load,

	Design NO3-Nitrogen to be denitrified, N_{DNET}	=	337.4	lb N / day
7.1.2.2	Net Denitrification load,	=	N_{DNET}/ (Flow * 8.34)	
	Design NO3-Nitrogen to be denitrified, N_{DNET}	=	40.45	mg / L
7.1.2.3	Alkalinity recovered during denitrification (Per mg of Nitrate denitrified)	=	N_{NDNET} * 3.57	
		=	144.4	mg / L

7.1.2.4	Alkalinity consumed during Nitrogen Removal	=	Alkalinity consumed (nit) - Alkalinity recovered (denit)
		=	155.1 mg / L

Part 2: Alkalinity consumed during Phosphorus removal

1 Alkalinity consumed by Ferric Chloride

7.2.1.1	Fe:P, Theoretical Molar ratio required	=	1
7.2.1.2	Fe:P, Molar ratio used, MR	=	0
7.2.1.3	Fe:P Excess Molar ratio, EMR	=	0.0
7.2.1.4	Excessive chemical added (M.W of Ferric Chloride = 162.21)	=	$(M.W * EMR * N_{PNET})/30.97$
		=	0.00 mg / L
7.2.1.5	Alkalinity consumed by Ferric chloride (Per mg of Excessive Ferric chloride)	=	0.92 mg / L
7.2.1.6	Alkalinity consumed	=	Excessive Chemical added * 0.92
		=	0.0 mg / L

2 Alkalinity consumed by Alum

7.2.2.1	Al:P, Theoretical Molar ratio required	=	1
7.2.2.2	Al:P, Molar ratio used, MR	=	1
7.2.2.3	Al:P Excess Molar ratio, EMR	=	0.0
7.2.2.4	Excessive chemical added (M.W of Ferric Chloride = 666.5)	=	$(M.W * EMR * N_{PNET})/30.97 * 2$
		=	0.0 mg / L

7.2.2.5	Alkalinity consumed by Alum (Per mg of Excessive Alum)	=	0.45	
7.2.2.6	Alkalinity consumed	=	Excessive Chemical added * 0.45	
		=	0.00	mg / L

Part 3: Alkalinity Balance

7.3.1.1	Alkalinity remaining	=	Influent Alkalinity - Alkalinity consumed during N removal - Alkalinity consuemd during P removal	
		=	144.9	mg / L
7.3.1.2	Effluent Alkalinity to be maintaned	=	75	mg / L
7.3.1.3	Alkalinity to be added	=	0	mg / L

Part 4: Chemical addition to recover alkalinity

7.4.1.1	Caustic addition (NaoH) 50 % concentration			
7.4.1.2	Density of 50 % Caustic solution	=	12.76	lb / gal
7.4.1.3	Alkalinity provided by 50 % Caustic solution	=	0.625	lb $CaCo_3$ / lb NaoH
7.4.1.4	Alkalinity to be added	=	0	lb / day
7.4.1.5	Caustic needed	=	(Alkalinity to be added)/ 0.625	
		=	0	lb / day
		=	0	gal / day

PHASED INSTALLATION

	Phase								
	4	5	6	7	8	9	10	11	12
Tank A									
Train 1	4 (1)	3	4	3	4	3	4	3	3
Train 2	(2)	3	4	3	4	3	4	3	3
Train 3	(2)	(2)	(2)	3	4	3	4	3	3
Tank B									
Train 1	(2)	(2)	(2)	(2)	(2)	4	3	4	3
Train 2	(2)	(2)	(2)	(2)	(2)	(2)	(2)	4	3
Train 3	(2)	(2)	(2)	(2)	(2)	(2)	(2)	(2)	3
Total	0	6	8	9	12	13	15	17	18
Required capacity (GPD)	300,000	450,000	600,000	750,000	900,000	1,050,000	1,200,000	1,350,000	1,450,000
Theoretical capacity (GPD)	0	501,696	668,928	752,544	1,003,392	1,087,008	1,254,240	1,421,472	1,505,088

Notes
(1) Number of membrane cassettes in each train during each Phase
(2) Indicates treatment train not contructed during phase

EXHIBIT VII-2

MEMBRANE BIOREACTOR DESIGN FEATURES

Flow[1]	1.0 MGD @ maximum design flux rate, 0.75 MGD as configured for operation
Plant HRT	15.9 Hours
Design Plant SRT	40 Days
F:M Ratio	0.05
MLSS	MBR Zone 12,500 mg/l Aeration Zone 10,000 mg/l
Preanoxic Zone	145,000 gallons
Preanoxic Mixer	
Quantity	3
Electrical	4.7 HP, 460 V, 3 Phase, 60 Hz
Aeration Zone	353,000 gallons
Aeration Zone Mixer	
Quantity	3
Electrical	6.2 HP, 460 V, 60, 3 Phase, 60 Hz
Aeration Zone Air Required	3521 lb/day
Aeration Zone Blower	
Quantity	4 (3 operating, 1 spare)
Design Point	378 cfm @ 9.5 psi
Electrical	25 HP, 460 V, 3 Phase, 60 Hz
Aeration Zone Diffusers	
Quantity	320
Air Flow	0-20 cfm each
Postanoxic Zone	114,000 gallons

[1] Flow for a single treatment tank which is composed of three treatment trains.

EXHIBIT VII-3

Postanoxic Mixer	
Quantity	3
Electrical	4.7 HP, 460 V, 3 Phase, 60 Hz
Membrane Zone	75,000 gallons
Membranes	
Cartridges	4,800 (400 per cassette)
Cassettes	12 (9 operating, 3 spare)
Surface Area	15.6 ft^2 /cartridge
Flux Average	13.35 gal/ft^2 /day
Flux Peak	26.71 gal/ft^2 /day
Membrane Zone Air Required	
Scour	89 scfm/cassette
Biological	814 lbs/day
Blowers	
Quantity	4 (3 operating, 1 standby)
Design Point	390 CFM @ 8.9 psi
Electrical	50 HP, 460 V, 3 Phase, 60 Hz
Permeate Pumps	
Quantity	4 (3 operating, 1 standby)
Design Point	335 GPM @ 25' TDH
Electrical	5 HP, 460 V, 3 Phase, 60 Hz
RAS Pump	
Recycle Rate	6Q
Quantity	2 (1 operating, 1 spare)
Design Point	2,765 GPM @ 15.9' TDH
Electrical	15 HP, 460 V, 3 Phase, 60 Hz
WAS Pump	
Quantity	1
Design Point	130 GPM @ 25.5' TDH
Electrical	3 HP, 460 V, 3 Phase, 60 Hz

EXHIBIT VII-3 CONT.

DISINFECTION

CHAPTER VIII

VIII. DISINFECTION

Phase 1

No disinfection is required.

Phase 2 and 3

Disinfection will integrated with the package plants. It is anticipated that closed pipe ultraviolet disinfection systems will be used. Additional documentation for the anticipated equipment is included on Exhibit VIII-1. Installed equipment may be as shown on Exhibit VIII-1 or equal by another manufacturer.

Phase 4 thru 12

Beginning in Phase 4, TESI will construct a UV building. In addition to housing the blowers and chemical feed and storage equipment described in Chapter VII, this building will house ultraviolet disinfection systems. Three (3) units will be installed. The UV systems are package systems which consist of a channel structure with a flow control weir, submerged banks of UV bulbs and control systems. There is space dedicated to a future unit.

Design basis for the UV systems are shown on Exhibit VIII-2. Cut sheets are provided in Attachment A.

EXHIBITS

AQUIONICS
World Leader in Ultraviolet Technology

INLINE™

Compact Design, Premium Medium-Pressure Ultraviolet

The INLINE system uses high output medium pressure lamps oriented perpendicular to the fluid flow. This design has several unique advantages including the ability to **effectively treat very poor transmission fluids, or extremely high flow rates without bypass**. The compact design has **the smallest footprint** of any UV system and can treat gravity fed operations with very little pressure drop. These systems are ideally suited for treating process, waste, or reuse water. INLINE is an excellent choice where space is critical or flows are high.

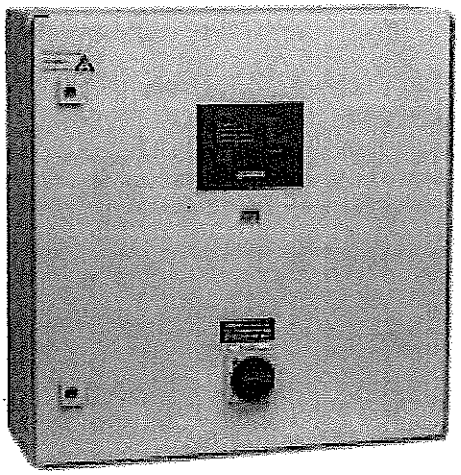

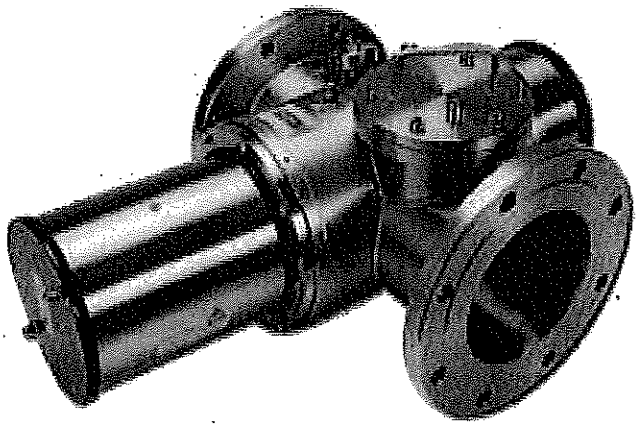

Aquionics' INLINE systems are cost effective and applicable to primary, secondary, and tertiary effluents as well as combined sewer overflows and stormwater.

SOME ADVANCED FEATURES:

- Compact design, smallest footprint.
- Low head loss.
- Designed for both gravity fed and pumped flow.
- Automatic quartz sleeve cleaning mechanisms insure consistent, reliable disinfection even when treating poor quality water.
- Heavy-duty, 316L stainless steel treatment chamber.
- High-intensity, medium-pressure UV lamps can be configured to treat any size flow requirements.
- Low capital and O&M costs.
- Easiest to install...Unit can be connected directly into existing piping system.
- Minimal maintenance requirements.
- Advanced, fail-safe, UV monitors.
- Eliminates chlorination and dechlorination processes.

21 KENTON LANDS ROAD • ERLANGER, KY 41018 • P: 859.341.0710 • T: 800.925.0440 • F: 859.341.1850 • WWW.AQUIONICS.COM

© 2003 Aquionics Inc INLINE is a trademark of Aquionics Inc

INLINE™ – SYSTEM FEATURES

CONTROL CABINET:

- Epoxy coated steel or stainless steel available.
- Available with NEMA 12 rating.
- 20 year design life transformers and capacitors to drive high power medium pressure lamps.

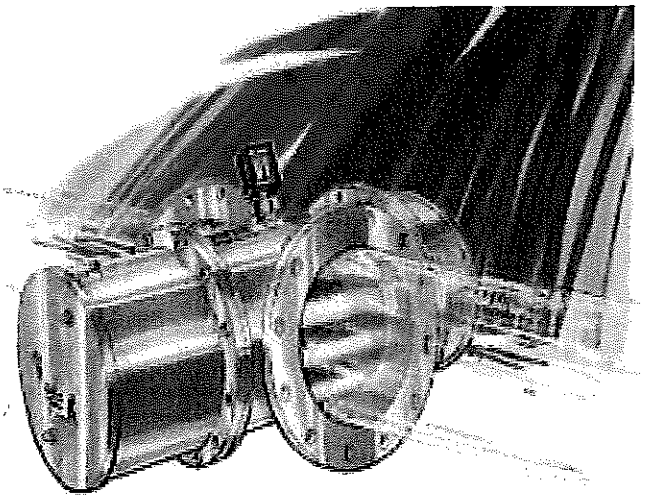

SOME OTHER SYSTEM FEATURES:

- Safety features include: cabinet interlocks, over-temperature shutoff, ground-fault protection, and numerous alarms and outputs.
- Mechanical and chemical wiper systems for automatic quartz sleeve cleaning..
- Sample ports and access hatches.

CONTROLS & MONITORING:

- Fail-safe UV monitor.
- All functions are microprocessor controlled.
- Many standard Controls, Alarms, and Input/Outputs are available.

LAMPS & SLEEVES:

- Medium-Pressure lamps emit *all* UV disinfection wavelengths.
- Single or multiple lamp configurations.
- High-purity quartz for maximum transmission.
- One 4000-watt multi-wave lamp is equivalent to 18 conventional low-pressure technology lamps.
- Lower maintenance cost than LP systems due to fewer lamps.

CHAMBER:

- 316L stainless steel construction.
- Compact, perpendicular lamp configuration.
- Automatic quartz sleeve cleaning.
- Access hatches.

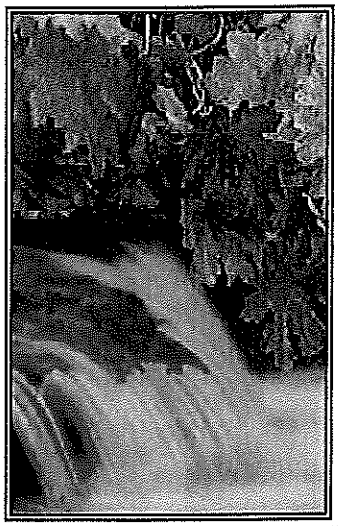

AQUIONICS
World Leader
in Ultraviolet Technology

21 KENTON LANDS ROAD ♦ ERLANGER, KY 41018 ♦ P: 859.341.0710 ♦ T: 800.925.0440 ♦ F: 859.341.0350 ♦ WWW.AQUIONICS.COM

DESIGN BASIS

ULTRAVIOLET DISINFECTION SYSTEM

Quantity	3, (2 operating, 1 standby)
Peak Design Flow	0.84 MGD
UV Transmittance	65%, minimum
TSS Concentration	30 mg/l, average
Disinfection Limit	<200 FC/100 ml
Electrical	460 V, 3 Phase, 60 Hz

EXHIBIT VIII-2

DISPOSAL

CHAPTER IX

IX. DISPOSAL

Phase 1

No disposal is required.

Phases 2 and 3

Rapid Infiltration Basins (RIBs) will be used for disposal as described in Chapter I, Section F. It is anticipated that RIB "C" will be the first constructed and subdivided as discussed in Chapter I. Treated wastewater will be pumped from the package plants directly to RIB "C" using an interim dosing force main.

Phase 4

As part of Phase 4, TESI will construct RIB dosing infrastructure consisting of a dosing pumping station, dosing flow meters, dosing storage tanks, additional RIBs, and dosing piping and control valves.

Treated effluent from the UV systems will flow to the dosing pumping station. Two (2) pumps in the station transmit effluent to the RIBs and dosing tanks. Flow to each RIB is controlled by an automated control valve. When open, effluent fills the RIB, when closed effluent fills the storage tank. Effluent is measured at the flow meter located in the dosing force main downstream of the dosing tanks.

Monitoring wells will be installed to monitor groundwater quality. Location of proposed wells and suggested sampling is described in the monitoring well report included as Attachment B.

Design basis for the RIBs, dosing water storage tank and dosing pumps are as shown on Exhibit IX-1. Cut sheets are provided on Attachment A.

EXHIBITS

DESIGN BASIS

RIBS

Measured Infiltration Rate	25.8 ft/day
Design Loading Rate	1.25 in/hr
Application Time	2 days/cycle
Drying Time	10 days/cycle
Cycle Length	12 days
Number of Basins	6
Infiltration Area	79,838 ft^2 (minimum)
Dosing Depth	2.5 ft. (maximum)
Dosing Rate	2,000 to 3,000 GPM
Dosing Time	8-12 hours

DOSING STORAGE TANK

Volume	1,500,000 gallons
Detention Time	24 hours (maximum)

DOSING PUMPS

Quantity	2 (1 operating, 1 standby)
Type	Vertical Turbine
Design Point	1,010 GPM @ 42' TDH
Electrical	15 HP/460 V/3 Phase/60 Hz

EXHIBIT IX-1

SLUDGE DEWATERING

CHAPTER X

X. SLUDGE DEWATERING

Phase 1

No sludge dewatering required

Phase 2 and 3

Sludge storage tanks will be integrated with the package plants. It is not anticipated that sludge dewatering other than gravity setting in sludge storage tanks will be required. Concentrated sludge will be hauled and disposed of at alternate facilities during these phases.

Phase 4 thru 12

A waste sludge dewatering facility (Sludge Building) will be constructed in Phase 4. Dewatering will allow TESI to produce a sludge cake suitable for landfill disposal. The source of waste sludge will be aerobic digester discussed in the next chapter. Sludge will be pumped from the digester and dewatered using a centrifuge. Polymer will be used to facilitate coagulation and dewatering. The centrifuge package includes a polymer makeup and delivery system to inject polymer into the centrifuge feed line. Centrate returns to the head of the plant via drains and the onsite gravity collection system.

The centrifuge equipment package also includes a sludge cake pump to deliver dewatered cake to the disposal dumpster. The basis of design of the dewatering equipment is given in Exhibit X-1.

EXHIBITS

BASIS OF DESIGN
SLUDGE DEWATERING

Quantity	1
Waste Activated Feed Sludge	1-2%
Dewatered Cake Solids	25% Minimum
Centrifuge Solids Capture	95% Minimum
Electrical	40 HP, 460 V/3 Phase/60 Hz
Synchronous Speed	3600 rpm

SLUDGE FEED PUMPS

Quantity	2 (1 operating, 1 spare)
Type	Progressive Cavity, Positive Displacement
Capacity	130 GPM @ 30 psi
Feed Solids	1-2%
Electrical	5 HP/460 V/3 phase/60 Hz

EXHIBIT X-1.

AEROBIC DIGESTION

CHAPTER XI

XI. AEROBIC DIGESTION

Phase 1

No sludge storage or digestion required

Phase 2 and 3

Sludge storage tanks will be integrated with the package plants. It is not anticipated that sludge dewatering other than gravity setting in sludge storage tanks will be required. Concentrated sludge will be hauled and disposed alternate facilities during these phases.

Phase 4 thru 12

An aerobic digester will be constructed in Phase 4. The digester provides for sludge storage prior to dewatering and digestion to produce a biologically stable sludge with limited odor. Sludge is pumped to the digester from the WAS/RAS list stations. A coarse bubble aeration system provides air for mixing and digestion. Two (2) blowers are located in the sludge building. Provisions are included in the design for construction of a future, second digester tank and additional blower.

Design basis information is shown on Exhibit XI-1.

EXHIBITS

DESIGN BASIS

AEROBIC DIGESTION

Volume	235,000 Gallons
Detention Time	38 Days (1)
Air Required	30 CFM/1000 Ft^3

(1) Detention time based on centrifuge operation at 20 hours/week.

BLOWERS

Quantity	2 (1 operating, 1 standby)
Type	Positive Displacement
Design Point	1,005 CFM @ 7 psi
Electrical	50 HP/460 V/3 Phase/60 Hz

EXHIBIT XI-1

ATTACHMENTS

ATTACHMENT A

EQUIPMENT CUT SHEETS

1. Raw Waste Pumps
2. Comminutor
3. Screen
4. Screenings Compactor
5. Flow Equalization Tank Blowers
6. Flow Equalization Tank Diffusers
7. Feed Forward Pumps
8. Submersible Mixers
9. Aeration Zone Blowers
10. Fine Bubble Diffusers
11. Membrane Zone Blowers
12. Membrane Cassettes
13. Permeate Pumps
14. RAS Pump
15. WAS Pump
16. UV System
17. Dosing Pumps
18. Centrifuge
19. Sludge Feed Pump
20. Aerobic Digester Blower
21. Aerobic Digester Diffusers

FLYGT	PERFORMANCE CURVE	PRODUCT NP3171.180	TYPE LT

DATE	PROJECT	CURVE NO	ISSUE
2010-12-07	wannendal rwps	63-614-00-7510	2

	1/1-LOAD	3/4-LOAD	1/2-LOAD
POWER FACTOR	0.85	0.80	0.70
EFFICIENCY	86.0 %	87.5 %	87.5 %
MOTOR DATA	---	---	---

RATED POWER	25	hp
STARTING CURRENT ...	177	A
RATED CURRENT ...	32	A
RATED SPEED	1160	rpm
TOT.MOM.OF INERTIA ...	0.25	kgm2
NO. OF BLADES	2	

IMPELLER DIAMETER: 274 mm

MOTOR #	STATOR	REV
25-18-6BB	07YSER	10

FREQ.	PHASES	VOLTAGE	POLES
60 Hz	3	460 V	6

GEARTYPE	RATIO
---	---

COMMENTS

INLET/OUTLET: -/ 10 inch

IMP. THROUGHLET: ---

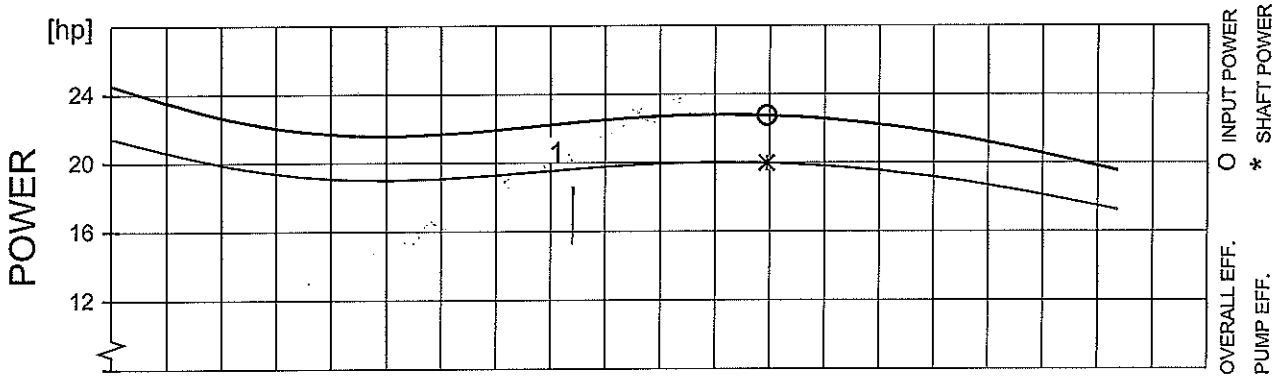

DUTY-POINT	FLOW[USgpm]	HEAD[ft]	POWER [hp]	EFF. [%]	NPSHre[ft]
1	2102	26.3	22.4 (19.7)	62.5 (71.1)	18.1
B.E.P.	2987	20.6	22.8 (20.0)	68.3 (77.8)	17.7

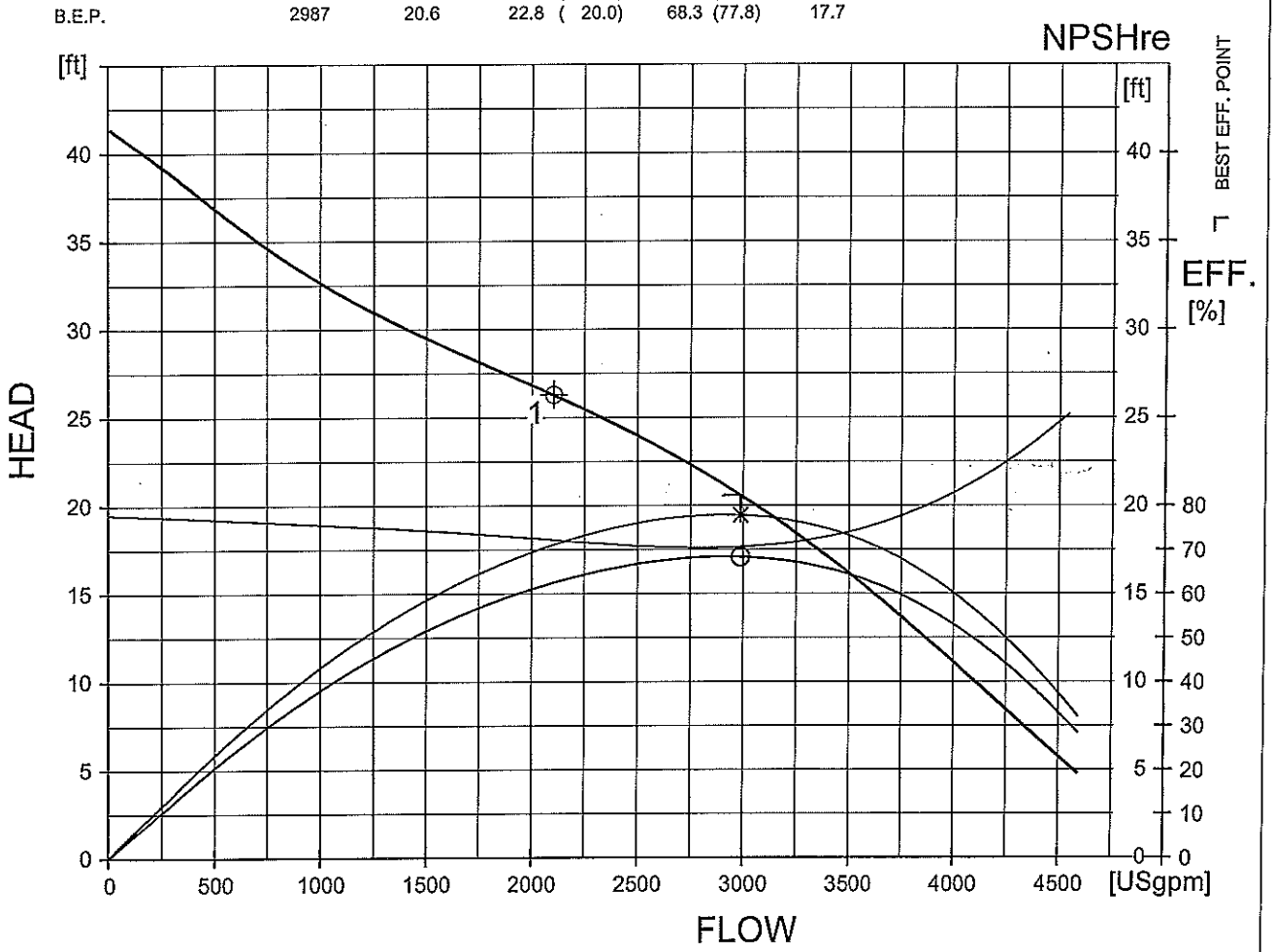

NPSHre = NPSH3% + min. operational margin

Performance with clear water and ambient temp 40 °C

FLYGT CURVE

FLYPS2.19.7.0 (20040913)

DRAWING NO. CDD0020-016-XDS-CD

NOTES: UNLESS OTHERWISE SPECIFIED

⚠1 WEIGHT OF UNITS EQUIPPED WITH TEFC ELECTRIC MOTORS.

REVISIONS							
ZONE	LTR	DESCRIPTION	ECO NO.	DATE			
	A	INITIAL RELEASE	CN-0626	5-20-05	PM	NS	MC
A5,7	B	ADDED 2.0 TO SUFFIX, ADDED 4016	CN-0710	6-20-05	CB		

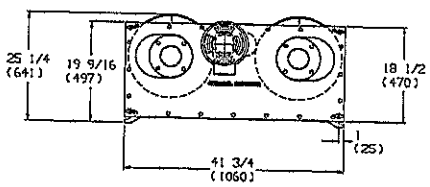

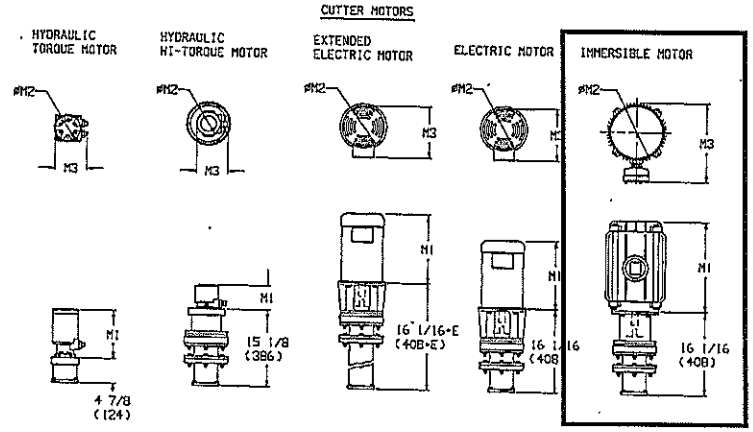

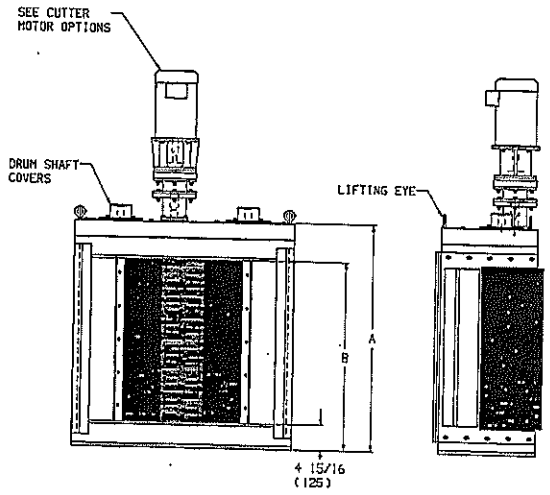

CUTTER MOTOR OPTIONS			
ELECTRIC	M1	M2	M3
5 HP			
TEFC	14 (356)	8 7/8 (225)	11 1/4 (286)
SUPER-E	13 3/8 (340)	9 (229)	12 (305)
XPFC	16 1/4 (413)	9 (229)	12 (305)
CHEM PRCS EXTRM SRVC	14 1/4 (362)	10 1/4 (260)	12 1/4 (311)
IMMERSIBLE	15 3/4 (400)	11 7/16 (291)	17 1/4 (438)
HYDRAULIC			
STANDARD	9 1/4 (235)	5 1/8 (130)	6 1/8 (156)
HI-TORQUE	4 3/4 (121)	4 1/2 (114)	5 1/2 (140)

EXTENDED SHAFT LENGTHS (E)																		
12 (305)	18 (457)	24 (610)	30 (762)	36 (914)	42 (1069)	48 (1219)	54 (1372)	60 (1524)	66 (1676)	72 (1829)	78 (1981)	84 (2134)	90 (2286)	96 (2438)	102 (2591)	108 (2743)	114 (2896)	120 (3048)

WEIGHT TABULATION			
MODEL	A	B	WEIGHT ⚠1
CDD2416-XDS2.0	36 1/8 (918)	28 7/8 (733)	1970 (894)
CDD3216-XDS2.0	44 (1118)	36 3/4 (933)	2195 (996)
CDD4016-XDS2.0	51 1/8 (1298)	44 1/2 (1130)	2295 (1041)

CONTROLLED

THIS DRAWING AND DATA ARE FULLY PROTECTED BY COPYRIGHT OWNED BY JWC ENVIRONMENTAL. THIS DRAWING AND DATA EMBODY PROPRIETARY INFORMATION WHICH IS THE CONFIDENTIAL PROPERTY OF JWC ENVIRONMENTAL, AND WHICH SHALL NOT BE COPIED, REPRODUCED, DISCLOSED TO OTHERS, OR USED IN WHOLE OR IN PART FOR ANY PURPOSE WITHOUT THE EXPRESS WRITTEN PERMISSION OF J.W.C.C. THIS DRAWING IS LOANED IN CONFIDENCE WITH THE UNDERSTANDING IT SHALL BE RETURNED ON DEMAND.

ITEM NO.	DIF REQD	PART NO.	NOMENCLATURE OR DESCRIPTION	SPECIFICATION OR MATERIAL
			PARTS LIST	

UNLESS OTHERWISE SPECIFIED DIMENSIONS ARE IN INCHES TOLERANCES ARE: FRACTIONS ± 1/16 DECIMALS .XX ± .XXX ± ANGLES ±

MATERIAL

FINISH

DO NOT SCALE DRAWING

CONTRACT NO.

APPROVALS		DATE
DRAWN	R. SADDL	6-20-05
CHECKED	P. MAI	6-09-05
MANUF.	M. OPTON	6-09-05
QUALITY	M. COCKRELL	6-14-05

JWC ENVIRONMENTAL
2600 South Gateway, Santa Ana, California 92707

CHANNEL MONSTER 16"-XDS
CHANNEL MONSTER-MODEL CDDX16-XDS
2" SINGLE DRIVE CONFIGURATION

SIZE	CODE IDENT NO.	DRAWING NO.	REVISION
D	53242	CDD0020-016-XDS-CD	B

SCALE 3/32 SHEET 1 OF 1

ALL RIGHTS RESERVED

2

3

PARKSON CORPORATION

HYCOR® ROTOSHEAR®

INTERNALLY-FED ROTARY WEDGEWIRE SCREENS

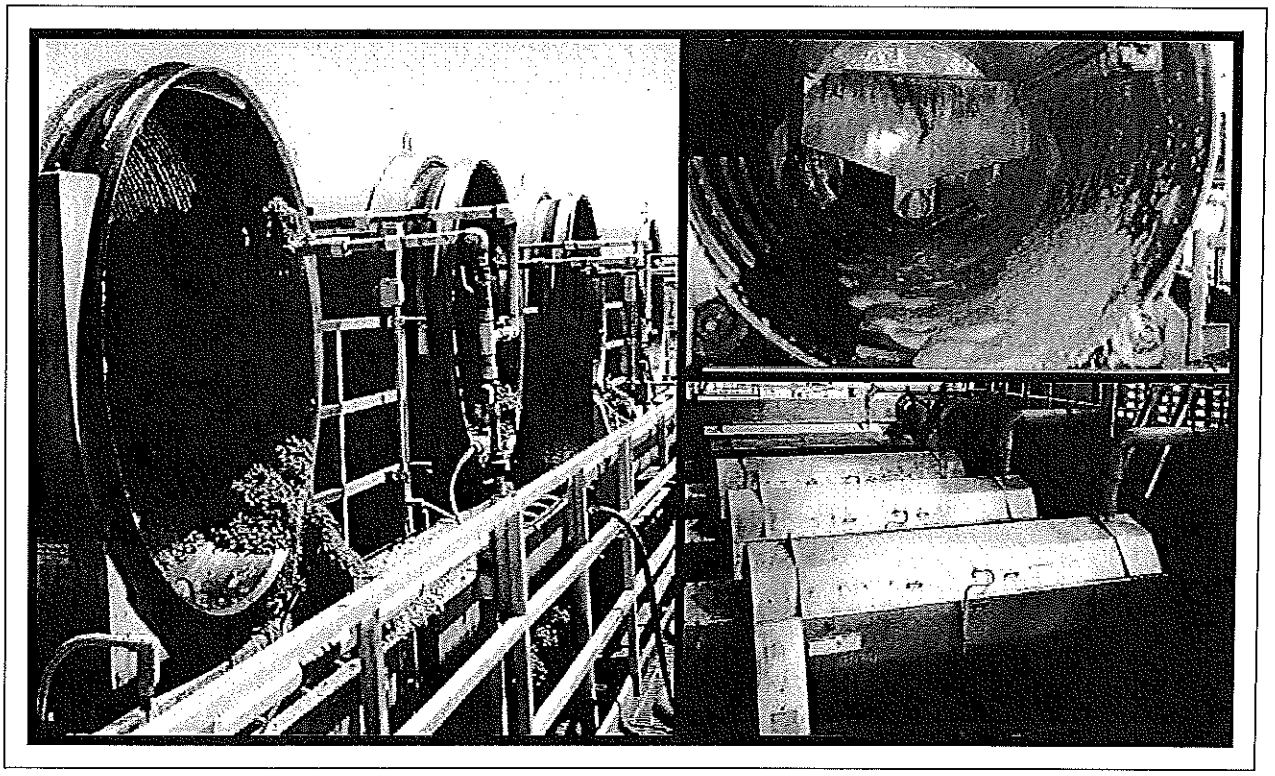

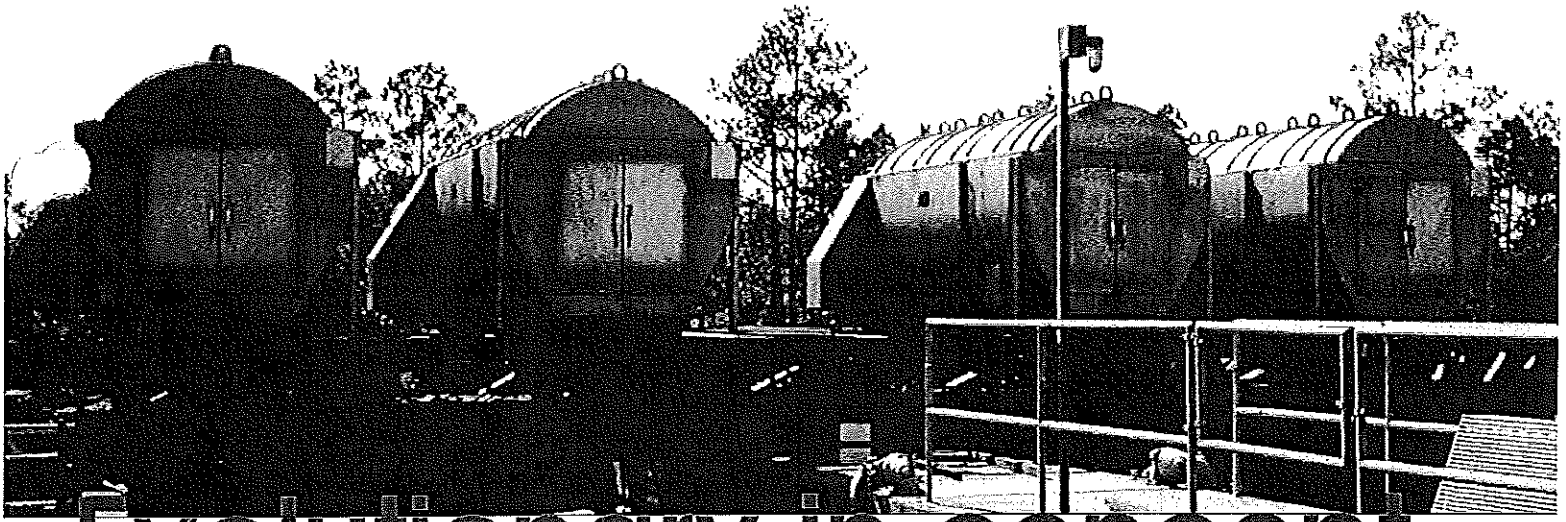

Evolutionary in concept

The Hycor® Rotoshear® screen is a high capacity fine screen that was developed over a decade ago. It has been continually updated with new design enhancements; and today, is represented by a complete family of screens. There are over a dozen models with many application specific custom features. Opening sizes range from 0.010" to 0.100" (.25 to 2.5 mm) and hydraulic capacities from 450 to over 13,000 GPM (102 to 2955 M^3/H). The material standard is 304 stainless, but 316 and L grades are available as well.

Because the Rotoshear screen is a high capacity screen with many user-friendly options, it is the choice for efficient wastewater screening and improved by-product recovery in a multitude of applications. Heavy-duty models are available for heavy solids loadings. One, in fact, handles 25 wet tons per hour in a slaughterhouse application.

In wastewater treatment plants, the Rotoshear unit is respected as a fine screen for pretreatment and primary treatment as alternative technology to replace clarifiers. Meat processors, food processors, tanneries, textile mills, petrochemical plants, and recyclers rely on it for product recovery and wastewater treatment. Pulp and paper mills use it for fiber recovery and rejects handling.

HIGHLY EFFICIENT OPERATION

The Rotoshear unit is an internally-fed rotary wedgewire cylindrical screen that operates with minimal attendance. Influent enters through the inlet and flows into a headbox. The headbox fills and the influent cascades over the weirs and contacts two sides of the rotating cylinder screen. As the influent hits the turning screen, the solids are caught inside the cylinder and the liquid passes through the screen into the process or on for further treatment. Diverters on the cylinder move the solids along the length of the screen to discharge. The unit is equipped with spray bars to clean the screen when it's not in contact with incoming flow.

WEDGEWIRE CONSTRUCTION MAXIMIZES CAPTURE

The Rotoshear screen is constructed of quality 304 stainless steel wedgewire, recognized for its ability to handle stringy fibers, greasy solids and high concentrations of suspended solids without blinding. It is

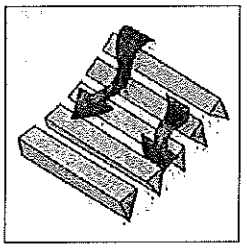

corrosion-resistant, durable, and will give years of trouble-free service. The entire wedgewire cylinder is surrounded by stainless ribbing for stability and long life.

But wedgewire for high capacity capture is only part of the story. The Hycor Rotoshear unit is created with a precise relationship of headbox size to cylinder length which creates a drying zone to allow free drainage of screenings as they travel along to discharge.

BUILT FOR HIGH CAPACITY

The standard municipal Rotoshear unit headbox is an open tub style with a double weir that easily handles high flows while minimizing surging. There is also a "medlow" headbox style, with a flatter bottom, designed to handle heavy or large solids in medium to low flow in industrial applications.

SPROCKET AND CHAIN DRIVE DESIGNED FOR LONG YEARS OF SERVICE

The Rotoshear unit employs positive drive

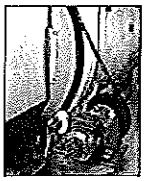

operation, with the chain driving the screen. The chain is durable steel with stainless available as an option. Manual chain oilers are standard for longer chain life and ease of maintenance.

The entire operation is driven by an efficient gearmotor – in sizes from $1/2$ to 5 HP. Explosion-proof motors are also available.

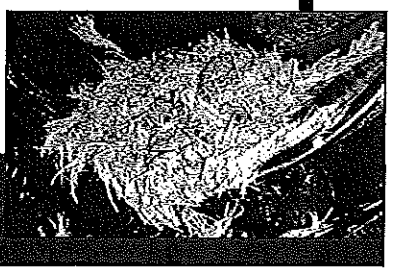

FAST, EASY INSTALLATION

Standard Hycor® Rotoshear® units are shipped assembled – only piping, power and water require on-site connections. Rotoshear screens are available with custom options to simplify installation. These include flanges, support legs, and drain pans to make the unit free standing, and end enclosures are available to control odors.

AUTOMATIC SPRAY CLEANING

The Rotoshear unit has two separate spray systems: an internal spray to clean the screening surface of the cylinder, and an external spray system to keep the screen openings clear.

The spray system is designed for easy nozzle cleaning. Spray bars in many units have snap-action connectors that automatically lock in place for easy access and replacement.

PROTECTED AND OPERATOR FRIENDLY

Hycor equipment is designed to be safe and protect the operator. All rotating parts, such as trunnion wheels and chains, are completely enclosed. Screen covers protect the rotating screen and interlock switches disengage the motor if covers are lifted while the equipment is in operation.

Strategically positioned lube ports provide easy access for greasing trunnion wheels and stabilizer pads.

A cleanout port allows the headbox to be thoroughly cleaned and drained.

AUTOMATIC OPTIONS

The Rotoshear screen requires very little operator attention, and with optional control panels and solenoid valves, the unit can be equipped for automatic on and off operation. Sprays can be set to perform automatic washdown at timed intervals.

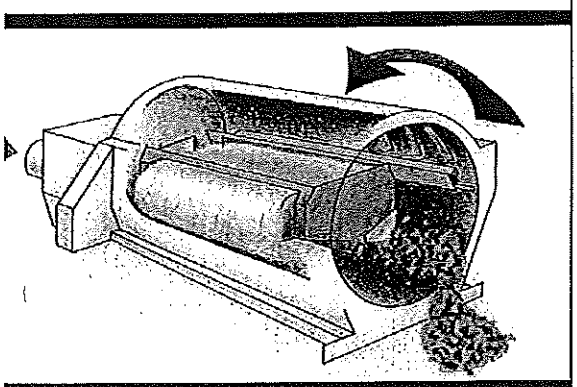

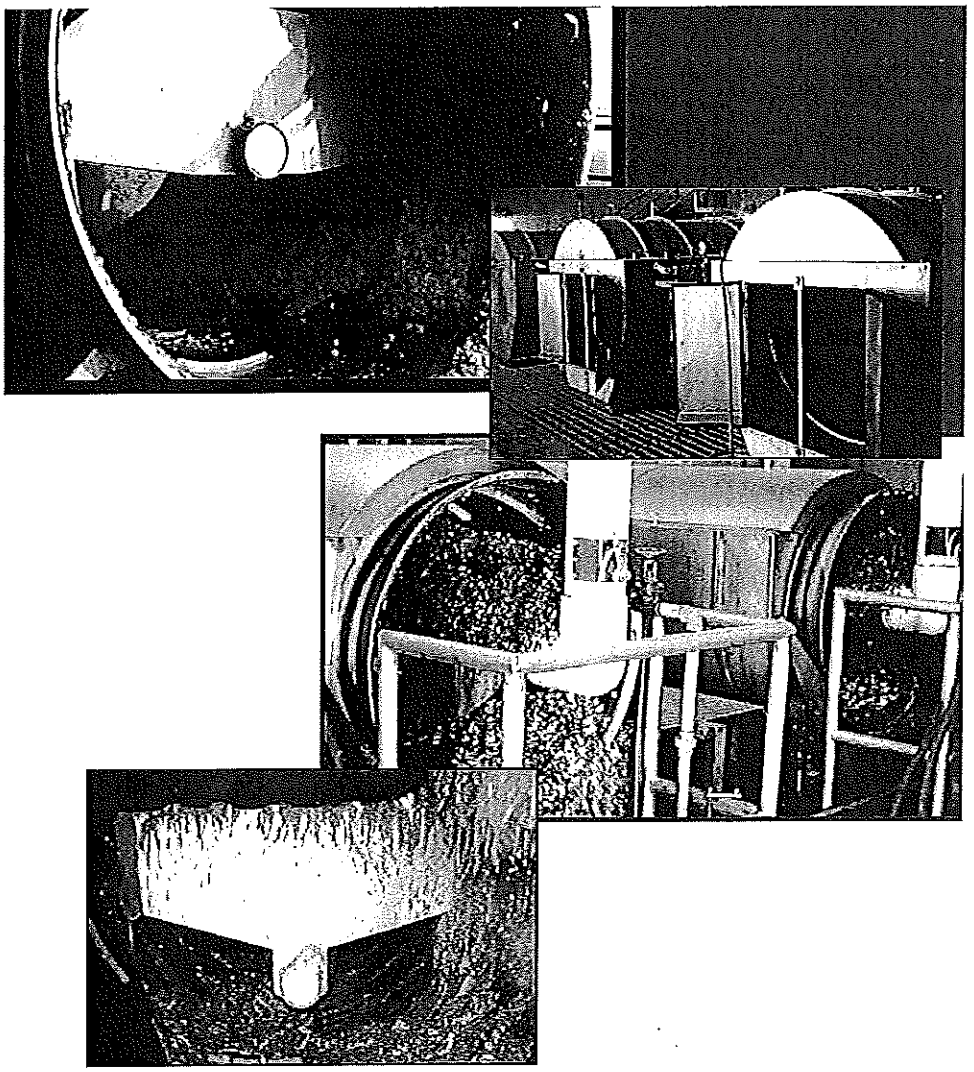

DIMENSIONS IN INCHES (METRIC EQUIVALENTS)

Model	Length	Width	Height	Hp
HRS2448	93 (2362)	41 (1041)	33 (838)	1/2 (.37)
HRS3648	110 1/2 (2807)	51 (1295)	47 1/2 (1217)	1/2 (.37)
HRS3672	134 1/2 (3416)	51 (1295)	48 (1219)	1/2 (.37)
HRS3696	158 1/2 (4051)	52 1/2 (1334)	48 (1219)	1 (.75)
HRS4860	136 1/2 (3462)	83 1/2 (2121)	64 3/4 (1645)	1 (.75)
HRS4872	148 1/4 (3767)	83 1/2 (2121)	64 3/4 (1645)	1 (.75)
HRS4884	160 1/4 (4071)	83 1/2 (2121)	64 3/4 (1645)	1 (.75)
HRS4896	172 1/4 (4376)	83 1/2 (2121)	64 3/4 (1645)	1 (.75)
HRS6072	146 1/2 (3759)	90 (2286)	80 1/2 (2045)	1 (.75)
HRS6096	170 1/2 (4318)	90 (2286)	80 1/2 (2045)	1 1/2 (1.11)
HRS60120	194 1/2 (4940)	90 (2286)	80 1/2 (2045)	2 (1.5)
HRS60160	235 3/4 (5988)	87 (2210)	80 1/2 (2045)	2 (1.5)
HRS80160	247 1/2 (6287)	107 (2718)	100 1/2 (2553)	3 (2.2)

All dimensions are approximate and rounded up to the nearest 1/4".

PARKSON CORPORATION

ROTOPRESS®
Screenings Compactor

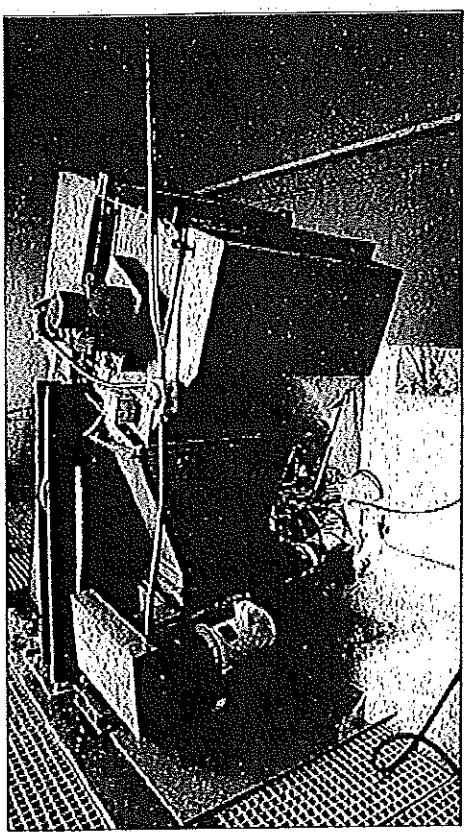

The ROTOPRESS dewaters wet screenings from a bar/filter screen, greatly reducing disposal costs.

Lower operation and maintenance costs result from eliminating manual handling of the solids and reduction of the volume going to landfill. Savings provide a fast pay-back of the initial ROTOPRESS investment.

The fully-enclosed ROTOPRESS minimizes odors, insect problems, and unsanitary handling to protect operating personnel.

The low-horsepower motor produces high pressing thrust.

The optional *discharge extension* transports screenings additional distances, while it increases dryness.
A spring-loaded *counterforce*, for use where space is limited, also increases compaction.

The ROTOPRESS can be operated manually or in conjunction with mechanical bar or rotary drum screens.

The ROTOPRESS reduces the volume of screenings up to 75%, and depending on the nature of the feed solids, produces 40-50% dry solids in the discharge.

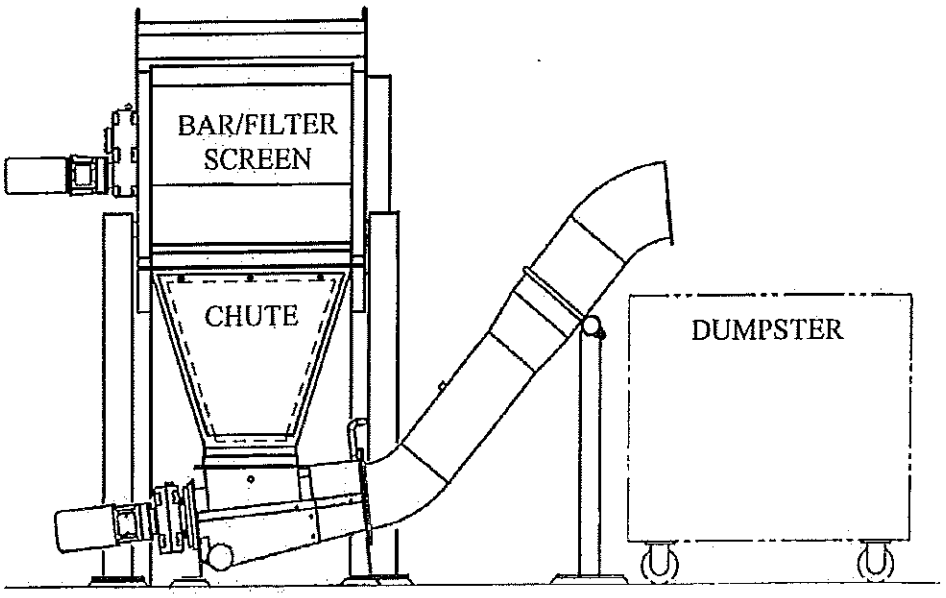

FEATURES	BENEFITS
Integral spray header	Less organics in discharge to landfill
Adjustable counterforce (optional)	Enhanced dryness
Automatic overflow system	Inlet does not overflow when feed solids are less than 8%
Hardened screw surface	Less wear in abrasive applications
Simple construction	Low maintenance
Standard materials of 304 stainless steel	Corrosion resistance for long life

SPECIFICATIONS	Capacity: 35-140 cu.ft. / hr., depending on screenings composition
	Weight: 463 lbs

DIMENSIONS

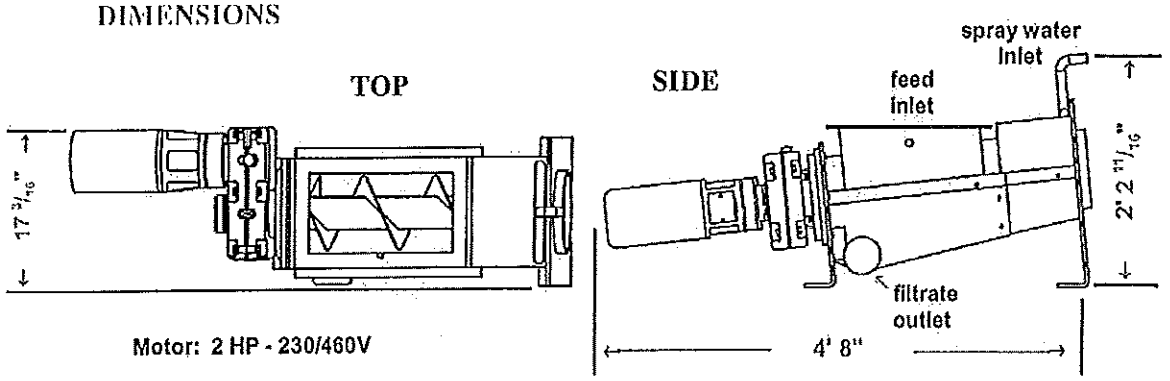

RP1401

PARKSON CORPORATION

www.parkson.com

AN AXEL JOHNSON INC. COMPANY

Parkson Florida
Corporate
2727 NW 62nd Street
P.O. Box 408399
Fort Lauderdale, FL
33340-8399
P 954.974-6610
F 954.974-6182

Parkson Illinois
29850 N. Skokie Hwy.
(U.S. 41)
Lake Bluff, IL
60044-1192
P 847.473.3700
F 847.473-0477

Parkson Canada
9050 Ryan Avenue
Dorval, Quebec
H9P 2M8
P 514.636-8712
F 514.636-9718

Parkson México
Callejón Catita
San Diego Churubusco
Delegacion Coyoacán
04120, México, D.F.
P 011.52.5.688.43.68
F 011.52.5.601.09.63

Parkson do Brasil Ltda.
Calcada dos Mirtilos, 15
CEP 06453-000
Barueri/SP Brazil
P 011.55.11.4688-0336
F 011.55.11.4688-0218

© 2002 Parkson Corporation 1/02
Printed in U.S.A. On Recycled Paper, 10% Post Consumer Waste

7.2.4 Com-paK Plus Dimensional Overview

BB Series

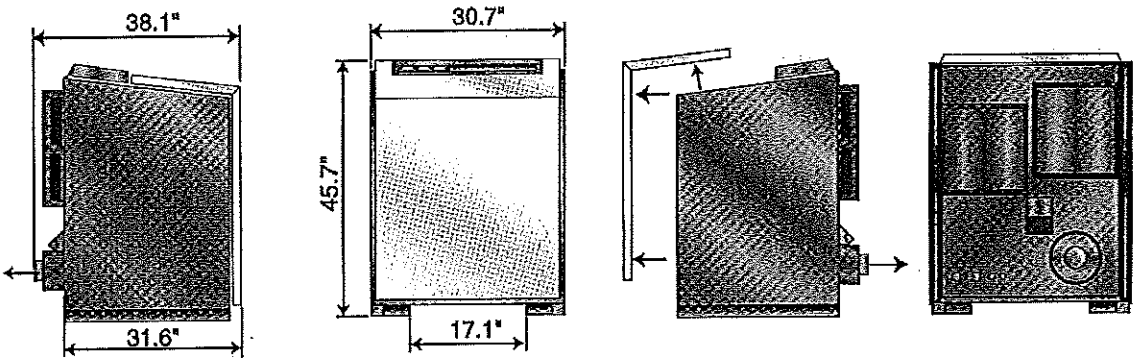

DB Series

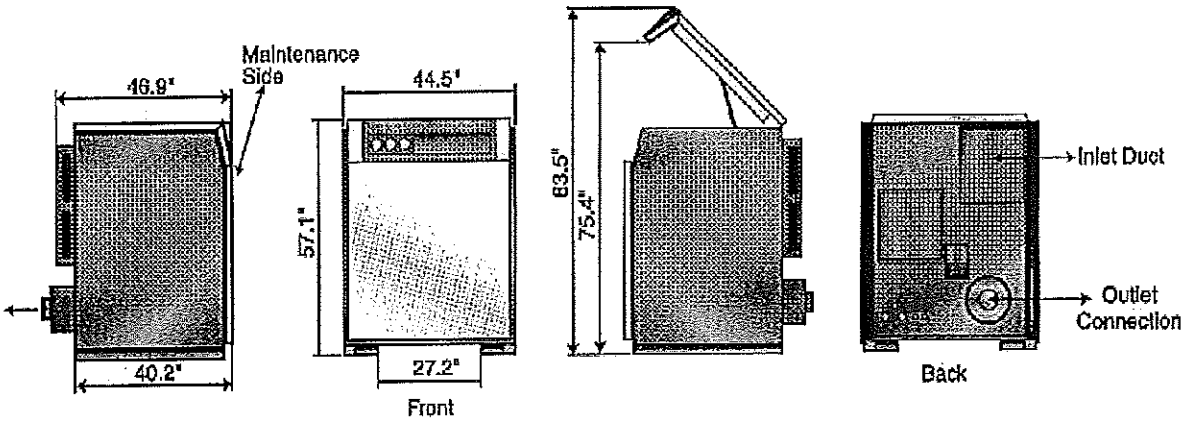

Com-paK Plus Series

Com-paK Plus Model	Omega Plus Blower Model	Maximum Ratings				Conn. Size DN / In.	Max. Est. Weight Lbs.
		Flow icfm	Pressure psig	Speed rpm	Motor hp		
BB53-C	21P	152	15	6200	15	50 / 2	593
BB68-C	22P	194	15	6000	20	65 / 2.5	637
BB88-C	23P	265	15	5800	20	65 / 2.5	653
DB130-C	41P	410	15	5000	40	80 / 3	1115
DB165-C	42P	526	15	4800	50	100 / 4	1390
DB235-C	43P	752	15	4500	50	100 / 4	1450

TECHNICAL PROPOSAL	OMEGA PLUS	More air flow With less energy	KAESER OMEGA BLOWERS

Project Reference: Flow EQ Blower A
Location: Headworks Bldg
Customer: 319-139

Prepared By: SCH
Date: 12/03/10

KAESER

Com-paK Plus BB 68C / 22P

Rotary Blower Package

Gauge pressure application

For an oil-free conveying medium

Available with CE Manufacturer's Declaration within the meaning of Machinery Directive 98/37 EG, a. II B

Gas handled		Dry Air
Effective inlet air flow Q_1 at design point	180	icfm
Inlet flow at standard conditions: Standard conditions 14.7 psia, 68 °F and 36% RH	180	scfm
Blower speed at design conditions:	5435	rpm
Design conditions:		
Inlet pressure (absolute)	14.7	psia
Inlet temperature	68	°F
Pressure difference	10.3	psig
Discharge pressure (absolute)	25.0	psia
Discharge temperature	196	°F
Blower shaft power	11.1	bhp
Motor rated power	15.0	hp
Motor enclosure	TEFC	
Motor voltage / frequency	460V/ 60Hz	
Type of cooling	Air cooled	
Connection size	2 1/2"	
Volumetric efficiency	0.82	
	with enclosure	
Estimated noise level to DIN EN ISO 2151, figures ± 3 dB(A) with sound insulated piping	70	dB(A)
Dimension (L x W x H) inches	38 x 31 x 46	
Estimated Weight	ca. 672	lbs

V 7.2 AD VERSION 24/01/06 T1

Kaeser Compressors, Inc.
P.O. Box 946
Fredericksburg, VA 22408
Tel.: (540) 898-5500 Fax.: -5520

TECHNICAL PROPOSAL	OMEGA PLUS	More air flow With less energy	KAESER OMEGA BLOWERS

Project Reference: Flow EQ Blower B
Location: Headworks Bldg
Customer: 319-139

Prepared By: SCH
Date: 12/03/10

KAESER

Com-paK Plus DB 235C / 43P

Rotary Blower Package

Gauge pressure application

For an oil-free conveying medium

Available with CE Manufacturer's Declaration within the meaning of Machinery Directive 98/37 EG, a. II B

Gas handled		Dry Air
Effective inlet air flow Q_1 at design point	532	icfm
Inlet flow at standard conditions: Standard conditions 14.7 psia, 68 °F and 36% RH	532	scfm
Blower speed at design conditions:	3310	rpm
Design conditions:		
Inlet pressure (absolute)	14.7	psia
Inlet temperature	68	°F
Pressure difference	10.3	psig
Discharge pressure (absolute)	25.0	psia
Discharge temperature	192	°F
Blower shaft power	30.3	bhp
Motor rated power	40.0	hp
Motor enclosure	TEFC	
Motor voltage / frequency	460V/ 60Hz	
Type of cooling	Air cooled	
Connection size	4"	
Volumetric efficiency	0.85	
	with enclosure	
Estimated noise level to DIN EN ISO 2151, figures ± 3 dB(A) with sound insulated piping	69	dB(A)
Dimension (L x W x H) inches	47 x 44 x 57	
Estimated Weight	ca. 1526	lbs

V 7.2 AD VERSION 24/01/06 T1

Kaeser Compressors, Inc.
P.O. Box 946
Fredericksburg, VA 22408
Tel.: (540) 898-5500 Fax.: -5520

6

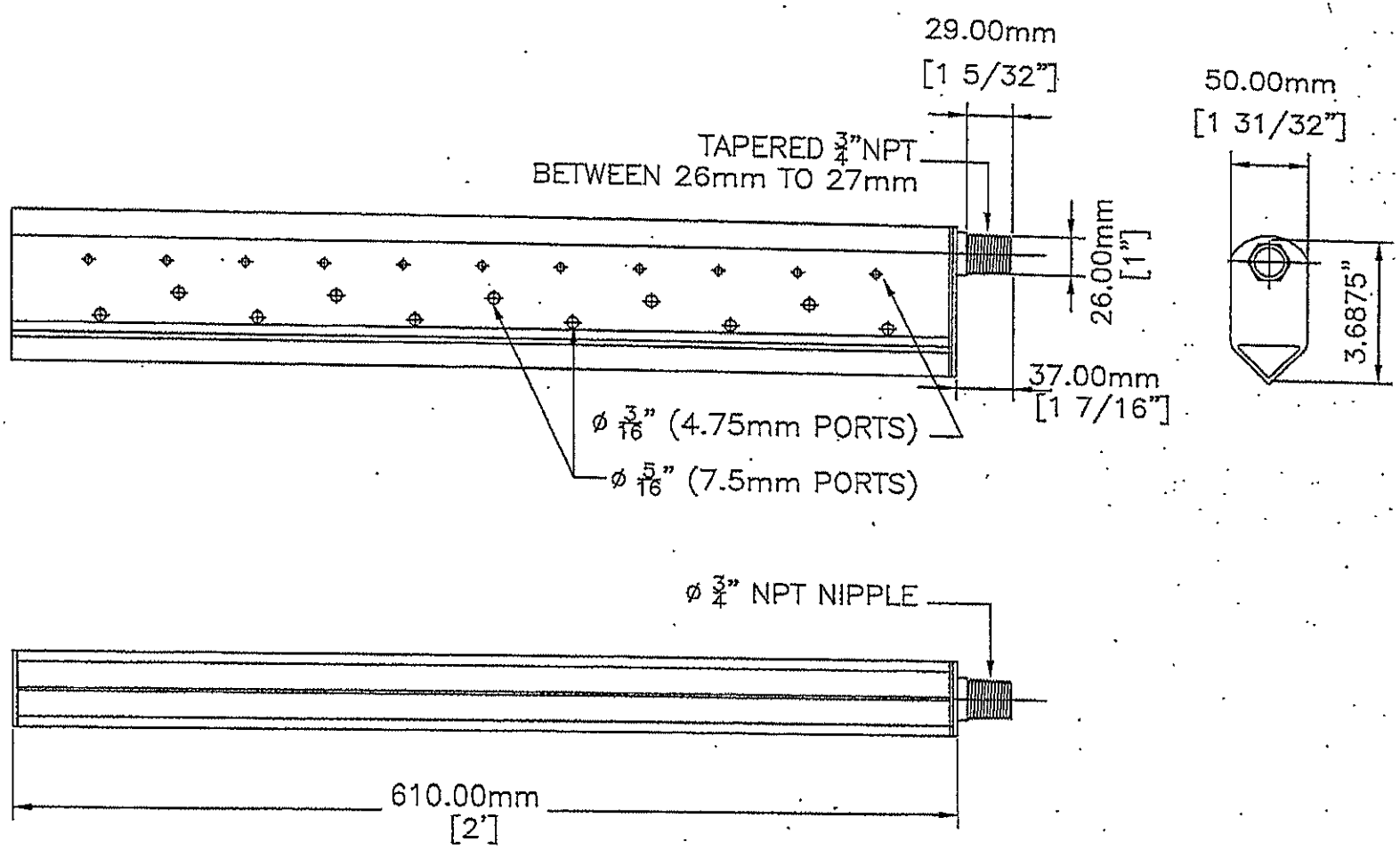

WIDE BAND COARSE BUBBLE DIFFUSER

MATERIAL:304L S.S

**NOTE
STAINLESS STEEL MODEL PROVIDED WITH 304 SS, INTEGRAL HEX NUT
AND ø ¾"NPT CONNECTION

PART No.	PART NAME	MATERIAL	Q'TY	REMARKS

COARSE BUBBLE DIFFUSER

SCALE : NTS	DATE :	REVISED : M1	DRAWN BY :

SSI Stamford Scientific International, Inc.

DWG No. 6022-SD-001(WBCB)

PROJECT

7

FLYGT	PERFORMANCE CURVE	PRODUCT NP3102.980	TYPE MT
DATE 2010-12-03	PROJECT 319-139 Feed Forward	CURVE NO 63-463-00-3730	ISSUE 3

	1/1-LOAD	3/4-LOAD	1/2-LOAD
POWER FACTOR	0.81	0.75	0.63
EFFICIENCY	85.0 %	85.0 %	83.5 %
MOTOR DATA	---	---	---

RATED POWER	5	hp
STARTING CURRENT ...	42	A
RATED CURRENT ...	6.8	A
RATED SPEED	1745	rpm
TOT.MOM.OF INERTIA ...	0.027	kgm2
NO. OF BLADES	2	

IMPELLER DIAMETER	172 mm
MOTOR #	18-11-4AL
STATOR	01YSER
REV	11
FREQ.	60 Hz
PHASES	3
VOLTAGE	460 V
POLES	4
GEARTYPE	---
RATIO	---
COMMENTS	
INLET/OUTLET	-/ 4 inch
IMP. THROUGHLET	---

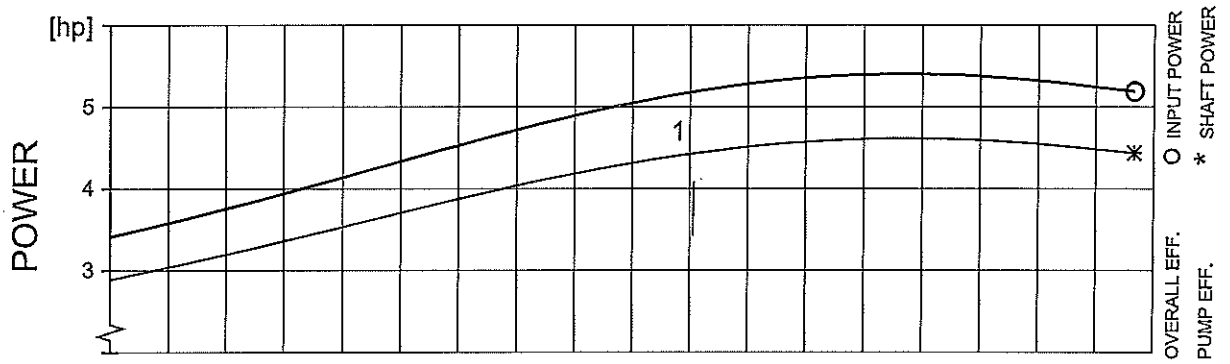

DUTY-POINT	FLOW[USgpm]	HEAD[ft]	POWER [hp]	EFF. [%]	NPSHre[ft]
1	504	25.3	5.19 (4.44)	62.1 (72.7)	13.0
B.E.P.	487	25.9	5.15 (4.40)	62.2 (72.8)	13.1

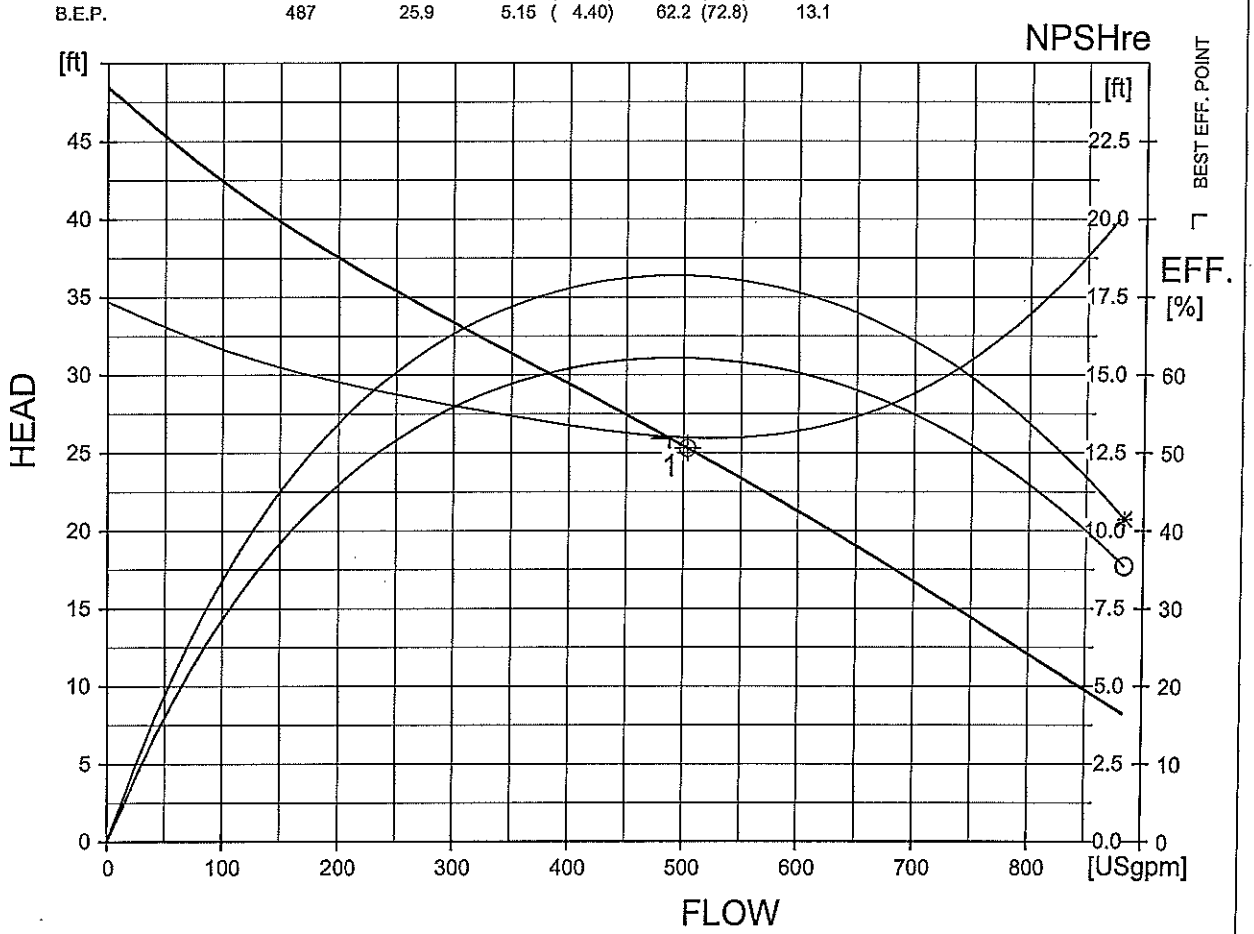

NPSHre = NPSH3% + min. operational margin

Performance with clear water and ambient temp 40 °C

FLYGT CURVE

FLYPS2.19.7.0 (20040913)

60 Hz

The compact ABS submersible mixers have been designed for a wide range of applications. The units are suitable to achieve flow pattern in large tanks and open waters for mixing and stirring applications.

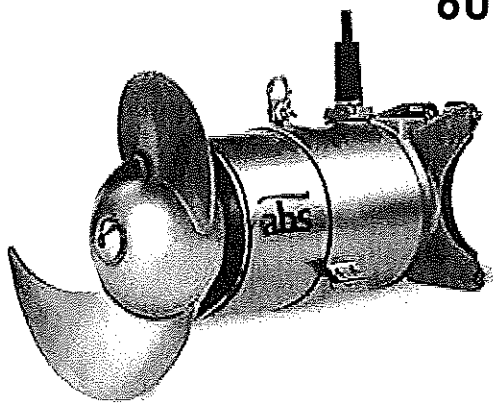

Construction
The submersible mixer is designed as a compact, water pressure-tight unit including propeller and integrally casted installation bracket for the attachment on the square guide tube. Different versions with a bracket for vertical angle adjustment, a flushing system (option) for the mechanical seal and / or a flow ring can be chosen.
The mixers are available in two standard material versions:
EC = cast iron version, CR = stainless steel version

Motor
Squirrel cage, 3-phase, 8-pole 60 Hz, insulation class F (155 °C/ 311 °F), max. submergence 20 m (66 ft).

Propeller
Technically optimized, axially operating 2- or 3-blade propellers with very good self-cleaning effect for vibration-free operation. The propellers are designed to achieve high thrusts and therefore a high flow capacity in axial direction.

Solids deflection ring
The patented solids deflection ring protects the mechanical seal from damage by ingress of solid or fibrous matter.

Bearings
All bearings are lubricated-for-life and maintenance-free, with a calculated life time of more than 100,000 h.

Shaft sealing
Mechanical seal: Silicon carbide / Silicon carbide.
O-Rings / lip seals: NBR.

Seal monitoring
DI-system with a sensor in the oil chamber and junction box.

Temperature monitoring
TCS-Thermo-Control-System with thermal sensors in the stator which open at 140 °C (284 °F).

Cable: 10 m (32.8 ft) sewage resistant CSM material. Type: H07RN.

Options: Explosion-proof version, flow ring, seals in viton, cable protection sleeve, PTC or PT 100 in the stator.

Accessories: Lifting bracket, vertical angle adjustment, shock absorber, vortex shield, flush system for the mechanical seal.

Weight: Without flow ring: 96 kg (212 lbs). With flow ring: 102 kg (225 lbs).

Motor data

Motor	A 35/8	A 46/8
Rated power (kW)	3.5 (4.7 hp)	4.6 (6.2 hp)
Rated current at 460 V (A)	8.7	10.3
Speed (min^{-1})	858	841
Motor efficiency (%)	76	77
Power factor	0.66	0.74

Mixer performance table

Hydraulic No.	Mixer power P_P in kW (hp)	Motor kW (hp)
4021	1.9 (2.5)	3.5 (4.7)
4022	2.2 (3.0)	3.5 (4.7)
4023	2.7 (3.6)	3.5 (4.7)
4024	3.4 (4.6)	4.6 (6.2)
4031	4.4 (5.9)	4.6 (6.2)
4041*	1.5 (2.0)	3.5 (4.7)
4042*	1.7 (2.3)	3.5 (4.7)
4043*	2.1 (2.8)	3.5 (4.7)
4044*	2.6 (3.5)	4.6 (6.2)
4051*	3.4 (4.6)	4.6 (6.2)

*with flow ring

Material comparison: Europe / USA

EN 1561; EN-GJL-250	ASTM A48; Class 35 B
EN 1563; EN-GJS-400-18	ASTM A536, 60-40-18
1.4021	ASTM / AISI 420
1.4401	ASTM / AISI 316
1.4404	ASTM / AISI 316 L
DIN 17 445; 1.4408	ASTM / AISI CF-8M
DIN 17 440; 1.4571	ASTM / AISI 316 Ti

Materials

Part	EC (cast iron)	CR (stainless steel)
Motor housing	EN-GJL-250, painted	1.4571 (AISI 316)
Sliding bracket	EN-GJL-250/EN-GJS-400-18 painted, polyamide	1.4408 / polyamide (CF-8M)
Motor shaft	1.4021 (AISI 420)	1.4404 (AISI 316)
Propeller	1.4571 (AISI 316)	1.4571 (AISI 316)
Fasteners	1.4401 (AISI 316)	1.4401 (AISI 316)

abs
We know how water works

ABS submersible mixer RW 400, 60 Hz GB 2009-08-10 | We reserve the rights to alter specifications due to technical developments.

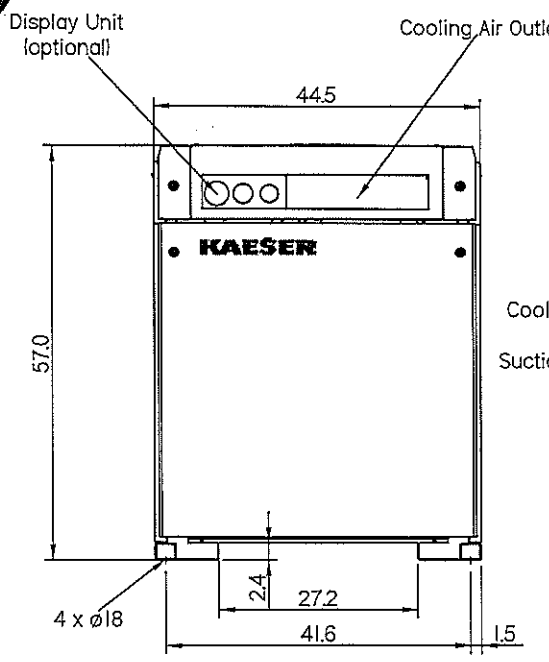

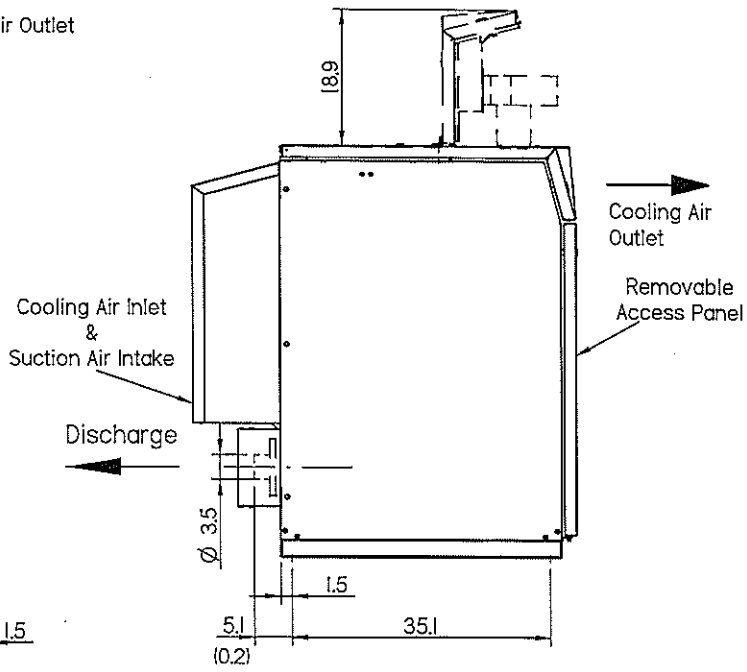

Discharge end of Blower paK
with Check Valve
( ) = Dimension without Check
Valve

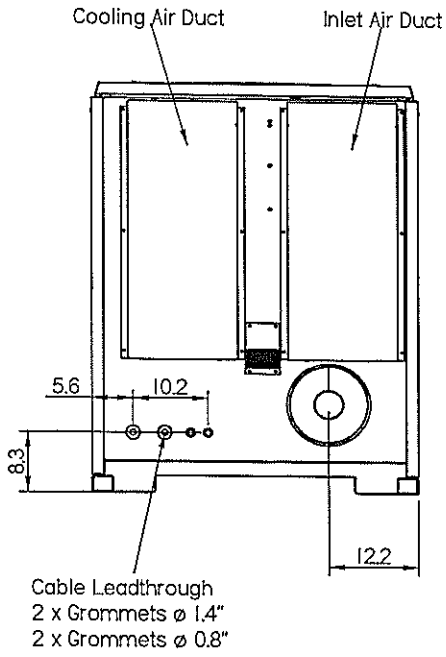

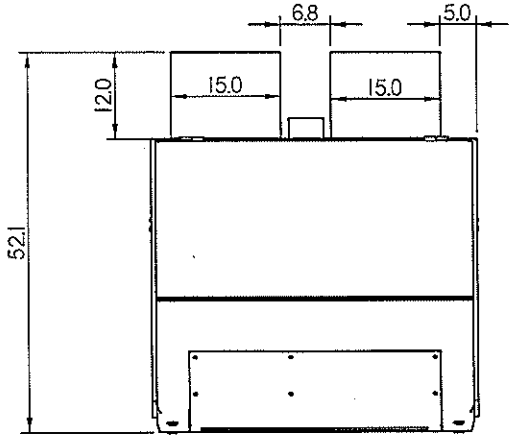

Dimensions are given in inches

KAESER COMPRESSORS	OMEGA Com-paK DB 130 C with Sound Enclosure for Ambient Inlet		E		
			D		
			C		
			B		
	Drawing #: TD 844		A		
			Revision	Date	Int
Ref. no.: MB001148.dft	Revision:	Date: November 1, 2001	Drawn by:	Page 1	
Part no.:			Approved by:		

TECHNICAL PROPOSAL	OMEGA PLUS	More air flow With less energy	KAESER OMEGA BLOWERS

Project Reference: 319-139 Prepared By: SCH

Location: Aeration Zone Date: 12/07/10

Customer: 319-139

KAESER

Com-paK Plus DB 130C / 41P

Rotary Blower Package

Gauge pressure application

For an oil-free conveying medium

Available with CE Manufacturer's Declaration within the meaning of Machinery Directive 98/37 EG, a. II B

Gas handled		Dry Air
Effective inlet air flow Q_1 at design point	378	icfm
Inlet flow at standard conditions: Standard conditions 14.7 psia, 68 °F and 36% RH	378	scfm
Blower speed at design conditions:	4535	rpm
Design conditions:		
Inlet pressure (absolute)	14.7	psia
Inlet temperature	68	°F
Pressure difference	9.5	psig
Discharge pressure (absolute)	24.2	psia
Discharge temperature	180	°F
Blower shaft power	20.1	bhp
Motor rated power	25.0	hp
Motor enclosure	TEFC	
Motor voltage / frequency	460V/ 60Hz	
Type of cooling	Air cooled	
Connection size	3"	
Volumetric efficiency	0.88	
	with enclosure	
Estimated noise level to DIN EN ISO 2151, figures ± 3 dB(A) with sound insulated piping	72	dB(A)
Dimension (L x W x H) inches	47 x 44 x 57	
Estimated Weight	ca. 1239	lbs

V 7.2 AD VERSION 24/01/06 T1

Kaeser Compressors, Inc.
P.O. Box 946
Fredericksburg, VA 22408
Tel.: (540) 898-5500 Fax.: -5520

PRODUCT SPECIFICATION SHEET

EDI FLEXAIR® MiniPanel™ Diffuser

Fine Pore Flexible Membrane Technology

High Oxygen Transfer Efficiency for Maximum Customer Value

- Highest horizontal projected diffuser area for maximum OTE performance
- Efficient geometry supports high density installations of over 65% floor coverage
- Precision die cut openings for high oxygen transfer, uniform air release, and low operating pressure
- Nano Pore™, Micro Pore™ and Standard perforation options available for engineered OTE and operating pressure requirements
- Advanced technology premium quality membranes available in EPDM, urethane, or special polymer blends, plus BioShield™ and BioCide™ technologies for reduced fouling and maintenance
- Nominal 4.75-inch (117 mm) diameter x 54-inch (1359 mm) length for a total active membrane area equal to 366 in^2 (0.236 m^2)
- Integral triple check valve design prevents entry of liquid/ solids into piping. Ideal for on / off applications
- Resistant to fouling and plugging for low maintenance
- ABS and PVC construction for maximum chemical, temperature, and UV resistance
- Spectrum™ Saddle Mount provides maximum mechanical integrity, ease of installation and maintenance, and ability to relocate or add diffusers for process modifications
- Non-buoyant design for reduced stress on mounting connection
- Spectrum Saddle Mount mounts on any pipe material (PVC, ABS, CPVC, SS, etc.)
- Available in 4, 6, 8-inch and 110 and 160-mm pipe sizes

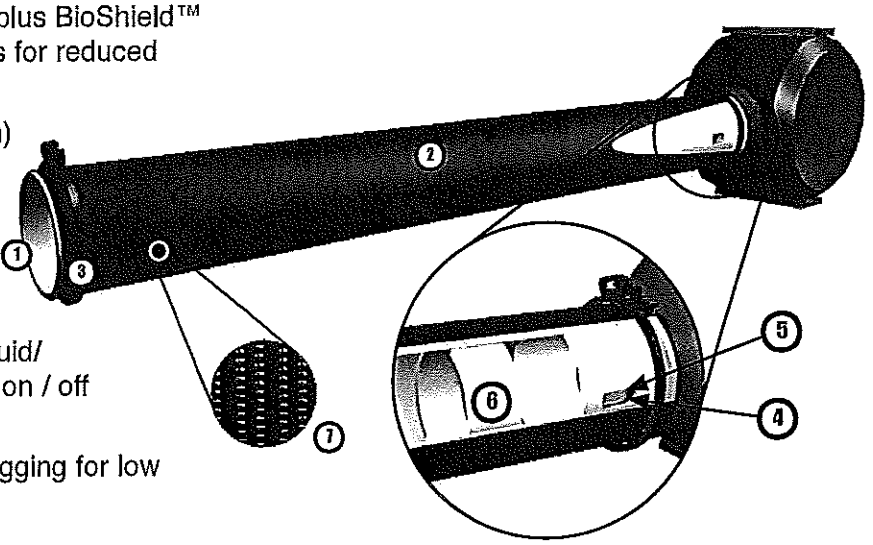

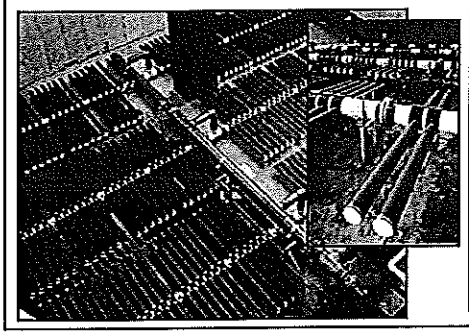

1. **Membrane Support Tube**
2. **Flexible Membrane Media featuring Top-Half Only Perforation**
3. **Reuseable, Non-Metallic Membrane Retainer Clamps Standard** ***(Stainless Steel Clamp Optional)***
4. **Check Valve Feature with non-Perforated Membrane Area**
5. **Air Distribution Orifices**
6. **Internal End Plug**
7. **Die Cut Perforations**

PRODUCT SPECIFICATION SHEET

EDI FLEXAIR® MiniPanel™ diffuser is a unique fine pore, flexible membrane diffuser that provides superior operational flexibility and oxygen transfer efficiency compared to other membrane or rigid fine pore (ceramic) diffusers.

The MiniPanel diffuser features an exclusive top-half only perforation design. This design produces optimum oxygen transfer efficiency performance. A full 366 in² (0.236 m²) of perforated area is provided with a single MiniPanel diffuser (732 in² [0.472 m²] per diffuser assembly). The geometry of the diffuser support high diffuser density applications over 65% floor coverage when the highest oxygen transfer efficiency is desired.

Unique to the FLEXAIR product is the ability to configure the diffuser for the objectives of the application. The MiniPanel diffuser may be configured with a standard, micro pore, or nano pore membrane for optimized OTE and operating pressure performance. All FLEXAIR diffusers are configured with premium quality membranes that are engineered by the Membrane Technologies division at EDI. Alternate membrane materials and perforation patterns are available for non-standard industrial or municipal applications.

An integral triple check valve feature prevents the backflow of liquid into the diffuser and piping. The FLEXAIR MiniPanel diffuser is ideally suited for on/off applications and requires minimal maintenance for long-term performance.

The FLEXAIR MiniPanel diffuser is constructed of PVC or ABS for maximum chemical resistance and mechanical durability. ABS construction is recommended for high temperature applications or where cold temperature durability is required.

The FLEXAIR MiniPanel diffuser is exclusively available with the Spectrum Saddle Mount for maximum mechanical durability and ease of installation and maintenance. Unique to the Spectrum Saddle Mount is the ability to relocate or add diffusers to match process demands. This feature allows the aeration system to be reconfigured to match the specific oxygen demand or air handling requirements of the process. This is particularly beneficial in BNR applications were tight dissolved oxygen control is paramount. System expansions are also easily accommodated with this feature.

For additional information on the FLEXAIR MiniPanel diffuser or other EDI products, contact EDI, visit our website at www.wastewater.com or contact a local EDI representative.

This equipment and systems are covered by US and International Patents 5587114, 6543753, 5846412, 4960546, 6497402, 5788847, 7044453, 5133876, 6770200, 7041219, 5032325, 2028914, 02820115.9, 02773737.8, 05103593.0 and Patents Pending.

Trademarks belong to Environmental Dynamics Inc and their respective trademark owners and may not be used without written permission.

Diffuser Length 110.3" to 117" (2802mm to 2970mm)

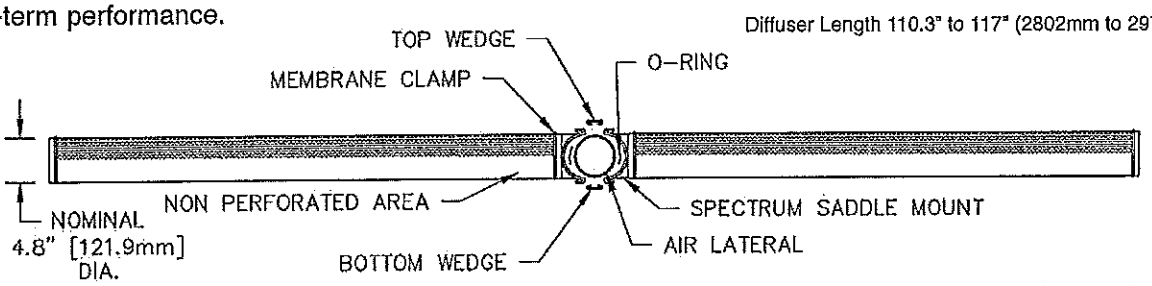

Duplex Dry Weight = 32 lbs
Duplex Operational Weight = 2.8 lbs

A. Active Perforated Area= 732 in² (0.472m²)
B. Length Controlled by Pipe Size

Model*	Typical Airflow Continuous**	Typical Airflow Membrane DWP**
Standard	0-20 scfm (0-32 Nm^3/hr)	6.7-17.8 in H_2O (1.7-4.4 kPa)
Micropore	0-10 scfm (0-16 Nm^3/hr)	7.8-19.2 in H_2O (1.9-4.8 kPa)
Nanopore	0-5 scfm (0-8 Nm^3/hr)	20.4-27.5 in H_2O (5.1-6.8 kPa)

* For Standard Oxygen Transfer Data, Please refer to the SOTE Spec Sheet
** Typical values shown; Special membranes & unit designs available

Environmental Dynamics Inc.
5601 Paris Road Columbia, MO 65202
USA 573-474-9456

For Parts Information:
parts@wastewater.com
www.diffuserexpress.com

For System Information:
systems@wastewater.com
www.wastewater.com

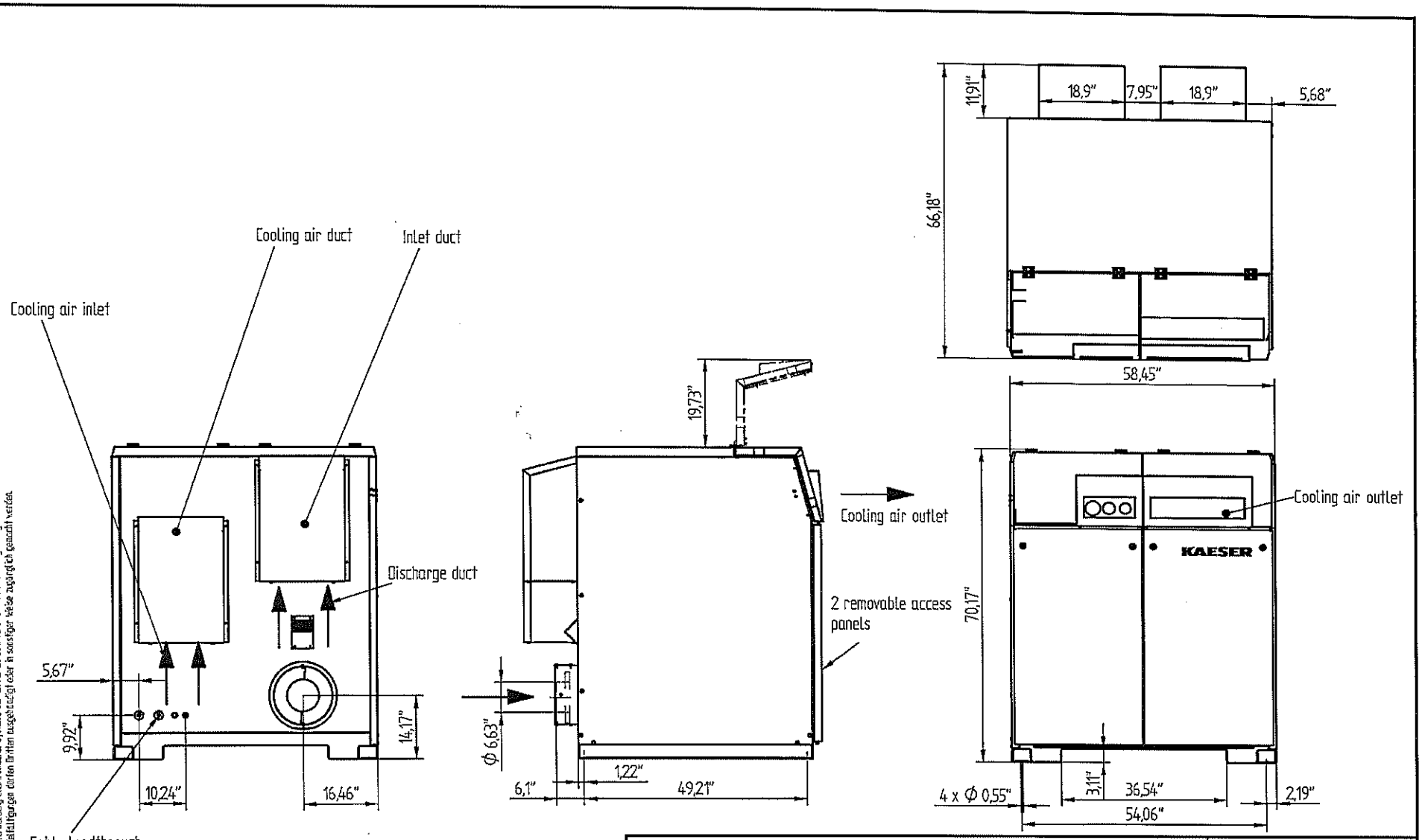

EB 290/420 C pr

Stand:	Datum:	Name:	CAD-Datei:
21.06.02	21.02.02	Lummer	MB001604.dft

KAESER KOMPRESSOREN
— Werk Gera —

Die Zeichnung bleibt unser ausschließliches Eigentum. Sie wird nur zu dem vereinbarten Zweck verwendet und darf Ihr zu keinem anderen Zweck verwendet werden. Kopien oder sonstige Vervielfältigungen ebenfalls Gleich Speicherung, Verarbeitung oder Verbreitung unter Verwendung elektronischer Systeme dürfen nur zu dem vereinbarten Zweck angefertigt werden. Weder Original noch Vervielfältigungen dürfen Dritten ausgehändigt oder in sonstiger Weise zugänglich gemacht werden.

Änderungsbedingte Änderungen vorbehalten. Zeichnung darf nur über CAD geändert werden.

TECHNICAL PROPOSAL	OMEGA PLUS	More air flow With less energy	KAESER OMEGA BLOWERS

Project Reference: Membrane Zone Blower Prepared By: SCH
Location: UV Building Date: 12/08/10
Customer: 319-139

KAESER

Com-paK Plus EB 420C / 53P

Rotary Blower Package

Gauge pressure application

For an oil-free conveying medium

Available with CE Manufacturer's Declaration within the meaning of Machinery Directive 98/37 EG, a. II B

Gas handled		Dry Air
Effective inlet air flow Q_1 at design point	890	icfm
Inlet flow at standard conditions: Standard conditions 14.7 psia, 68 °F and 36% RH	890	scfm
Blower speed at design conditions:	2820	rpm
Design conditions:		
Inlet pressure (absolute)	14.7	psia
Inlet temperature	68	°F
Pressure difference	8.9	psig
Discharge pressure (absolute)	23.6	psia
Discharge temperature	174	°F
Blower shaft power	44.4	bhp
Motor rated power	50.0	hp
Motor enclosure	TEFC	
Motor voltage / frequency	460V/ 60Hz	
Type of cooling	Air cooled	
Connection size	6"	
Volumetric efficiency	0.85	
	with enclosure	
Estimated noise level to DIN EN ISO 2151, figures ± 3 dB(A) with sound insulated piping	71	dB(A)
Dimension (L x W x H) inches	61 x 58 x 70	
Estimated Weight	ca. 2440	lbs

V 7.2 AD VERSION 24/01/06 T1

Kaeser Compressors, Inc.
P.O. Box 946
Fredericksburg, VA 22408
Tel.: (540) 898-5500 Fax.: -5520

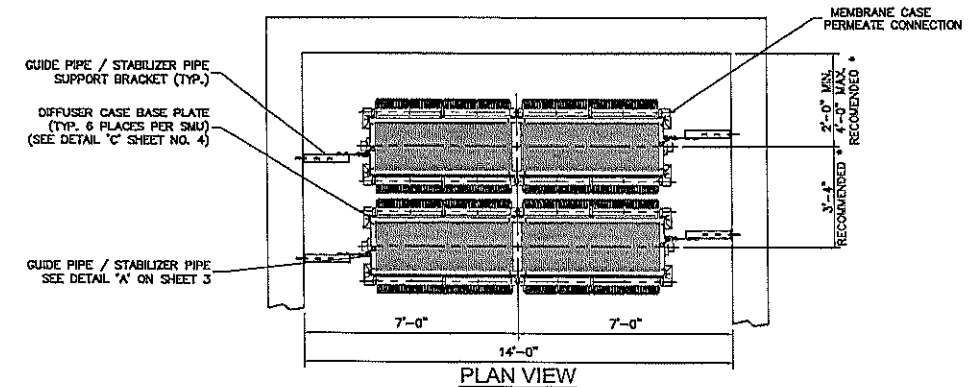

PLAN VIEW

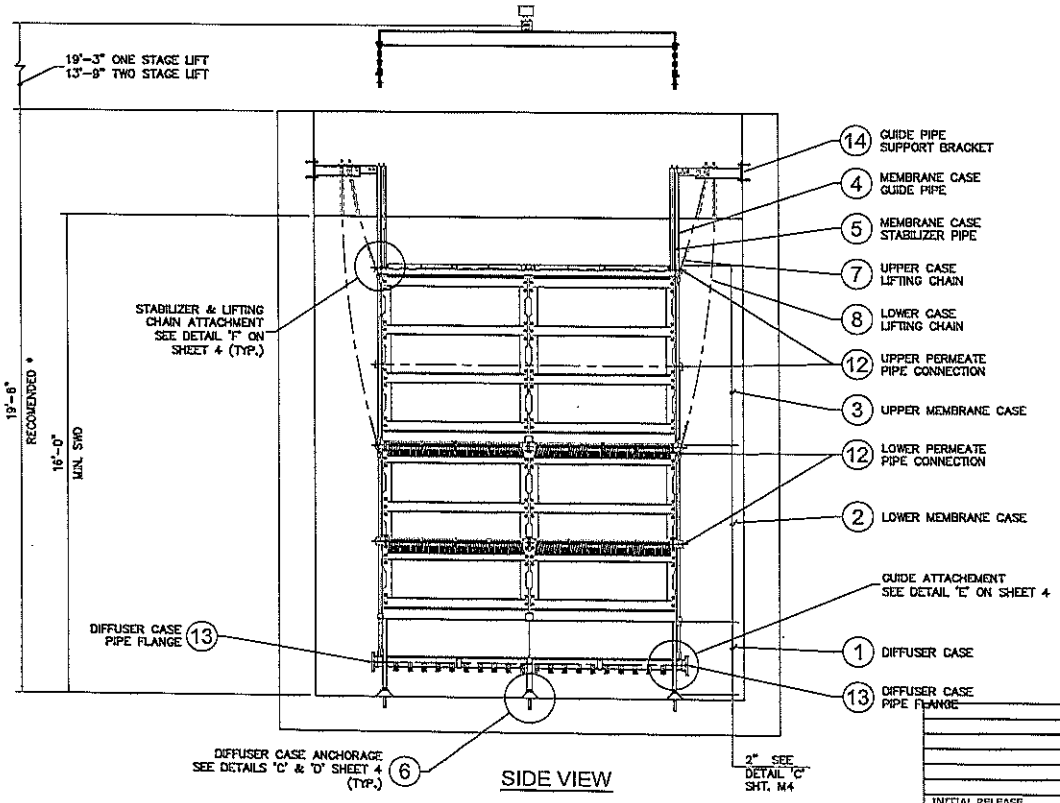

SIDE VIEW

NOTES:

1. RECOMMENDED DIMENSIONS ARE GENERAL RECOMENDATIONS ONLY. FOR PROJECT SPECIFIC DIMENTIONS SEE PROJECT PLAN AND RELATED DRAWINGS.

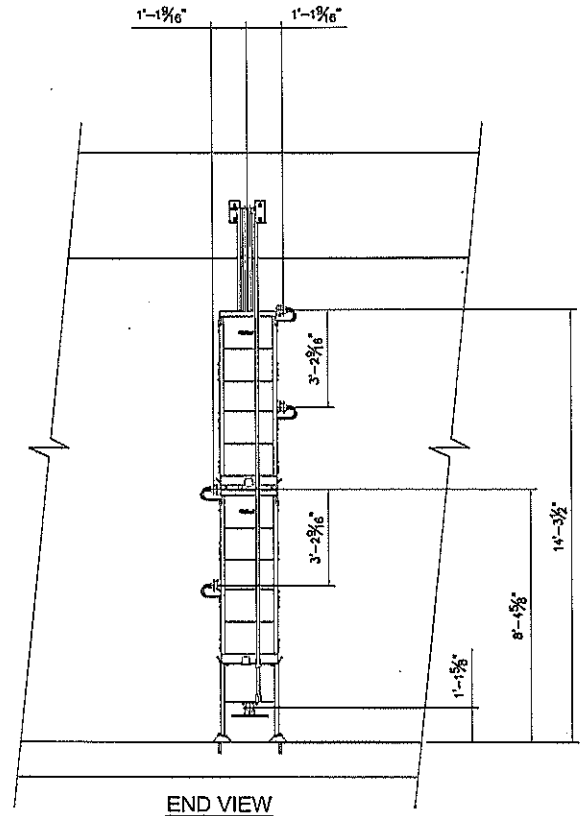

END VIEW

REVISION	EN	BY	CHECKD	DATE
INITIAL RELEASE				

Enviroquip
a division of Rimco Water Technologies

A KUBOTA COMPANY

B

DATE 1/22/09
DRAWN
CHECKD JRT

KUBOTA
INSTALLATION DETAILS FOR
RW-400 SUBMERGED MEMBRANE UNIT (SMU)

DRAWING SCALE NONE
JOB NUMBER -
SHEET M2 OF M4
FILE NAME RW-400
REV A

2

Pump Data Sheet - Gorman-Rupp IND 60Hz

Company: CABE Associates Inc
Name: SCH
Date: 12/8/2010

319-139
Permeate Pump

GORMAN-RUPP PUMPS

Pump:

Size: 84B-B-1

Type: 80-SERIES
Synch speed: Adjustable

Speed: 1290 rpm
Dia: 8.25 in

Curve: 84B-B-1

Impeller: 8882A

Specific Speeds:

Ns: ---
Nss: ---

Dimensions:

Suction: 4 in
Discharge: 4 in

Pump Limits:

Temperature: ---
Pressure: ---
Sphere size: 1.25 in

Power: ---
Eye area: ---

Search Criteria:

Flow: 335 US gpm

Head: 25 ft

Fluid:

Water
SG: 1
Viscosity: 1.105 cP

Temperature: 60 °F
Vapor pressure: 0.2563 psi a
Atm pressure: 14.7 psi a

NPSHa: ---

Motor:

Standard: NEMA
Enclosure: TEFC

Speed: ---
Frame: ---

Sizing criteria: Max Power on Design Curve

--- Data Point ---

Flow:	335 US gpm
Head:	25.1 ft
Eff:	64%
Power:	3.29 hp
NPSHr:	7.72 ft

--- Design Curve ---

Shutoff head:	34.6 ft
Shutoff dP:	15 psi
Min flow:	---

BEP: 65% @ 311 US gpm

NOL power:
3.53 hp @ 432 US gpm

-- Max Curve --

Max power:
20.1 hp @ 728 US gpm

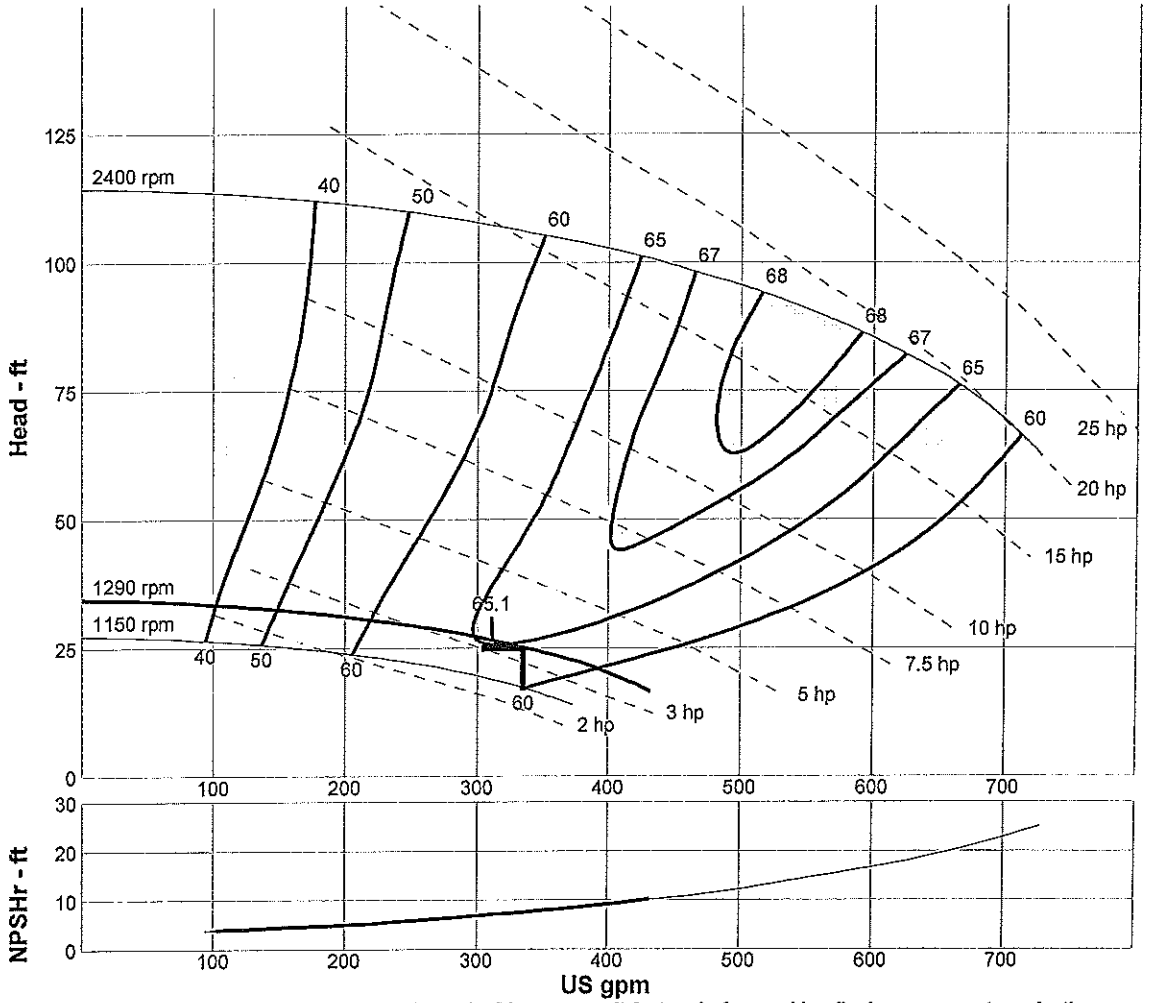

This curve is provided for preliminary selection only. Please consult factory before making final pump or motor selections.

Performance Evaluation:

Flow US gpm	Speed rpm	Head ft	Efficiency %	Power hp	NPSHr ft
402	1290	19.9	58	3.49	9.34
335	1290	25.1	64	3.29	7.72
268	1290	28.6	63	3.03	6.34
201	1290	31.1	57	2.72	5.15
134	1290	32.9	47	2.35	4.39

Selected from catalog: Gorman-Rupp Industrial Pumps.60 Vers: 4.62

14

FLYGT	PERFORMANCE CURVE	PRODUCT NP3153.180	TYPE LT
DATE 2010-12-08	PROJECT RAS	CURVE NO 63-622-00-7520	ISSUE 6

	1/1-LOAD	3/4-LOAD	1/2-LOAD
POWER FACTOR	0.73	0.67	0.55
EFFICIENCY	87.0 %	88.0 %	87.5 %
MOTOR DATA	---	---	---

RATED POWER	15	hp
STARTING CURRENT ...	101	A
RATED CURRENT ...	22	A
RATED SPEED	1155	rpm
TOT.MOM.OF INERTIA ...	0.14	kgm2
NO. OF BLADES	3	

COMMENTS

INLET/OUTLET -/ 10 inch

IMP. THROUGHLET ---

IMPELLER DIAMETER 237 mm

MOTOR #	STATOR	REV
21-18-6AA	05YSER	11

FREQ.	PHASES	VOLTAGE	POLES
60 Hz	3	460 V	6

GEARTYPE	RATIO
---	---

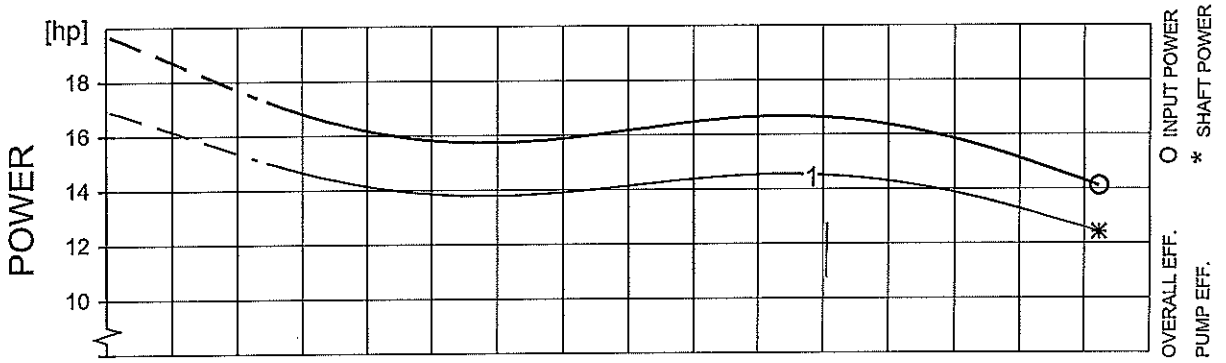

DUTY-POINT	FLOW[USgpm]	HEAD[ft]	POWER [hp]	EFF. [%]	NPSHre[ft]
1	2765	15.9	16.6 (14.5)	67.1 (76.9)	25.6
B.E.P.	2704	16.3	16.7 (14.6)	67.1 (76.9)	25.8

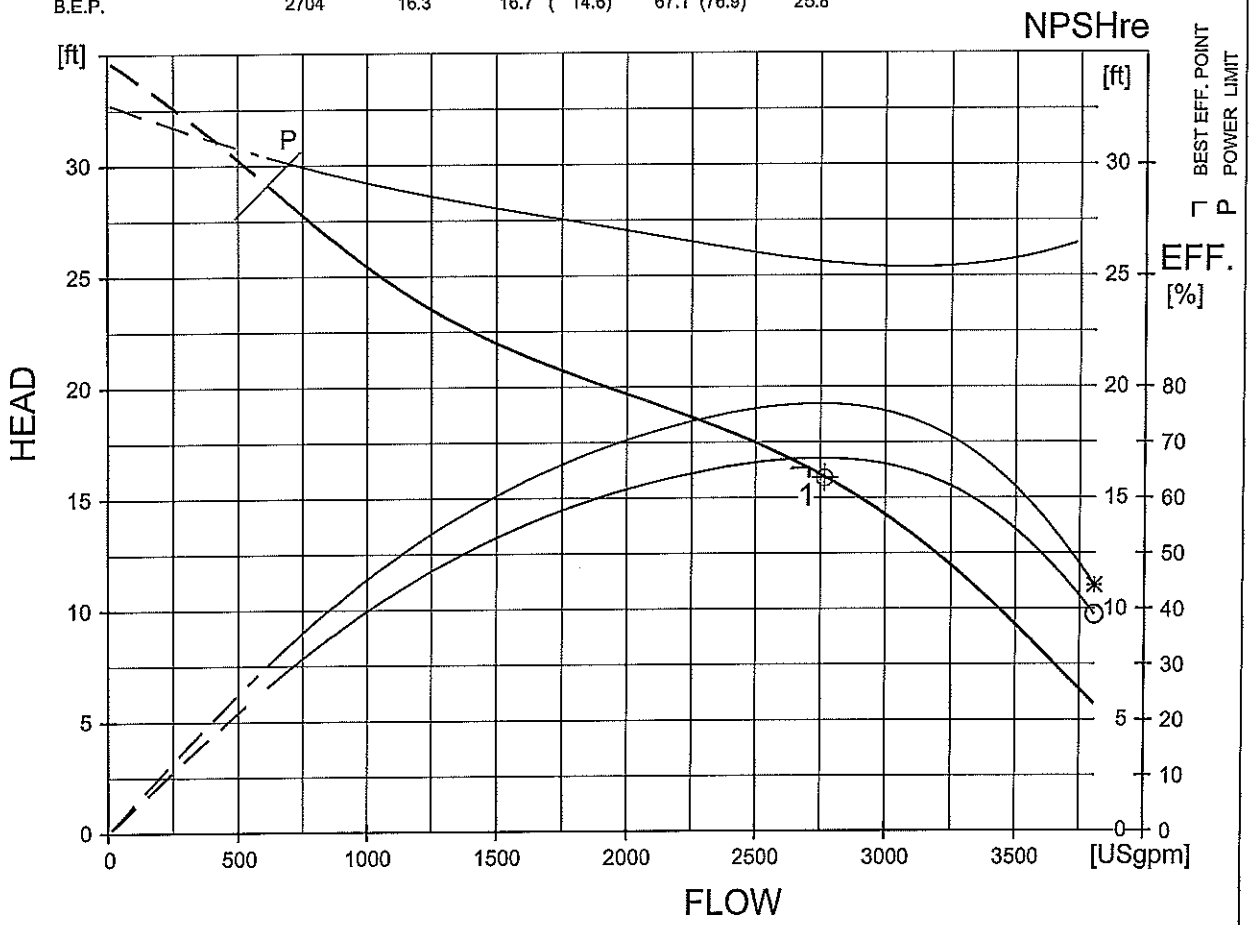

FLYPS2.19.7.0 (20040913)

NPSHre = NPSH3% + min. operational margin

Performance with clear water and ambient temp 40 °C

FLYGT CURVE

15

PERFORMANCE CURVE

PRODUCT	TYPE
CP3057.181	HT

DATE	PROJECT	CURVE NO	ISSUE
2010-12-08	319-139 WAS	63-254-00-5160	2

	1/1-LOAD	3/4-LOAD	1/2-LOAD
POWER FACTOR	0.89	0.84	0.75
EFFICIENCY	77.5 %	80.5 %	81.0 %
MOTOR DATA	---	---	---

RATED POWER	2.7	hp
STARTING CURRENT ...	19	A
RATED CURRENT ...	3.6	A
RATED SPEED	3290	rpm
TOT.MOM.OF INERTIA ...	---	
NO. OF BLADES	1	

IMPELLER DIAMETER: 101 mm

MOTOR #	STATOR	REV
13-08-2BB	01Y	10

FREQ.	PHASES	VOLTAGE	POLES
60 Hz	3	460 V	2

GEARTYPE	RATIO
---	---

COMMENTS: NEVACLOG

INLET/OUTLET: -/ 2 inch

IMP. THROUGHLET: 1.9 inch

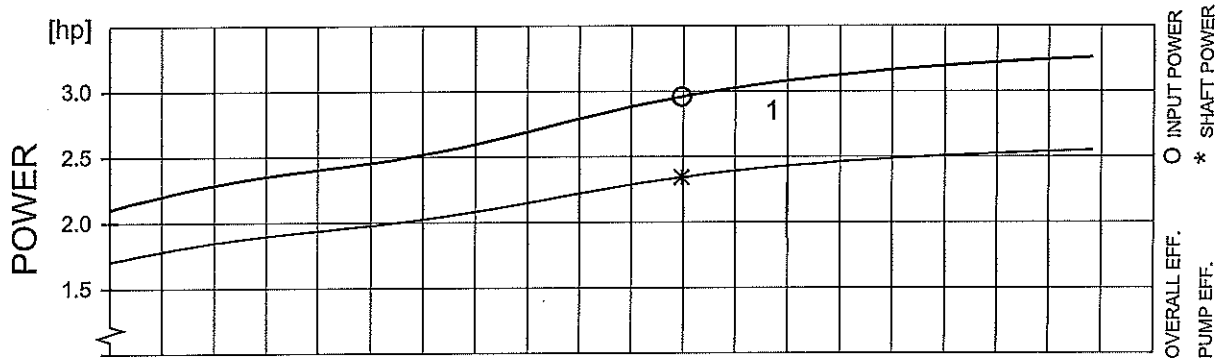

DUTY-POINT	FLOW[USgpm]	HEAD[ft]	POWER [hp]	EFF. [%]	NPSHre[ft]
1	130	25.5	3.08 (2.44)	27.3 (34.5)	
B.E.P.	110	30.4	2.96 (2.35)	28.5 (36.0)	

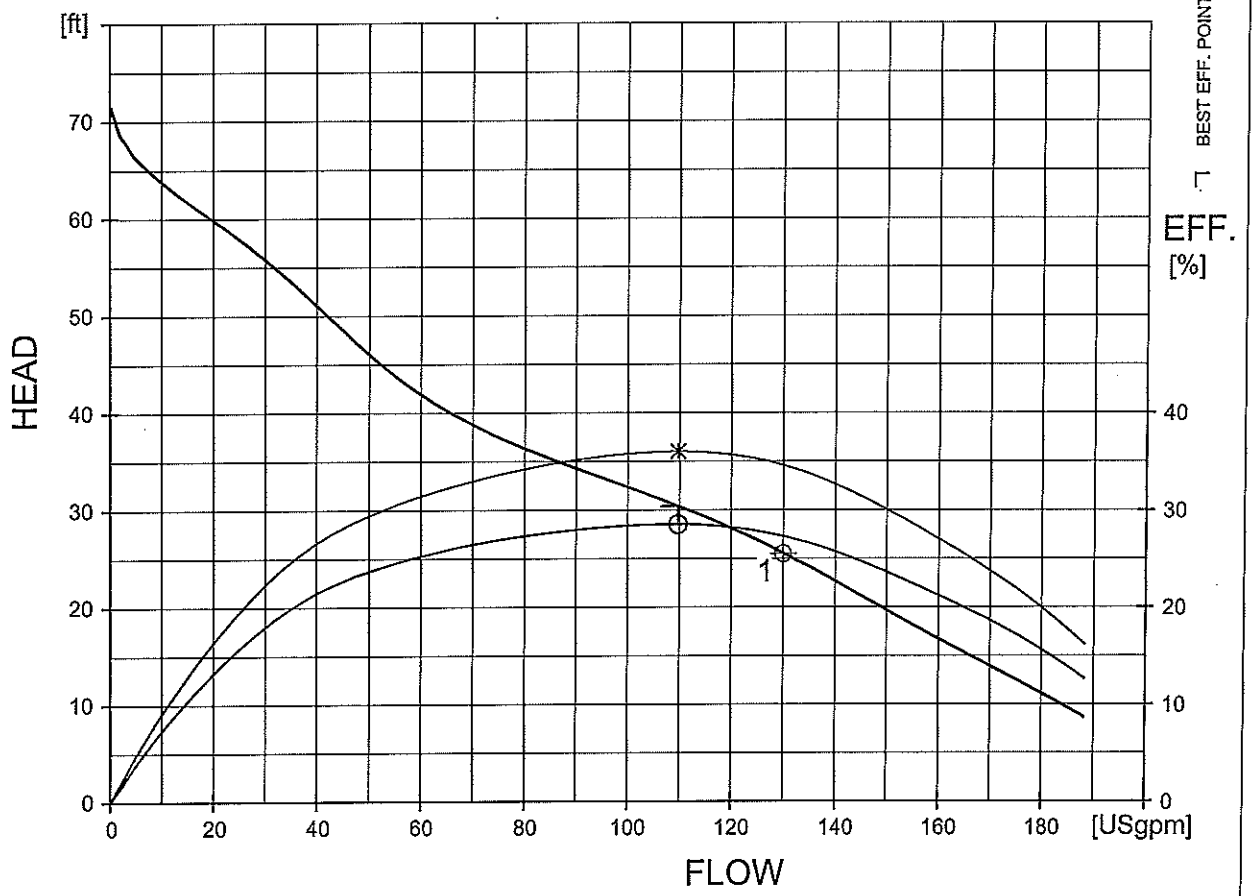

FLYPS2.19.7.0 (20040913)

Performance with clear water and ambient temp 40 °C

FLYGT CURVE

TROJAN UV
WATER CONFIDENCE™

3020 Gore Road
London, Ontario N5V 4T7
1-888-220-6118
Tel: (519) 457-3400 / Fax: (519) 457-3030
www.trojanuv.com

Trojan System UV3000™PTP
Municipal Wastewater Disinfection Equipment

Project Name: Wannendale WWTP

Quote Number:

Date: January 21, 2010

Prepared For:	**Scott Hoffman**	**Phone:**	
Company:	**CABE Associates**	**Fax:**	
		Email:	

UV SYSTEM DESIGN PARAMETERS		**GUARANTEED PERFORMANCE**	
Peak Design Flow	1.68 MGD	Validated UV Dose	> 30,000 uWs/cm^2
UV Transmittance	65 %, minimum	Disinfection Limit	< 200 FC/100 ml, based on 30 day geometric mean
TSS Concentration	30 mg/l, 30-day average		

EQUIPMENT DETAILS **Two (2) Trojan model D3300K**

- Four (4) complete UV systems supplied with Type 304 Stainless Steel Channel, Module Support Rack, Level Control Weir, Transition Boxes, Monitoring System, Spare Parts Package, Operators Kit and Maintenance Rack. Two banks per channel, two channels in parallel.
- 6 Type 316 Stainless Steel Modules per bank supplied, containing 2 UV lamps each – Total of 48 UV lamps
- Each UV module weighs 30 pounds and is easily handled by one person
- Each UV module has a standard 120V plug and 10 foot weatherproof cable for connection to GFI receptacle
- 6 Outdoor-rated GFI Power Distribution Receptacles supplied (one for 2 modules)
- Each lamp consumes 87.5 Watts – Total system power requirement of 4200 Watts 38.04 amps
- Lamp on/off status indicated on each UV module using LED indicators
- Monitoring System provided for local indication of UV intensity, lamp age and alarms
- Remote indication of UV intensity and low UV intensity alarm available
- Monitoring System requires 120V, single phase, 2 wire plus ground, 5 amp power supply
- Please refer to the enclosed drawings and specifications for full design details and requirements

COMMERCIAL DETAILS

- Comprehensive Lamp Warranty: Full replacement (non pro-rated) up to 12,000 hours
- System Warranty: 12 months after start-up or 18 months after shipment, whichever occurs first
- 3 Copies of Shop Drawings and O&M Manuals will be supplied
- Equipment Delivered 3-5 weeks after release for fabrication (approved shop drawings)
- Prices do not include any duties or taxes that may be applicable
- Prices are FOB factory, freight paid to jobsite
- Start-up and Training provided by Trojan-certified local service provider

SELLING PRICE **$**

Please contact me if you have any questions about this design. I look forward to working with you on this project.

Rep Name:	Jeff Mancini	Phone:	302-659-4016
Rep Company:	Kappe Associates	Fax:	302-659-4023
Email:	jmancini@kappe-inc.com		

Additional Information:

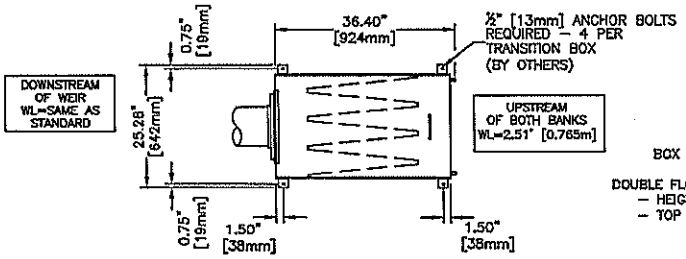

D3400K WEIR BOX (OPTION)
(REPLACES DOWNSTREAM TRANSITION BOX AND WEIR IN CHANNEL AS SHOWN BELOW)

DOUBLE FLOW WEIR BOX FRONT AND END VIEW NOT SHOWN
– HEIGHT OF WEIR BOX TO MATCH TRANSITION BOX
– TOP OF WEIR ELEVATION WILL NOT CHANGE FROM STANDARD FRONT VIEW

TROJAN UV3000™ PTP
EQUIPMENT INTERCONNECTIONS

No.	DESCRIPTION	FROM	TO
1	SPLITTER PANEL POWER SUPPLY - 120V, 1 PHASE, 2 WIRE, ACTUAL DRAW 12.7 AMPS / SPLITTER PANEL	DISTRIBUTION PANEL (DP) (NOT SHOWN) (BY OTHERS)	SPLITTER PANEL (BY OTHERS)
2	POWER DISTRIBUTION RECEPTACLE (PDR) POWER SUPPLY 120V, 1 PHASE, 2 WIRE, ACTUAL DRAW 6.3 AMPS / PDR	SPLITTER PANEL (BY OTHERS)	PDR
3	SYSTEM MONITOR POWER SUPPLY 120V, 1 PHASE, 2 WIRE, 5 AMPS	DP (NOT SHOWN) (BY OTHERS)	SYSTEM MONITOR

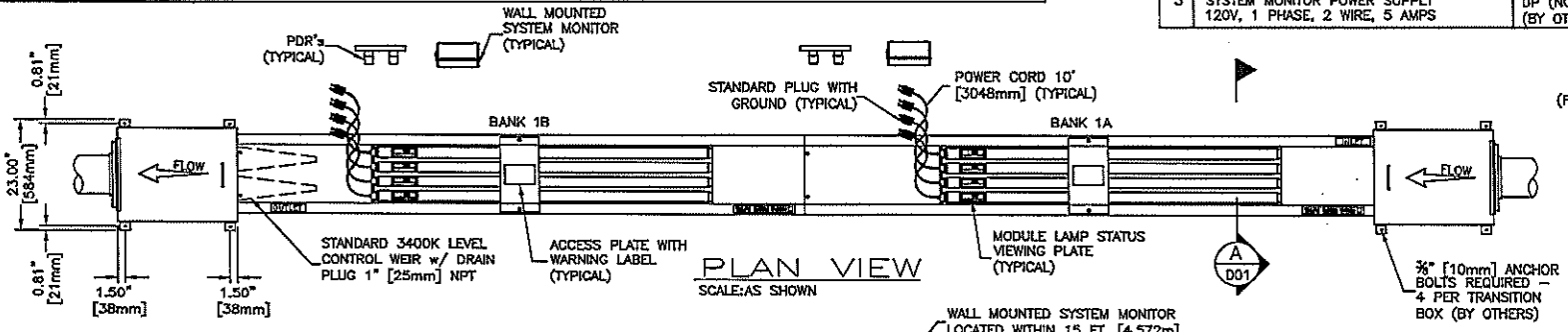

PLAN VIEW
SCALE:AS SHOWN

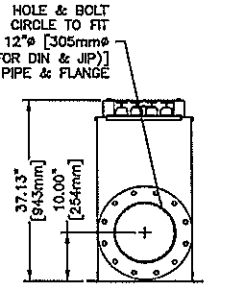

END VIEW (TYPICAL)
SCALE:AS SHOWN

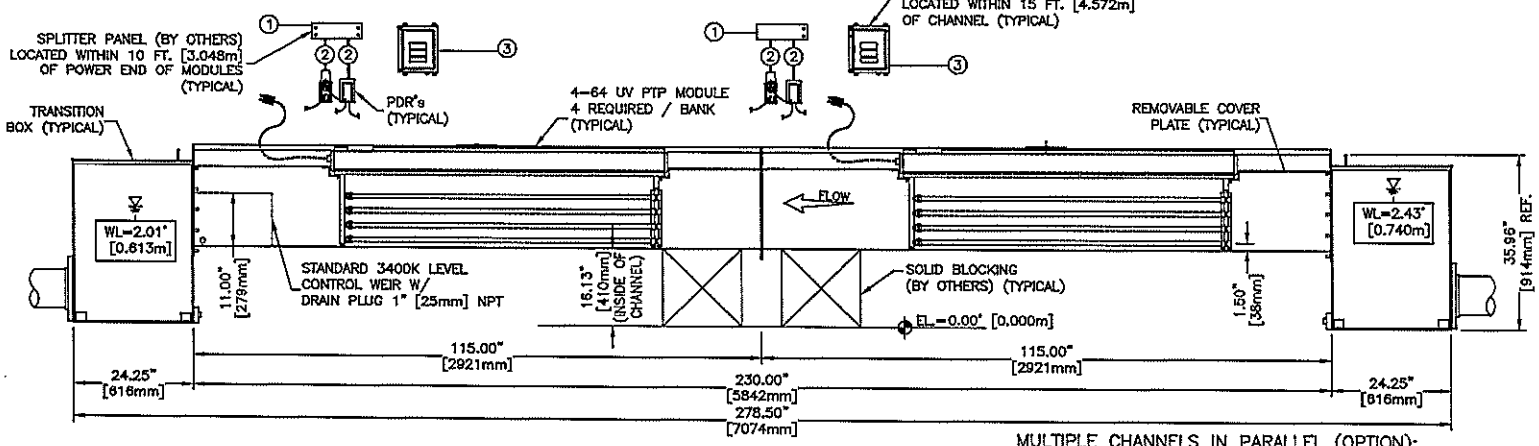

FRONT VIEW
SCALE:AS SHOWN

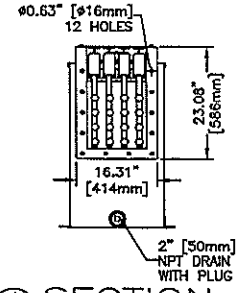

A SECTION
D01 SCALE:AS SHOWN

NOTES:
: DO NOT SLOPE CHANNEL FLOOR.
: CHANNEL WIDTH & DEPTH MUST BE KEPT WITHIN A TOLERANCE OF + OR – ¼" [6mm].
: ANCHOR BOLTS ARE NOT SUPPLIED BY TROJAN TECHNOLOGIES INC.
: BOLTS, WASHERS AND NUTS FOR CONNECTION OF CHANNELS AND TRANSITION BOXES TO CHANNELS ARE PROVIDED BY TROJAN TECHNOLOGIES INC.
: SYSTEM CONDUIT, WIRING, DISTRIBUTION PANELS & INTERCONNECTIONS BY OTHERS.
: ELECTRICAL REQUIREMENTS SHOWN ARE TO SUPPLY TROJAN UV EQUIPMENT ONLY. ELECTRICAL INRUSH FACTOR TO BE ADDED AS PER LOCAL CODE.
: ANY EXTRA OUTLETS NOT BEING USED BY TROJAN EQUIPMENT HAVE NOT BEEN INCLUDED IN THE INTERCONNECT AMPERAGE.
: CONTRACTOR TO REVIEW ALL TROJAN TECHNOLOGIES INC. INSTALLATION INSTRUCTIONS PRIOR TO EQUIPMENT INSTALLATION.
: ACCESS IS REQUIRED FOR MODULE REMOVAL – NOTE THE CHANNEL WIDTH AND ENSURE ADEQUATE ACCESS IS PROVIDED TO ALL MODULES.
: DO NOT ENCASE THE STEEL CHANNEL IN CONCRETE.

MULTIPLE CHANNELS IN PARALLEL (OPTION):
: ADDITIONAL UNITS CAN BE INSTALLED PARALLEL TO THE UNIT SHOWN.
: ACCESS BETWEEN EVERY 2 PARALLEL CHANNELS IS REQUIRED FOR MODULE REMOVAL – NOTE THE CHANNEL WIDTH AND ENSURE ADEQUATE ACCESS IS PROVIDED BETWEEN TRANSITION BOXES AND CHANNELS.
: ACCESS BETWEEN A MAXIMUM OF 2 CHANNELS IS NOT REQUIRED FOR MODULE REMOVAL. TRANSITION BOXES CAN BE INSTALLED ADJACENT TO EACH OTHER.

TROJAN UV

CONFIDENTIALITY NOTICE
Copyright©2005 by Trojan Technologies Inc. All rights reserved. No part of this document may be reproduced, stored in a retrieval system, or transmitted in any form, without the written permission of Trojan Technologies Inc.

DESCRIPTION: LAYOUT, UV3000PTP–UV3400K 1 CHANNEL 2 BANK 4 LAMPS WEIR		STANDARD DRAWING NO. 3M0276
DRAWN BY : PJM/CAR/LZ	DATE : 050C31	REFERENCE NO. N/A
CHECKED BY : LQ	DATE : 06MY17	
APPROVED BY : JLM	DATE : 06MY18	DWG NO. D01 / REV. E
SCALE (8½x11) : NOT TO SCALE	LOG NUMBER : N/A	

14M 7000 1180 RPM

ENCLOSED IMPELLER T7FA92

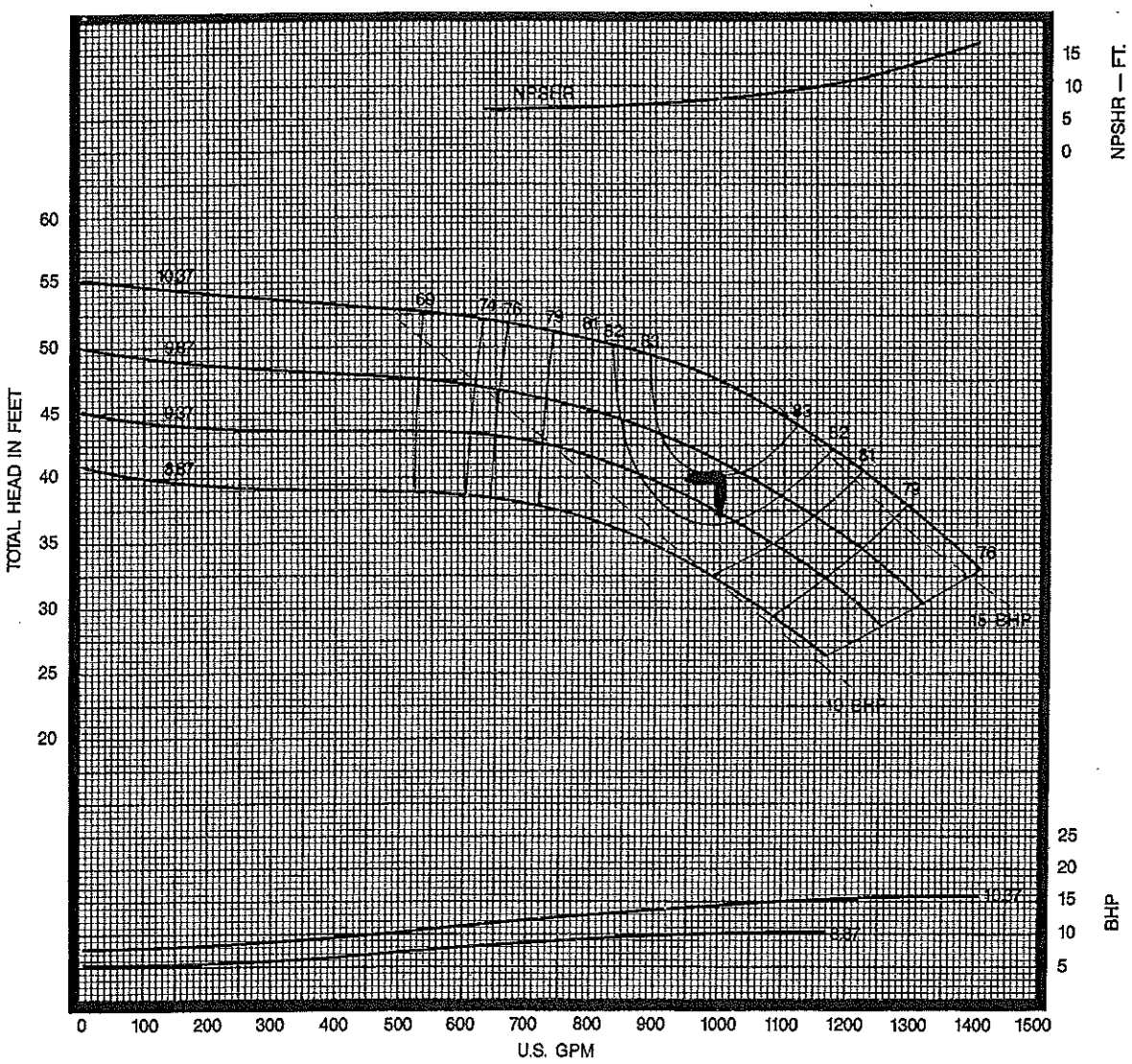

EFFICIENCY CORRECTIONS(1)

NUMBER OF STAGES	EFFICIENCY CHANGE
1	-2.0 POINTS
2	-1.0 POINTS
3	NO CHANGE
4	NO CHANGE
5	NO CHANGE
6 OR MORE	NO CHANGE

BOWL MATERIAL	EFFICIENCY CHANGE
CAST IRON	-2.0 POINTS
ENAMELED C.I.	NO CHANGE

IMPELLER MATERIAL	EFFICIENCY CHANGE
CAST IRON	-1.0 POINTS
BRONZE	NO CHANGE
ENAMELED C.I.	NO CHANGE

(1) Refer to "Application and Reference Data" for head correction.

DIMENSIONS (Inches)

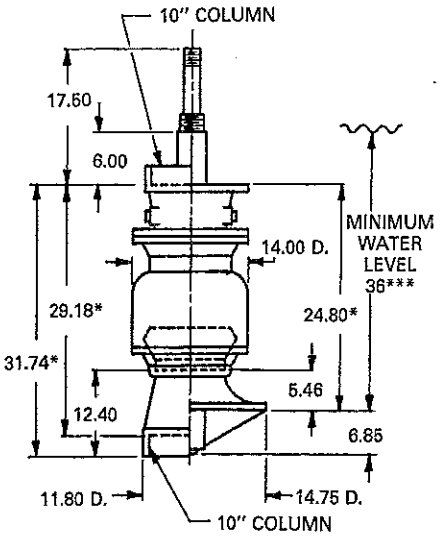

*Add 12.02 for each additional stage

TECHNICAL DATA

DATA	VALUE
MAXIMUM OPERATING SPEED	2000 RPM
MAXIMUM NUMBER OF STAGES	16**
PUMP SHAFT DIAMETER	1 15/16 IN.
IMPELLER EYE AREA	24.80 SQ. IN.
MAXIMUM SPHERE SIZE	1.00 IN.
K_t (THRUST FACTOR)	8.41 LBS./FT.
K_a (ROTOR WT. PER STAGE)	37.50 LBS.
BOWL WT. (FIRST STAGE)	376 LBS.
BOWL WT. (EACH ADD'L. STAGE)	138 LBS.
ALLOWABLE SHAFT STRETCH	.93 IN.**
WK^2 (FIRST STAGE)	3.55 LBS.-FT.^{2}
WK^2 (EACH ADD'L. STAGE)	3.33 LBS.-FT.^{2}
BOWL RING CLEARANCE	.014/.018 IN.

** These are nominal values. Refer to "Application and Reference Data" for information further limiting or extending these values.

*** This value is the minimum submergence required to prevent vortexing only. This value may need to be increased to provide adequate NPSHA.

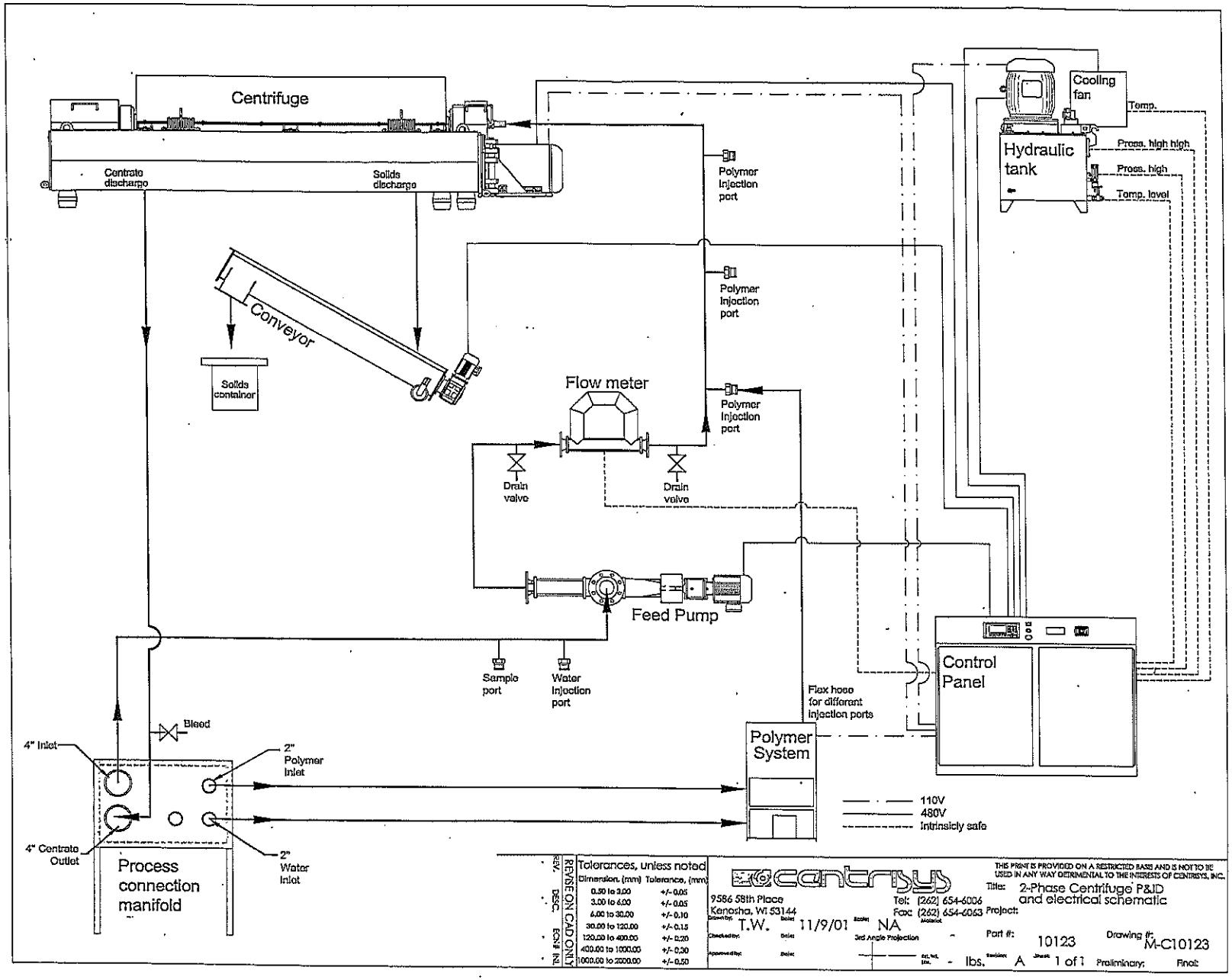
Centrifuge
Centrate discharge
Solids discharge
Conveyor
Solids container
Polymer Injection port
Polymer Injection port
Polymer Injection port
Flow meter
Drain valve
Drain valve
Feed Pump
Sample port
Water Injection port
Cooling fan
Hydraulic tank
Temp.
Press. high high
Press. high
Temp. level
Control Panel
Flex hose for different injection ports
Polymer System
110V
480V
Intrinsicly safe
Bleed
4" Inlet
2" Polymer Inlet
4" Centrate Outlet
2" Water Inlet
Process connection manifold
Tolerances, unless noted
Dimension, (mm) Tolerance, (mm)
0.50 to 3.00 +/- 0.05
3.00 to 6.00 +/- 0.05
6.00 to 30.00 +/- 0.10
30.00 to 120.00 +/- 0.15
120.00 to 400.00 +/- 0.20
400.00 to 1000.00 +/- 0.30
1000.00 to 2000.00 +/- 0.50
REV. DESC. ECN # INI.
REVISE ON CAD ONLY
centrisys
9586 58th Place
Kenosha, WI 53144
Tel: (262) 654-6006
Fax: (262) 654-6063
THIS PRINT IS PROVIDED ON A RESTRICTED BASIS AND IS NOT TO BE USED IN ANY WAY DETRIMENTAL TO THE INTERESTS OF CENTRISYS, INC.
Title: 2-Phase Centrifuge P&ID and electrical schematic
Project:
Drawn by: T.W.
Date: 11/9/01
Scale: NA
3rd Angle Projection
Part #: 10123
Drawing #: M-C10123
Checked by:
Approved by:
Est. Wt. lbs.
Size: A
Sheet: 1 of 1
Preliminary:
Final:

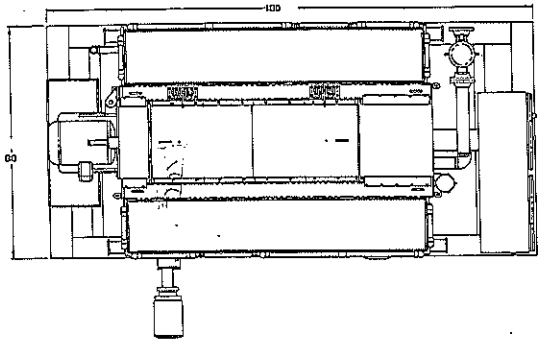

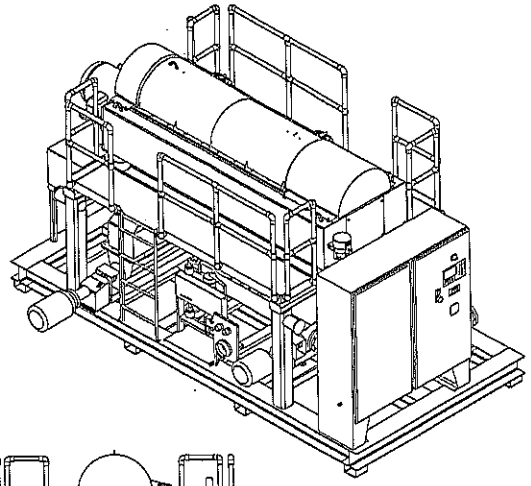

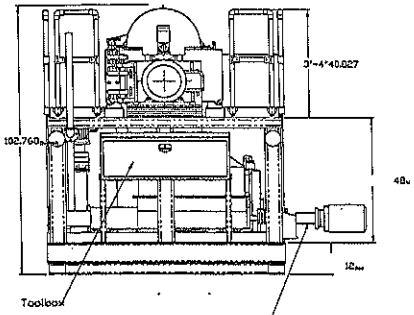

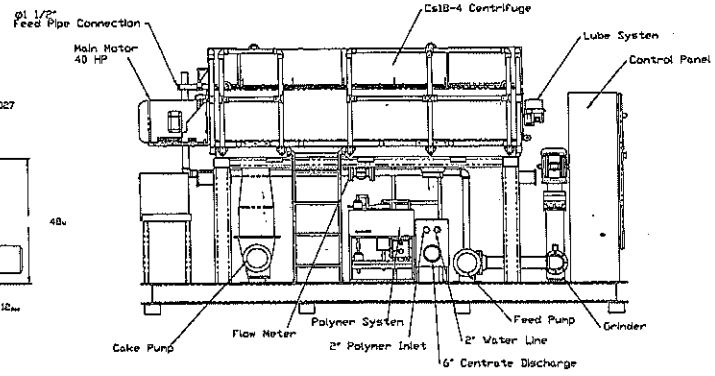

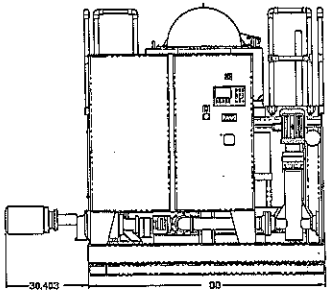

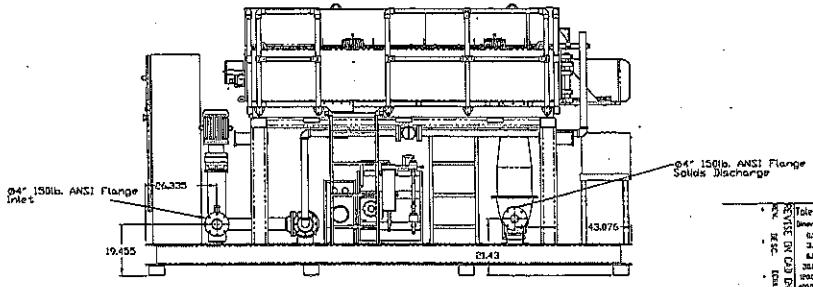

REV.	DESC.	DATE	BY

Tolerances, unless noted	
Dimension, (mm)	Tolerance, (mm)
0.50 to 3.00	+/- 0.05
3.00 to 6.00	+/- 0.05
6.00 to 30.00	+/- 0.10
30.00 to 120.00	+/- 0.15
120.00 to 400.00	+/- 0.20
400.00 to 1000.00	+/- 0.30
1000.00 to 2000.00	+/- 0.50

THIS PRINT IS PROVIDED ON A RESTRICTED BASIS AND IS NOT TO BE USED IN ANY WAY DETRIMENTAL TO THE INTERESTS OF CONTROLS, INC.

9506 58th Place
Kenosha, WI 53144
Tel: (262) 654-6006
Fax: (262) 654-6063

Title: CS18-4 Skid General Arrangement

Project:

Drawn by: L.G. Date: 6/21/02 Scale: 1:20 3rd Angle Projection

Part #: 12884 Drawing #: A-D12884

Sheet 1 of 1 Preliminary Final

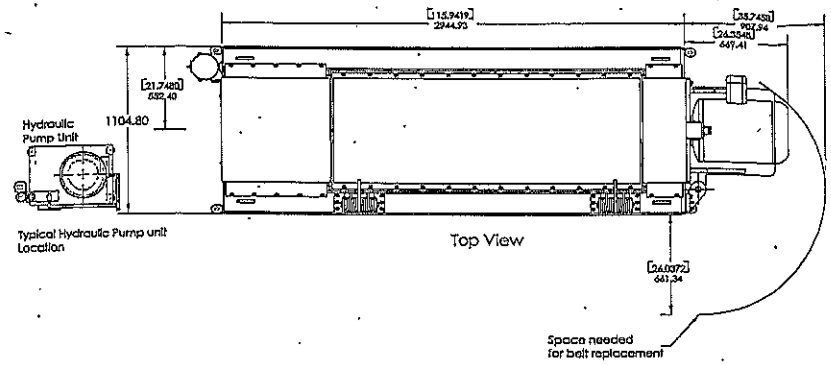

WEIGHTS:

ROTATING ASSEMBLY	2700 LBS. [1225 KG.]
BOWL FILLING WITH DENSITY 1.0	333 LBS. (151 KG.)
COMPLETE CENTRIFUGE (EMPTY)	6000 LBS. [2722 KG.]

STATIC LOAD BELOW EACH CORNER OF COMPLETE CENTRIFUGE

FRONT	REAR
A=1300 LBS. (590 KG.)	C=1700 LBS. (772 KG.)
B=1300 LBS. (590 KG.)	D=1700 LBS. (772 KG.)

DYNAMIC ADDITIONAL LOAD AT THE CORNERS IN PERCENT OF STATIC LOAD

LOCATION	AT OPERATING SPEED	AT PASSING ISOLATOR FREQUENCY
VERTICAL	5%	30%
HORIZONTAL	1%	6%

ISOLATOR RESONANT FREQUENCY 4.7-8.3 Hz (280-500 MIN)

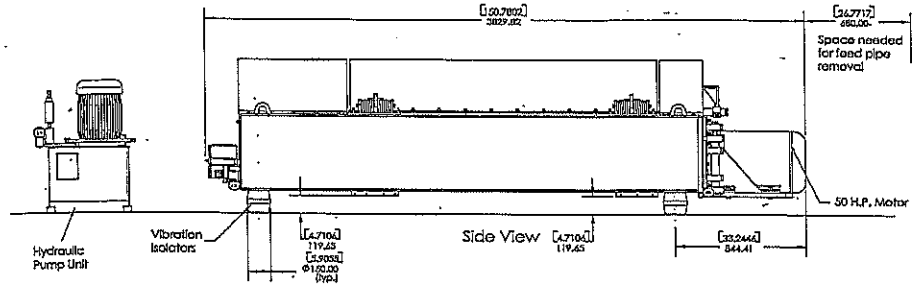

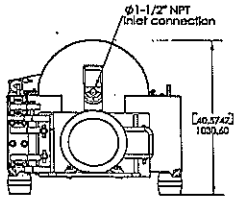

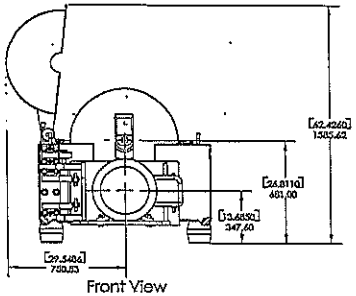

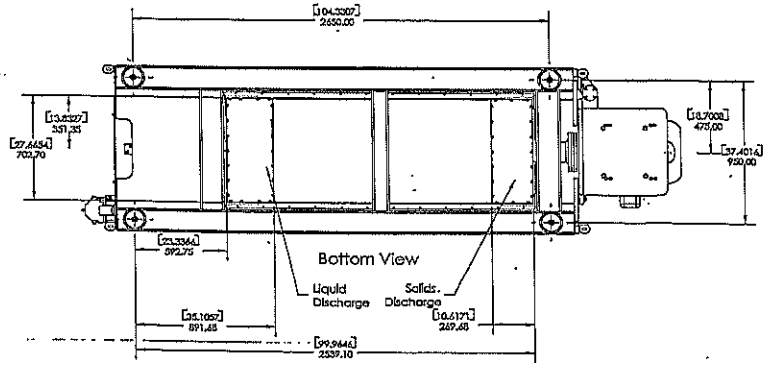

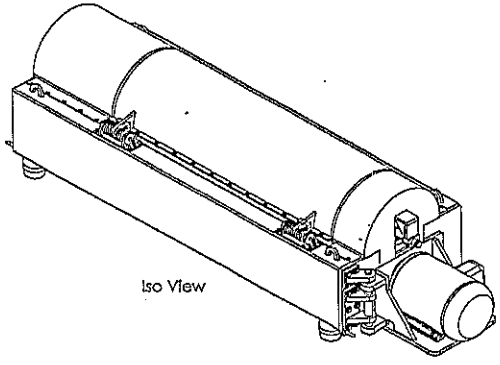

centrisys
9586 58th Place
Kenosha, WI 53144
Tel: (262) 654-6006
Fax: (262) 654-6063

THIS PRINT IS PROVIDED ON A RESTRICTED BASIS AND IS NOT TO BE USED IN ANY WAY DETRIMENTAL TO THE INTERESTS OF CENTRISYS, INC.

Title: General Arrangement for Cs18-4 Centrifuge
Project: Cs18-4 Centrifuge

Drawn by: A.W. Date: 08-14-00 Scale: 1:1
Checked by: Date:
Approved by: Date:
3rd Angle Projection
Material: N/A
Part #: 12037
Drawing #: A-C12037
Wt. lbs.: lbs.
Size: A
Sheet: 1 of 1
Preliminary: Final:

Performance Curve
NEMO®-Pump NM 053*1L

Data based on water at 65°F

NETZSCH

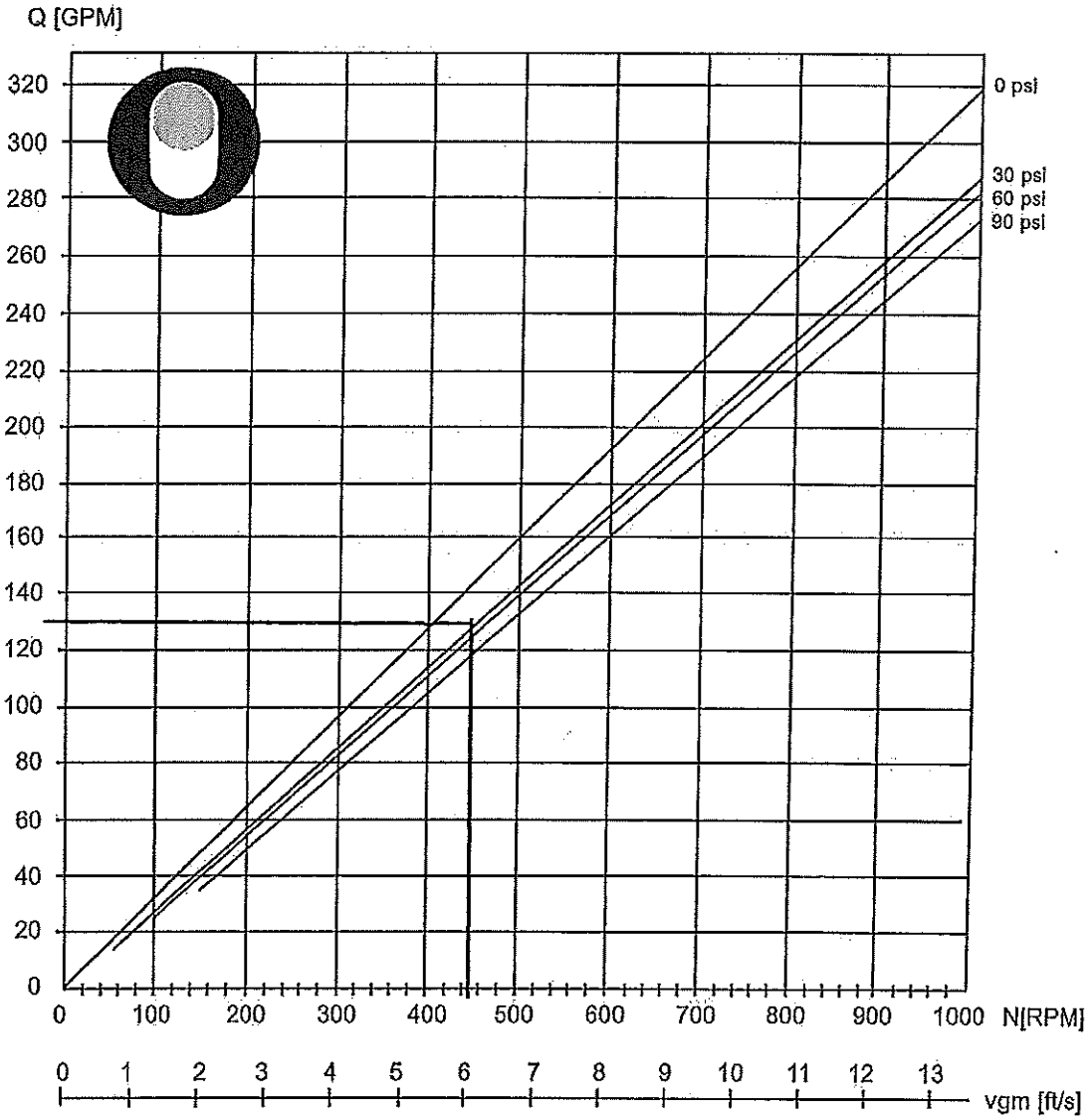

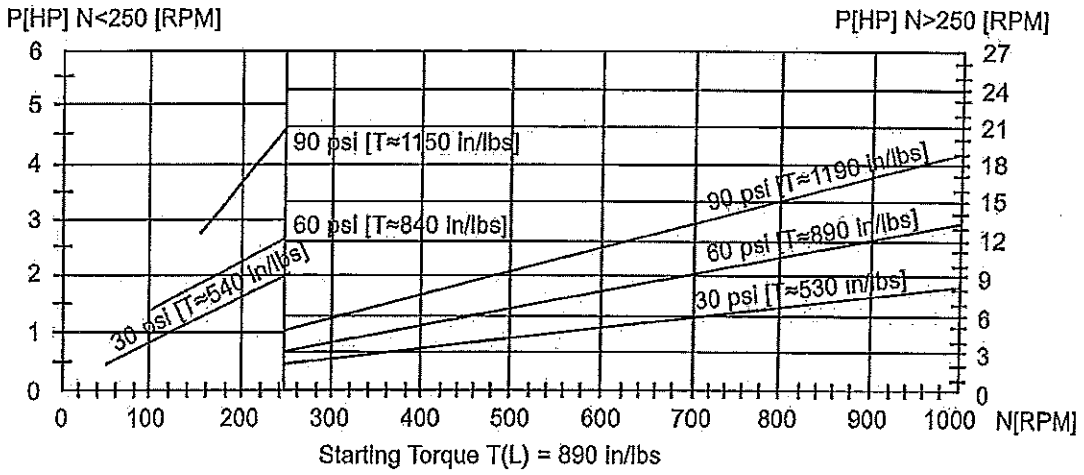

Starting Torque T(L) = 890 in/lbs

Typical Dimensions

This NEMO® Standard Close Coupled Pump Typical Dimensions Chart provides a general outline drawing for each pump. Detailed dimensions are available upon request. Please contact your local NEMO® Pump Representative for additional information.

PUMP		W	L	H	HP
NM003-NM011BY		10.00	35.00	7.59	0.5
NM015BY	01L06 / 02S12	12.00	41.00	9.24	0.5
NM021BY	01L06 / 02S12	12.00	45.00	9.24	1.0
NM031BY	01L06 / 02S12	12.00	52.00	11.68	2.0
NM038BY	01L06 / 02S12	12.00	72.00	13.25	5.0
NM045BY	01L06 / 02S12	12.00	85.00	14.35	7.5
NM053BY	01L06 / 02S12	12.00	92.00	16.13	7.5
NM063BY	01L06 / 02S12	15.00	106.00	19.15	10.0
NM076BY	01L06 / 02S12	18.00	117.00	21.08	20.0
NM090BY	01L06 / 02S12	18.00	135.00	22.45	30.0
NM105BY	01L06 / 02S12	18.00	162.00	25.01	50.0

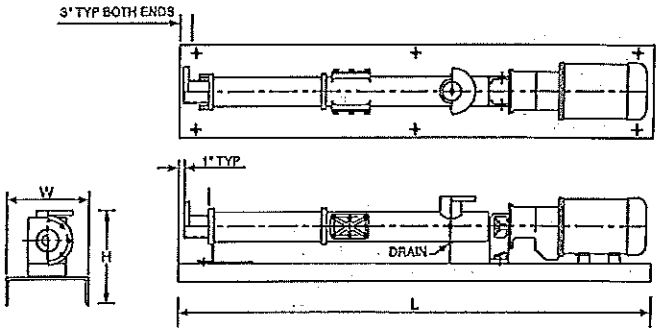

** All dimensions are in inches*
*** All gear motors are supplied with 1750 RPM AC Motors*
**** Open throat dimensions may vary*

General Output Capacities

This General Output Capacity Chart is supplied to estimate pump sizing only. Please contact your local NEMO® Pump Representative with detailed application information to obtain a formal quotation.

Single Stage Pumps	High Abrasion/ High Viscosity (gpm)	Medium Abrasion/ Medium Viscosity (gpm)	Low Abrasion/ Low Viscosity (gpm)	Max. Pressure (psi)	Two Stage Pumps	High Abrasion/ High Viscosity (gpm)	Medium Abrasion/ Medium Viscosity (gpm)	Low Abrasion/ Low Viscosity (gpm)	Max. Pressure (psi)
NM003-NM011BY - See Performance Curves					NM003-NM011BY - See Performance Curves				
NM015BY01L06	0.4	1.5	2.5	90	NM015BY02S12	0.25	0.75	1.25	175
NM021BY01L06	1.2	4.2	7.0	90	NM021BY02S12	0.7	2.1	3.5	175
NM031BY01L06	4.0	12.0	20.0	90	NM031BY02S12	2.0	6.0	10.0	175
NM038BY01L06	11.0	33.0	55.0	90	NM038BY02S12	5.5	16.5	27.5	175
NM045BY01L06	18.0	54.0	90.0	90	NM045BY02S12	9.0	27.0	45.0	175
NM053BY01L06	32.0	96.0	160.0	90	NM053BY02S12	16.0	48.0	80.0	175
NM063BY01L06	54.0	162.0	270.0	90	NM063BY02S12	27.0	81.0	135.0	175
NM076BY01L06	90.0	270.0	450.0	90	NM076BY02S12	45.0	135.0	225.0	175
NM090BY01L06	154.0	462.0	770.0	90	NM090BY02S12	77.0	231.0	385.0	175
NM105BY01L06	230.0	580.0	1000.0	90	NM105BY02S12	115.0	290.0	500.0	175

** Installation Autocad drawings are available upon request*
*** Standard NEMO® Pumps can be mounted vertically when installation space is limited*

The local Sales Representative in your area is:

NETZSCH Incorporated

NETZSCH Incorporated
NETZSCH Pump Division
119 Pickering Way Exton, PA 19341
Tel: 610-363-8010 Fax: 610-363-0971
E-mail: nemopump@netzschusa.com
www.netzschusa.com

NIL 02 - 12 12/03 5M

NEMO is a registered trademark of NETZSCH Incorporated.
© Copyright 2003 NETZSCH Incorporated. All rights reserved. Printed in the U.S.A.

Die Zeichnung bleibt unser ausschließliches Eigentum. Sie wird nur zu dem vereinbarten Zweck anvertraut und darf zu keinem anderen Zweck verwendet werden. Kopien oder sonstige Vervielfältigungen ebenfalls sowie Speicherung, Verarbeitung oder Verwaltung unter Verwendung elektronischer Systeme dürfen nur zu dem vereinbarten Zweck angefertigt werden. Weder Original noch Vervielfältigungen dürfen Dritten ausgehändigt oder in sonstiger Weise zugänglich gemacht werden.

Entwicklungsbedingte Änderungen vorbehalten. Zeichnung darf nur über CAD geändert werden.

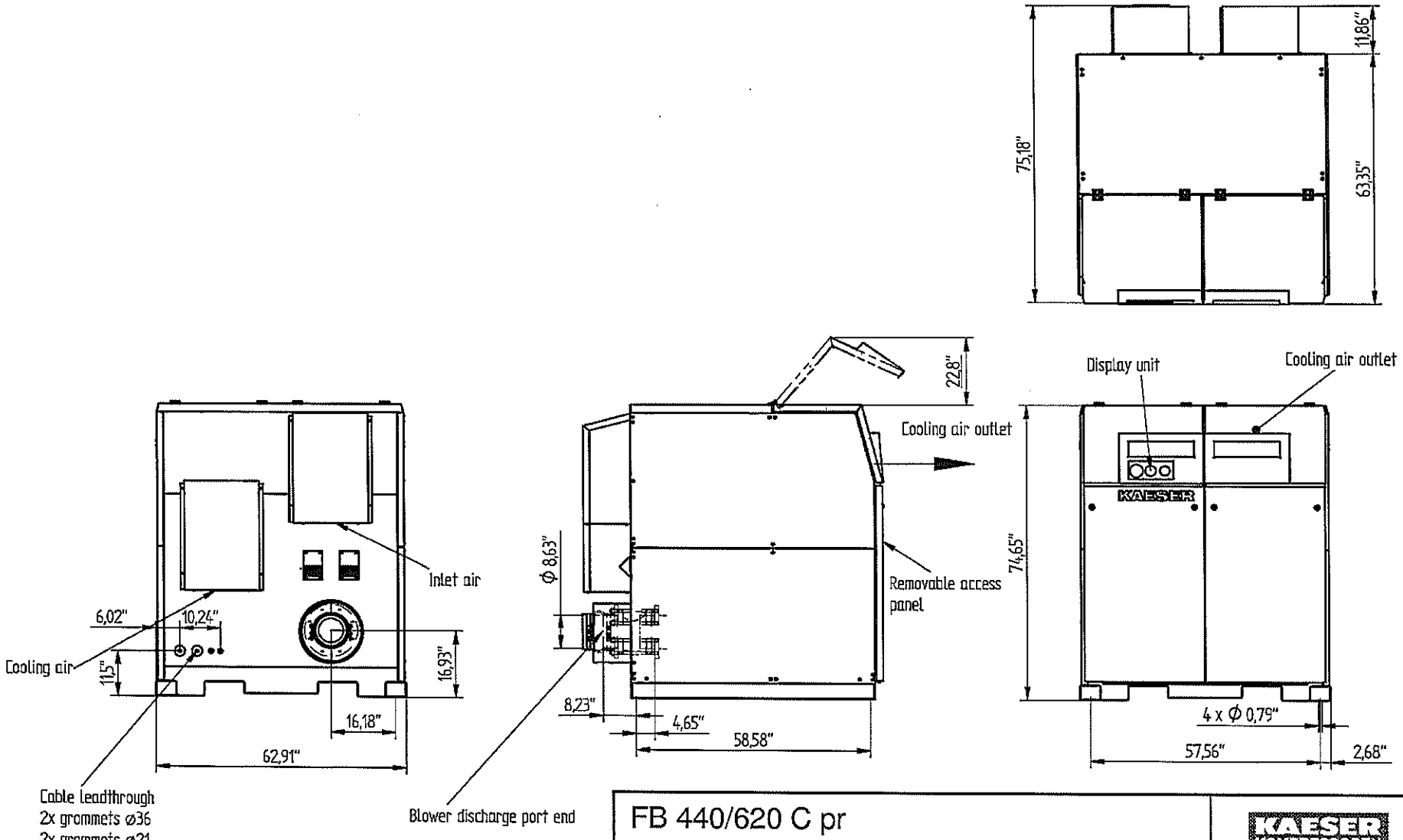

FB 440/620 C pr			
Stand: 23.6.2002	Datum: 23.6.2002	Name: Lummer	CAD-Datei: MB001877.dft

KAESER KOMPRESSOREN
— Werk Gera —

TECHNICAL PROPOSAL	OMEGA PLUS	More air flow With less energy	KAESER OMEGA BLOWERS

Project Reference: Aerobic Digester Blower
Prepared By: SCH
Location: Sludge Building
Date: 12/08/10
Customer: 319-139

KAESER

Com-paK Plus FB 440C / 62P

Rotary Blower Package

Gauge pressure application

For an oil-free conveying medium

Available with CE Manufacturer's Declaration within the meaning of Machinery Directive 98/37 EG, a. II B

Gas handled		Dry Air
Effective inlet air flow Q_1 at design point	1005	icfm
Inlet flow at standard conditions: Standard conditions 14.7 psia, 68 °F and 36% RH	1005	scfm
Blower speed at design conditions:	2690	rpm
Design conditions:		
Inlet pressure (absolute)	14.7	psia
Inlet temperature	68	°F
Pressure difference	7.0	psig
Discharge pressure (absolute)	21.7	psia
Discharge temperature	149	°F
Blower shaft power	39.5	bhp
Motor rated power	50.0	hp
Motor enclosure	TEFC	
Motor voltage / frequency	460V/ 60Hz	
Type of cooling	Air cooled	
Connection size	8"	
Volumetric efficiency	0.88	
	with enclosure	
Estimated noise level to DIN EN ISO 2151, figures ± 3 dB(A) with sound insulated piping	73	dB(A)
Dimension (L x W x H) inches	69 x 63 x 75	
Estimated Weight	ca. 3940	lbs

V 7.2 AD VERSION 24/01/06 T1

Kaeser Compressors, Inc.
P.O. Box 946
Fredericksburg, VA 22408
Tel.: (540) 898-5500 Fax.: -5520

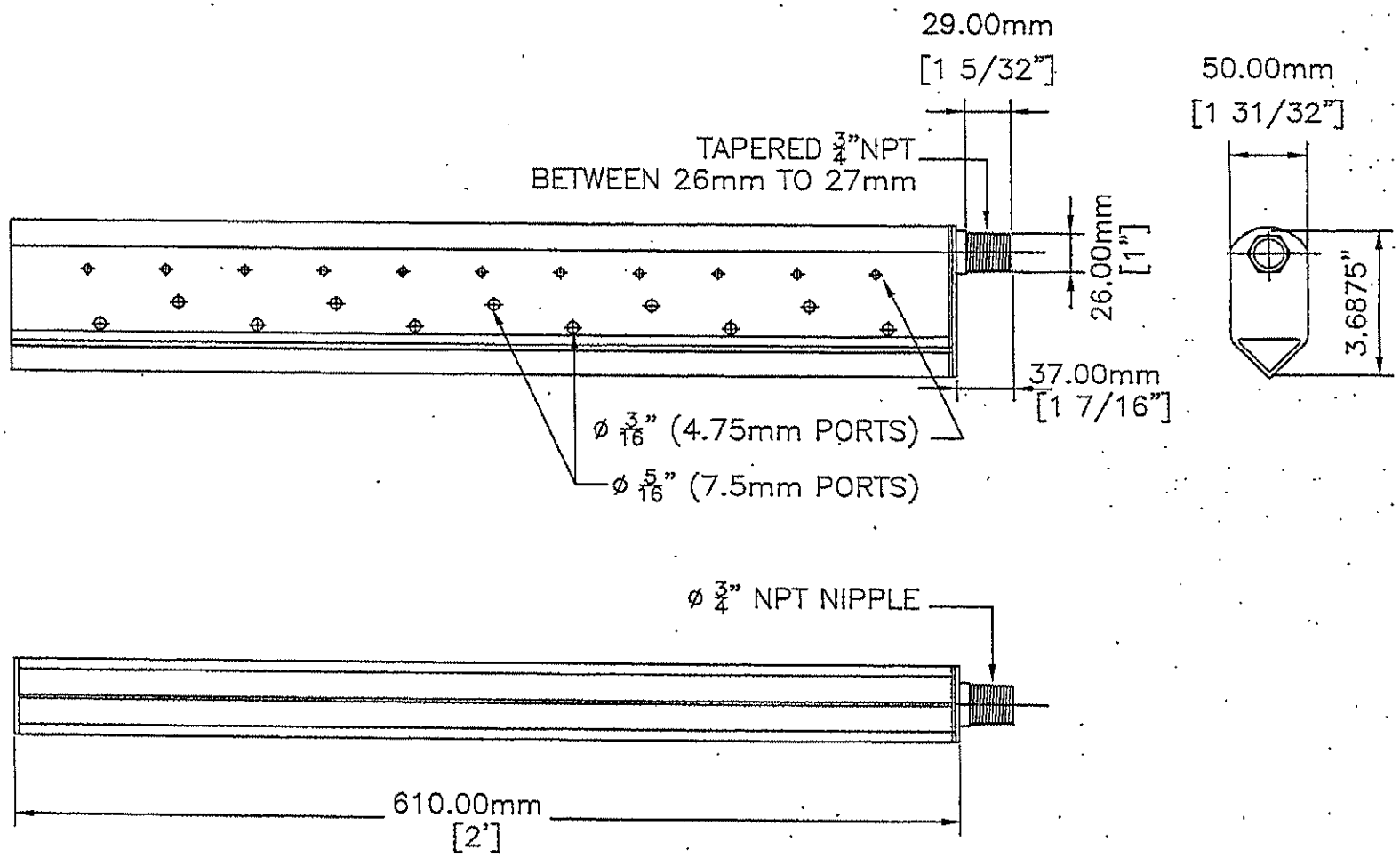

WIDE BAND COARSE BUBBLE DIFFUSER

MATERIAL:304L S.S

**NOTE
STAINLESS STEEL MODEL PROVIDED WITH 304 SS,
INTEGRAL HEX NUT
AND ø ¾"NPT CONNECTION

PART No.	PART NAME	MATERIAL	Q'TY	REMARKS

COARSE BUBBLE DIFFUSER

SCALE : NTS	DATE :	REVISED : M1	DRAWN BY :

SSI Stamford Scientific International, Inc.

DWG No. 6022-SD-001(WBCB)

PROJECT

12

ATTACHMENT B

and
GROUND WATER MONITORING PLAN
for the
THE LANDS OF WANDENDALE FARMS, INC.

Sussex County, Delaware

prepared for:

Tidewater Environmental Services, Inc.
1100 South Little Creek Road
Dover, Delaware 19901

prepared by:

Eastern Geosciences, Inc.
420 Commerce Lane, Suite 9
West Berlin, NJ 08091

EGI

EASTERN GEOSCIENCES, INC.
Hydrogeologic, Geothermal, & Geophysical Consulting

STATE OF DELAWARE
THOMAS E. DWYER
Thomas E. Dwyer, P.G.
No. 964
Registration #S40000964
REGISTERED PROFESSIONAL GEOLOGIST

October 2010

TABLE OF CONTENTS

	Page
1.0 Introduction	1
2.0 Flow Path Analysis	1
2.1 Analysis Methods and Assumptions	1
2.2 Flow Paths and Travel Times	1
3.0 Proposed Monitoring Wells and Piezometers	2
3.1 Monitoring Wells	2
3.2 Monitoring Parameters and Sampling Schedule	2
3.3 Piezometers and Ground-Water Level Monitoring	3
4.0 References	3

FIGURES (follow text)

Figure 1: Calculated Flow Paths and Travel Times for 1.45 MGD RIB Discharge

Figure 2: Vertical Flow Path Section Through RIB Area

Figure 3: Monitoring Well and Piezometer Construction

Figure 4: Proposed Monitoring Well and Piezometer Configuration

TABLES (follow figures)

Table 1: Numerical Ground-Water Model Parameters and Assumptions

Table 2: Ground-Water Monitoring Parameters and Schedule

1.0 INTRODUCTION

This ground-water monitoring plan has been prepared as a supplement to the September 2009 Hydrogeologic Evaluation report for the Lands of Wandendale Farms, Inc. (Reference 1). This monitoring plan pertains to the proposed rapid infiltration basin (RIB) discharge area referred to as RIB Area A. It is proposed that RIB Area A will be designed for a total discharge capacity of 1.45 MGD. The September 2009 report (Reference 1) provides all of the hydrogeologic data used for developing the flow path analysis used to formulate the monitoring plan.

2.0 FLOW PATH ANALYSIS

2.1 Analysis Methods and Assumptions

The calibrated, numerical, ground-water model described in Reference 1 was used to calculate ground-water flow paths for a design capacity of 1.45 MGD wastewater discharge at RIB Area A. The flow path calculations were performed for long-term, steady-state conditions. Ground-water levels were calculated using the U.S. Geological Survey's MODFLOW computer program (Reference 2). Ground-water flow paths and travel times were calculated with the MODPATH computer program (Reference 3) linked to MODFLOW. Model input parameters are summarized in Table 1.

2.2 Flow Paths and Travel Times

Calculated water-table elevations and ground-water flow paths for 1.45 MGD wastewater discharge at RIB Area A are illustrated in Figure 1. The proposed discharge results in a semi-radial ground-water flow path, with the majority of the flow being to the east, southeast, and south, following the regional hydraulic gradient. Most flow paths are very long, with travel times ranging from 15 years to 35 years prior to discharge to the downgradient surface water bodies. On the west side of RIB Area A, approximately ten percent of the flow is calculated to follow a shorter path of approximately five years to Sarah Run; however, this shorter path does not develop until flows reach approximately 1.2 MGD. Discharge occurs primarily to Love Creek, Burton Prong, Herring Creek and Rehoboth Bay.

An east-west simulation cross section through RIB Area A is shown on Figure 2. Water discharged at the RIB follows a nearly vertical flow path to the deeper portion of the flow system and then flows essentially horizontally to the distant boundary conditions. Based on this analysis, it is recommended that ground-water monitoring should focus on the deeper portion of the flow system.

3.0 PROPOSED MONITORING WELLS AND PIEZOMETERS

3.1 Monitoring Wells

The three-dimensional ground-water flow model calibrated for the site demonstrates that the wastewater discharge will quickly follow a deep flow path. Therefore, it is recommended that the monitoring wells all be completed within the lower portion of the ground-water flow system. As defined in Reference 1, the lower portion of the flow system occurs at an elevation of approximately five feet below mean sea level. Within RIB Area A, this corresponds to a depth of approximately 36 feet from existing grade. Twenty feet of well screen is recommended in order to obtain samples representative of this portion of the ground-water flow system. Therefore, the recommended screen interval for the monitoring wells is -5 to -25 ft-msl, or approximately 36 to 56 feet below existing grade. It is recommended that the wells be constructed with 4-inch-diameter screen and casing, so as to allow for sufficient development and pumping with a submersible pump. Because of the deep water table, it would be very difficult to adequately develop a 2-inch-diameter well, and this would subsequently hinder the ability to obtain representative samples. All monitoring wells should be equipped with protective steel casings and locking caps. The proposed monitoring well construction is illustrated in Figure 3. The existing monitoring wells on the site are too shallow to be used for this purpose. The deeper, existing piezometers are only one-inch diameter and, therefore, are too small to be sampled effectively.

Proposed monitoring well locations are illustrated on Figure 4. Five monitoring wells are recommended. Two wells, MW101 and MW102 located close to the northwestern side of RIB Area A, will provide monitoring along the relatively short flow paths between the discharge area and the nearby wells at the church and firehouse (Figure 4). These two wells will also serve as the upgradient monitoring wells during early, low-discharge-volume conditions, before the mounding is sufficient to reverse the hydraulic gradient close to RIB Area A. At higher discharge rates, flow paths originating from offsite will flow around the RIB area, and the onsite upgradient location will be the RIB area itself (Figure 1). Well MW102 will also provide monitoring along the flow path that crosses near domestic wells located along Jolyns Way (Figure 4). Wells MW103 and MW104 will intersect flow paths that cross near domestic wells located along Camp Arrowhead Road (Figure 4). Well MW105, located on the south side of RIB Area A, will provide monitoring of water quality along the shortest travel path between the RIB and the property boundary. The five monitoring wells will provide information on water quality over a relatively large range of distances from the RIB, which will be useful for subsequently evaluating dilution and adsorption characteristics of the site.

3.2 Monitoring Parameters and Sampling Schedule

Monitoring parameters required by DNREC are summarized in Table 2. In addition, it is recommended that Federal primary drinking water standards for volatile organic compounds and synthetic organic compounds be analyzed for samples from the five

monitoring wells for one pre-discharge background sampling event. All sampling shall be performed using a submersible sampling pump. A minimum of three well volumes shall be evacuated prior to collecting each set of samples, and the purged water shall have also stabilized with respect to field measurements of pH, specific conductance and temperature before the laboratory samples are collected. Depth to water shall be measured using an electric tape device with an accuracy of +/- 0.01 foot.

The sampling schedule required by DNREC is summarized in Table 2. Background sampling will consist of a minimum of three sampling events. Each background sampling event must be at least two weeks apart, and the sampling events must cover a period of at least three months. Upon system start-up, sampling shall be performed quarterly. In addition, it is recommended that volatile organic compounds and synthetic organic compounds be analyzed once each year.

3.3 Piezometers and Ground-Water Level Monitoring

It is recommended that four piezometers be installed within the berms separating the RIB segments. The piezometers will provide for water-level measurement to verify that the required two-foot unsaturated zone is being maintained below the basin infiltrative surface elevation. Proposed piezometer locations are shown Figure 4. Depending on how the project is phased, additional piezometer locations might be needed.

Maximum calculated ground-water mounding for the 1.45 MGD design discharge capacity is approximately 12 feet. It is recommended that the piezometers be screened ten feet below and ten feet above the seasonal high water level as defined for pre-discharge, natural conditions. For RIB Area A, the seasonal high water-level was determined to be at an elevation of approximately 13 ft-msl (Reference 1). This corresponds to a depth to water of approximately 18 feet below existing grade. The recommended screen interval for the piezometers is between 3.0 ft-msl and 23.0 ft-msl, or approximately 8.0 to 28.0 feet below existing grade. The piezometers should be constructed with two-inch-diameter screen and well casing, so as to facilitate the installation of pressure transducers for automatic water-level recording. Figure 3 provides details of the proposed piezometer construction. It is recommended that the pressure transducers be programmed to collect water level measurements on a once per day frequency.

4.0 REFERENCES

1. Eastern Geosciences, Inc., September 2009, "Hydrogeologic Evaluation for Subsurface Wastewater Discharge Capacity for The Lands of Wandendale Farms, Inc., Sussex County, Delaware", prepared for Tidewater Environmental Services, Inc., Dover, DE.

2. McDonald, M.G. and Harbaugh, A.W., 1988, A Modular, Three-Dimensional, Finite-Difference, Ground-Water Flow Model: U.S. Geological Survey Techniques of Water-Resources Investigations, Book 6, Chap. A1, 586 p.

3. Pollock, D.W., 1994. User's Guide for MODPATH/MODPATH-PLOT, Version 3: A particle tracking post-processing package for MODFLOW, the U.S. Geological Survey finite-difference ground-water flow model, U.S. Geological Survey Open-File Report 94-464.

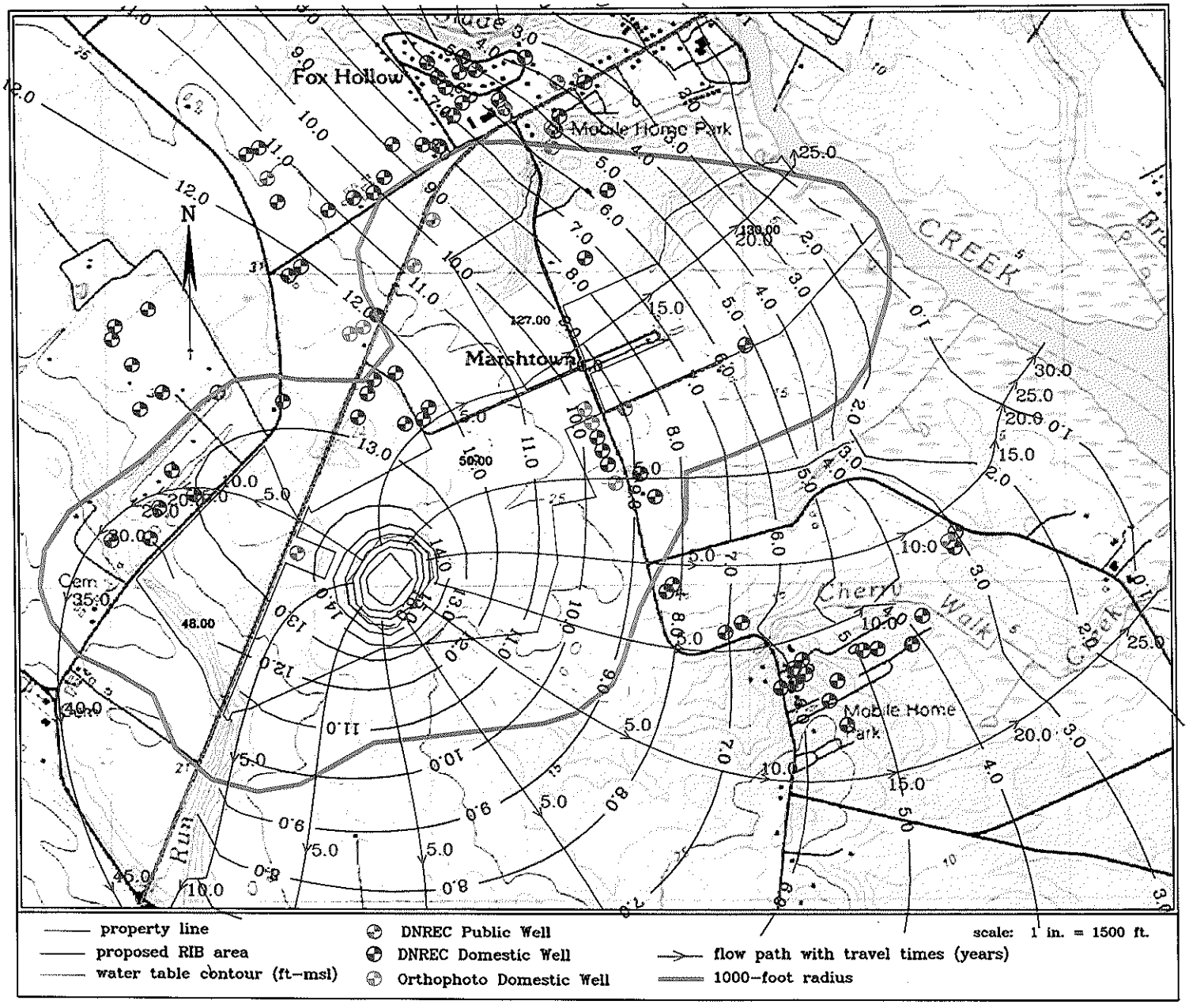

Figure 1: Calculated Flow Paths and Travel Times for 1.45 MGD RIB Discharge

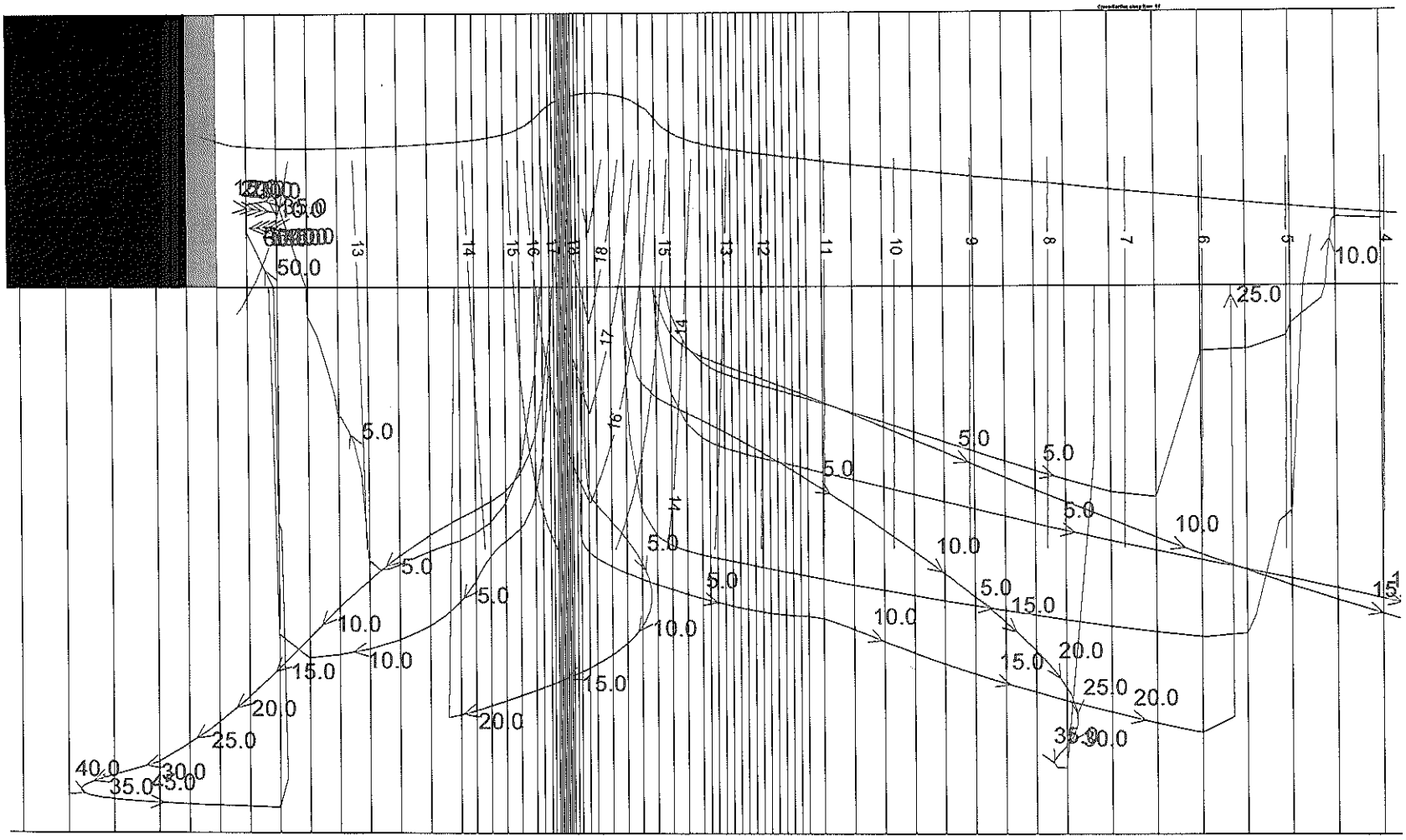

Figure 2: Vertical Flow Path Section Through RIB Area

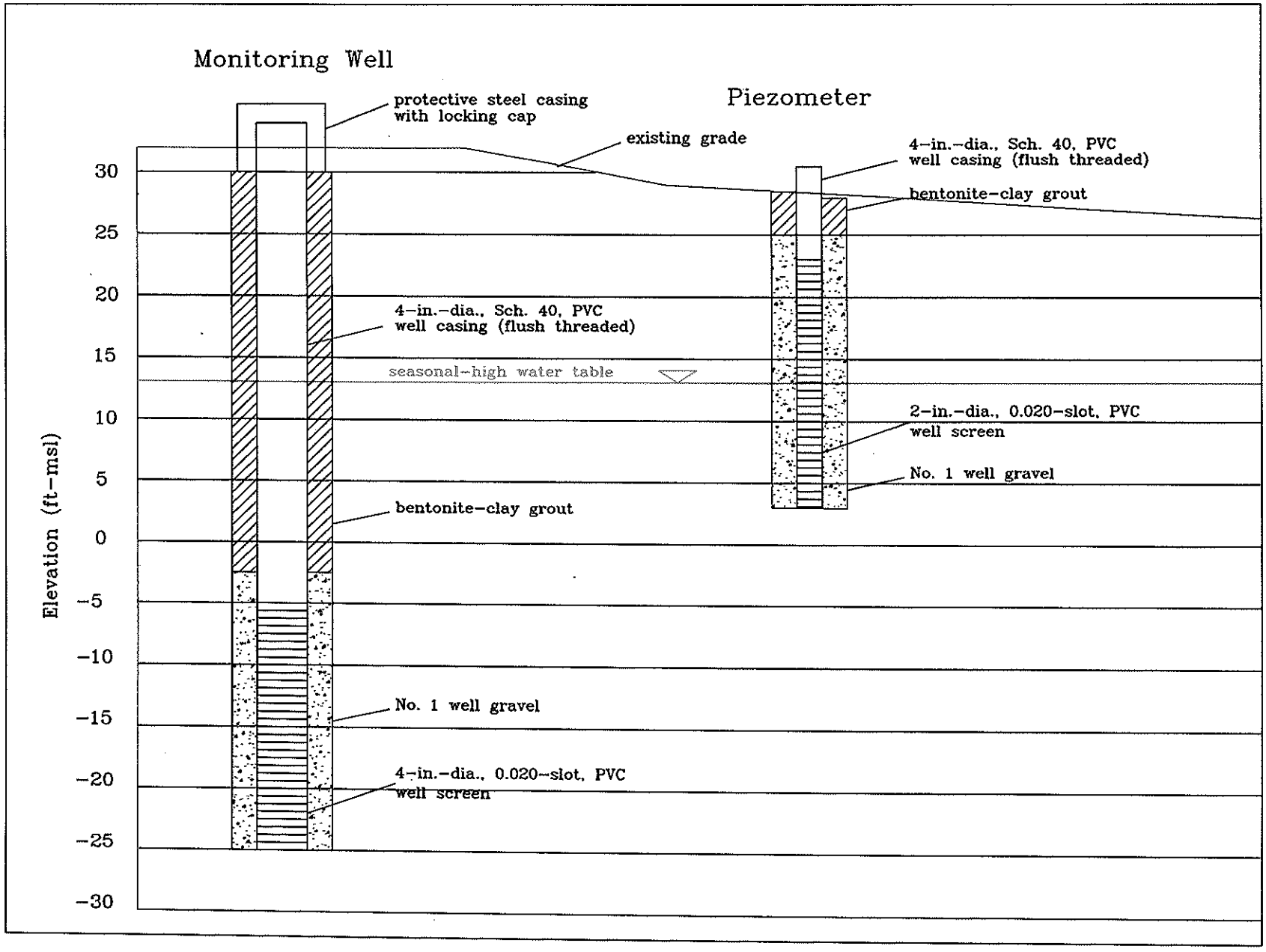

Figure 3: Monitoring Well and Piezometer Construction

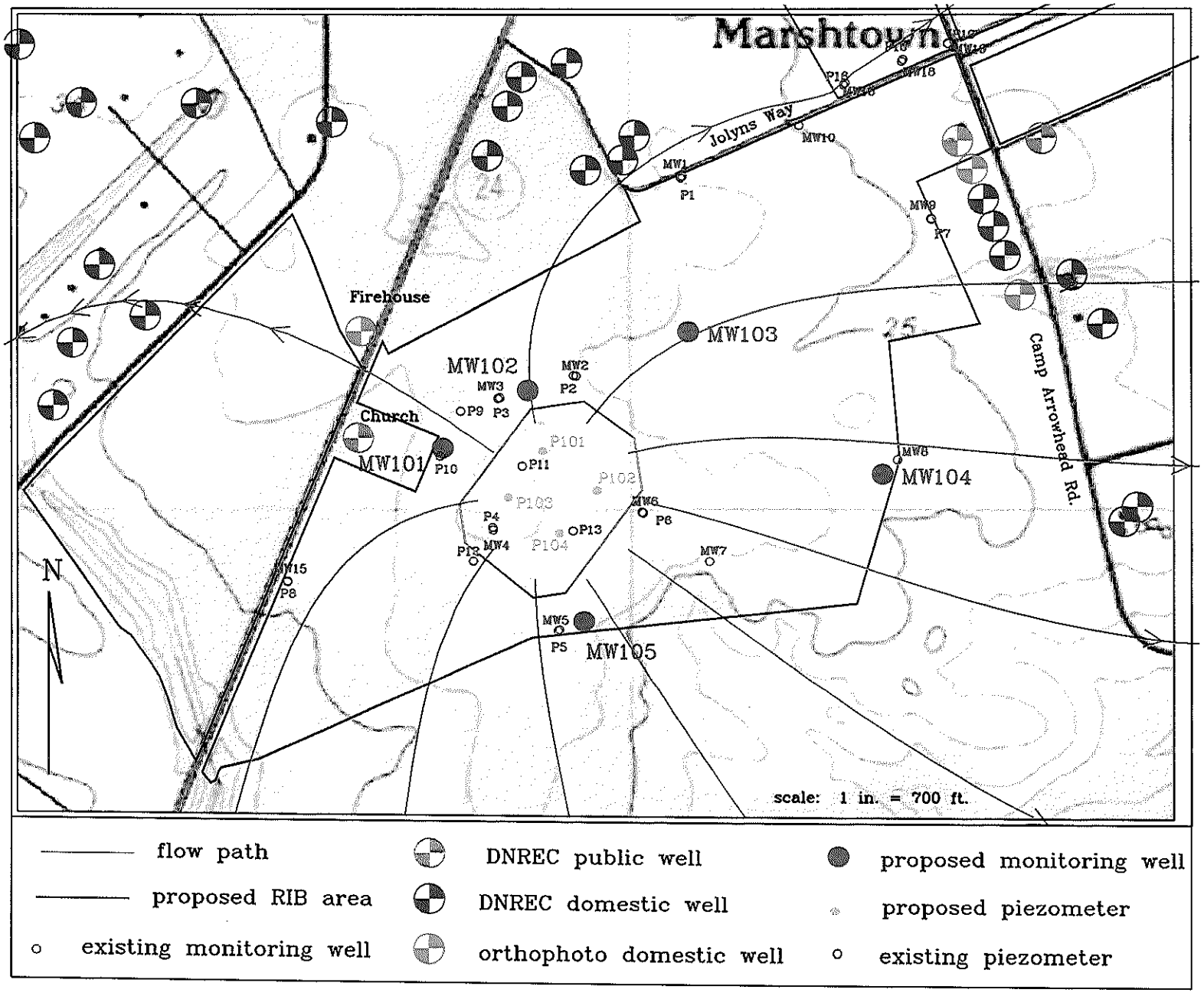

Figure 4: Proposed Monitoring Well and Piezometer Configuration

Table 1: Numerical Ground-Water Model Parameters and Assumptions

A. Finite Difference Grid and Boundary Conditions

1. Two-layer grid system.
2. Upper layer represents Lynch Heights formation.
3. Lower layer represents lower lithofacies of Beaverdam Sand aquifer.
4. Boundary between upper and lower layer is set at elevation -5.0 ft-msl.
5. Base of lower layer set at elevation -75 ft-msl.
6. Hydraulic connection between layers is controlled by vertical hydraulic conductivity and layer thickness.
7. Hydraulic discharge boundary conditions are: Love Creek; Sarah Run; Burton Prong; and Herring Creek.
8. Hydraulic discharge boundary conditions are represented by head-dependent drain and river cells.
9. Hydraulic discharge boundaries are defined in the layer in which they occur according to stream bottom elevation.

B. Layer 1 Hydraulic Parameters:

1. Recharge:
   a. Calibration and Mounding Simulations: 17.5 inches per year.
   b. Transport Simulations: 13.6 inches per year for average year conditions.
2. Horizontal Hydraulic Conductivity: 50 ft/d
3. Vertical Hydraulic Conductivity: 0.4 ft/d
4. Specific Yield: 0.10
5. Porosity: 0.3

Table 1: Numerical Ground-Water Model Parameters and Assumptions (continued)

C. **Layer 2 Hydraulic and Transport Parameters:**

1. Horizontal Hydraulic Conductivity: 65 and 200 ft/d
2. Vertical Hydraulic Conductivity: 20 ft/d
3. Storativity: 0.0006 and 0.1 ft/d
4. Porosity: 0.3

D. Boundary Condition Hydraulic Parameters:

1. Drain Cell Vertical Hydraulic Conductivity: 0.18 and 0.72 ft/d
2. River Cell Vertical Hydraulic Conductivity: 0.729 and 2.916 ft/d

E. Hydraulic Simulation Assumptions

1. Infiltration through the unsaturated zone is not simulated; only saturated ground-water flow is simulated.
2. Ground-water flow is simulated as steady-state.
3. Ground-water mounding is simulated for maximum proposed discharge occurring as a steady-state condition.
4. Ground-water mounding is simulated for wet-season conditions.

Table 2: Ground-Water Monitoring Parameters and Schedule

Parameter	Analysis	Background Frequency	Post-Startup Frequency
Depth to Water	Field	3/three months	quarterly
pH	Field	3/three months	quarterly
Specific Conductance	Field	3/three months	quarterly
Temperature	Field	3/three months	quarterly
Total Coliform	Laboratory	3/three months	quarterly
Fecal Coliform	Laboratory	3/three months	quarterly
Chloride	Laboratory	3/three months	quarterly
Total Nitrogen	Laboratory	3/three months	quarterly
Nitrate Nitrogen	Laboratory	3/three months	quarterly
Ammonia Nitrogen	Laboratory	3/three months	quarterly
Total Phosphorus	Laboratory	3/three months	quarterly
Volatile Organic Compounds	Laboratory	once	yearly
Synthetic Organic Compounds	Laboratory	once	yearly