NO.	BY	CHKD	APRV	REVISION	DATE

ALLEN HARIM FOODS, LLC

HARBESON, DELAWARE
WASTEWATER TREATMENT SYSTEM
UPGRADE & EXPANSION
PHASE TWO

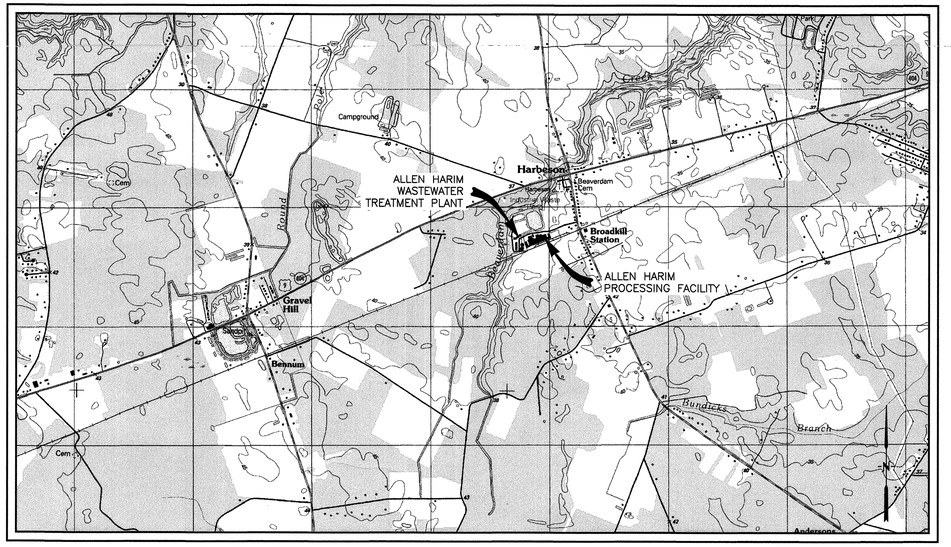

WWTP SITE VICINITY MAP
SCALE: 1"=2000'

The Earth is the Lord's...
Reid Engineering
Psalm 24:1

PROJECT CONTACTS

OWNER: ALLEN HARIM FOODS, LLC
POINT OF CONTACT:
JIM QUINTON
HARBESON, DE
PH: 302-381-8766

FACILITY LOCATION:
18752 HARBESON ROAD
HARBESON, DE 19951
PH: (302) 684-1640

CIVIL ENGINEER
JOHN H. REID, P.E.
REID ENGINEERING COMPANY, INC.
1210 PRINCESS ANNE STREET
FREDERICKSBURG, VA 22401
PH: 540.371.8500
FAX: 540.371.8576

STRUCTURAL ENGINEER
DONALD W. WHITMIRE, P.E.
ENGINEERING CONSULTANTS
113 PARKWOOD STREET, SUITE C
LOWELL, AR 72745
PH: 479.770.5366

ELECTRICAL ENGINEER
DONALD L YATES, P.E.
ELECTRICAL ENGINEERING
P.O. BOX 361
MONSFIELD, ARANSAS 72944
PH: 479.928.5295
FAX: 479.928.4531

UTILITY INFORMATION

ELECTRIC:
DELMARVA POWER
1-302-934-3342

NATURAL GAS:
CHESAPEAKE UTILITIES
1-800-427-0015

JOHN HAGER REID
LICENSE
No. 6580
COMMONWEALTH OF VIRGINIA
PROFESSIONAL ENGINEER
11/23/15
John H. Reid P.E.

DRAWN BY:	GDS
DESIGNED BY:	JHR
CHKD BY:	AEZ

THE INFORMATION CONTAINED HEREIN SHALL BE CONSIDERED PROPRIETARY TO REID ENGINEERING COMPANY, INC. ANY USE OR REPRODUCTION OF THIS INFORMATION WITHOUT THE EXPRESS WRITTEN CONSENT FROM REID ENGINEERING COMPANY, INC. IS HEREBY PROHIBITED.

REID ENGINEERING COMPANY, INC.
1210 Princess Anne Street
Fredericksburg, Virginia 22401
Tel:(540) 371-8500 Fax:(540) 371-8576

STATE SUBMITTAL
NOVEMBER 23, 2015

ALLEN HARIM FOODS, LLC
PHASE TWO
WASTEWATER TREATMENT SYSTEM
UPGRADE & EXPANSION

HARBESON, DELAWARE

DATE:	11-23-15	PROJECT NO.	AH02A
SCALE:	1"=2000'	DWG NO:	COVER

© COPYRIGHT 2015 – REID ENGINEERING COMPANY, INC.

NO.	BY	CHKD	APRV	REVISION	DATE

CIVIL
REID ENGINEERING COMPANY

	COVER SHEET
INDEX	DRAWING INDEX
C100	WASTEWATER TREATMENT SYSTEM EXISTING CONDITIONS SITE PLAN
C101	LOCATION PLAN KEY SHEET
C102	LOCATION PLAN SOUTHWEST AREA
C103	LOCATION PLAN NORTHEAST AREA
C200	UNDERGROUND PIPING PLAN KEY SHEET
C201	UNDERGROUND PIPING PLAN (SOUTHWEST AREA)
C202	UNDERGROUND PIPING PLAN (NORTHEAST AREA)
C203	UNDERGROUND PIPING PLAN AREA ENLARGEMENT
C204	UNDERGROUND PIPING PLAN AREA ENLARGEMENT

MECHANICAL
REID ENGINEERING COMPANY

F100	WASTEWATER FLOW SCHEMATIC
F101	HYDRAULIC PROFILE
M100	SOUTHWEST AREA PLAN KEY SHEET
M101	NORTHEAST AREA PLAN KEY SHEET
M200	FEB/ANOXIC REACTOR PIPING PLAN
M201	FEB/ANOXIC REACTOR SECTIONS & DETAILS
M300	EXISTING NITRIFICATION REACTOR No.2A PLAN
M301	EXISTING NITRIFICATION REACTOR No.2A SECTIONS & DETAILS
M400	NITRIFICATION REACTOR No.2B PLAN
M401	NITRIFICATION REACTOR No.2B SECTIONS & DETAILS
M500	ANOXIC REACTOR No.3 PLAN
M501	ANOXIC REACTOR No.3 SECTIONS & DETAILS
M600	AEROBIC REACTOR No.4 PLAN
M601	AEROBIC REACTOR No.4 SECTIONS & DETAILS
M602	AEROBIC REACTOR No.4 SECTIONS & DETAILS
M700	CLARIFIER AREA MODIFICATIONS PLAN
M800	EQUIPMENT BUILDING FOUNDATION & STUB-UP PLAN
M801	EQUIPMENT BUILDING EQUIPMENT LAYOUT
M802	TERTIARY FILTER EQUIPMENT SECTIONS & DETAILS
M803	BLOWER & JET PUMP SECTIONS & DETAILS
M900	WASTE SLUDGE STORAGE TANK PLAN
M901	WASTE SLUDGE STORAGE TANK SECTIONS & DETAILS
M1000	EXISTING DAF EQUIPMENT BUILDING SCREW PRESS PLAN
M1001	SCREW PRESS SECTIONS & DETAILS
D100	MISCELLANEOUS NOTES & DETAILS
D200	GENERAL PIPING NOTES & DETAILS
D300	GENERAL CHEMICAL NOTES & DETAILS

JOHN HAGER REID LICENSE No. 6580 PROFESSIONAL ENGINEER Virginia
11/23/15
John H. Reid P.E.

DRAWN BY:	GDS
DESIGNED BY:	JHR
CHKD BY:	AEZ

THE INFORMATION CONTAINED HEREIN SHALL BE CONSIDERED PROPRIETARY TO REID ENGINEERING COMPANY, INC. ANY USE OR RE-PRODUCTION OF THIS INFORMATION WITHOUT THE EXPRESS WRITTEN CONSENT FROM REID ENGINEERING COMPANY, INC. IS HEREBY PROHIBITED.

REID ENGINEERING COMPANY, INC.
1210 Princess Anne Street
Fredericksburg, Virginia 22401
Tel:(540) 371-8500 Fax:(540) 371-8576

DRAWING INDEX

ALLEN HARIM FOODS, LLC
PHASE TWO
WASTEWATER TREATMENT SYSTEM
UPGRADE & EXPANSION

HARBESON, DELAWARE

DATE:	11-23-15	PROJECT NO.	AH02A
SCALE:	NONE	DWG NO:	INDEX

© COPYRIGHT 2015 – REID ENGINEERING COMPANY, INC.

NO.	BY	CHKD	APRV	REVISION	DATE

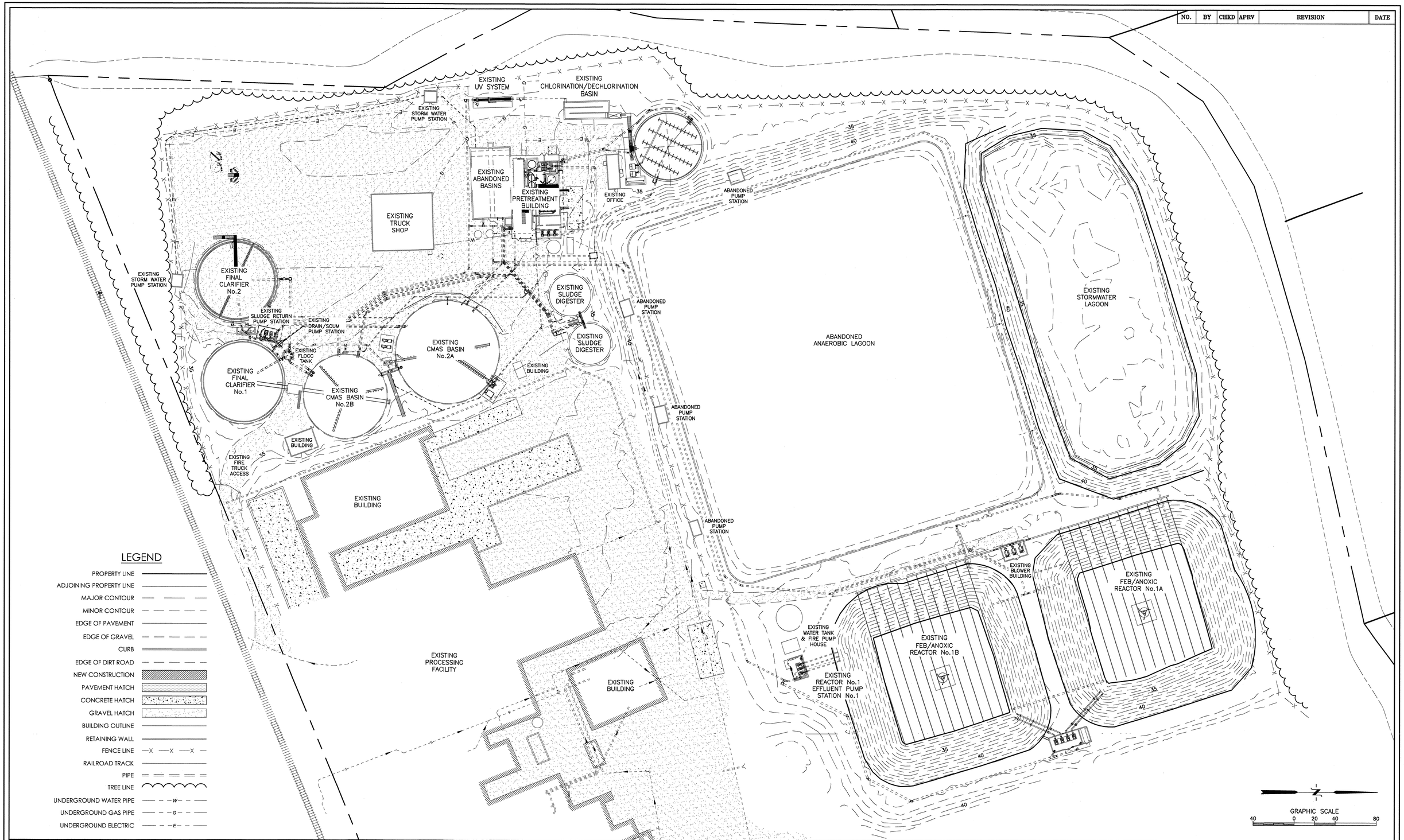

LEGEND

- PROPERTY LINE
- ADJOINING PROPERTY LINE
- MAJOR CONTOUR
- MINOR CONTOUR
- EDGE OF PAVEMENT
- EDGE OF GRAVEL
- CURB
- EDGE OF DIRT ROAD
- NEW CONSTRUCTION
- PAVEMENT HATCH
- CONCRETE HATCH
- GRAVEL HATCH
- BUILDING OUTLINE
- RETAINING WALL
- FENCE LINE —X —X —X —
- RAILROAD TRACK
- PIPE
- TREE LINE
- UNDERGROUND WATER PIPE —W—
- UNDERGROUND GAS PIPE —G—
- UNDERGROUND ELECTRIC —E—

SURVEY DATED 4/24/15 PROVIDED BY:
FULLER HALL & ASSOCIATES, INC.
1328 EAST MARKET STREET
GEORGETOWN, DE
1-302-297-9215

JOHN HAGER REID LICENSE No. 15580 PROFESSIONAL ENGINEER
11/23/15
John H. Reid P.E.

DRAWN BY:	GDS
DESIGNED BY:	JHR
CHKD BY:	AEZ

THE INFORMATION CONTAINED HEREIN SHALL BE CONSIDERED PROPRIETARY TO REID ENGINEERING COMPANY, INC. ANY USE OR RE-PRODUCTION OF THIS INFORMATION WITHOUT THE EXPRESS WRITTEN CONSENT FROM REID ENGINEERING COMPANY, INC. IS HEREBY PROHIBITED.

REID ENGINEERING COMPANY, INC.

1210 Princess Anne Street
Fredericksburg, Virginia 22401
Tel:(540) 371-8500 Fax:(540) 371-8576

WASTEWATER TREATMENT SYSTEM
EXISTING CONDITIONS SITE PLAN

ALLEN HARIM FOODS, LLC
PHASE TWO
WASTEWATER TREATMENT SYSTEM
UPGRADE & EXPANSION

HARBESON, DELAWARE

DATE:	11-23-15	PROJECT NO.	AH02A
SCALE:	1"=40'	DWG NO:	C100

© COPYRIGHT 2015 – REID ENGINEERING COMPANY, INC.

NO.	BY	CHKD	APRV	REVISION	DATE

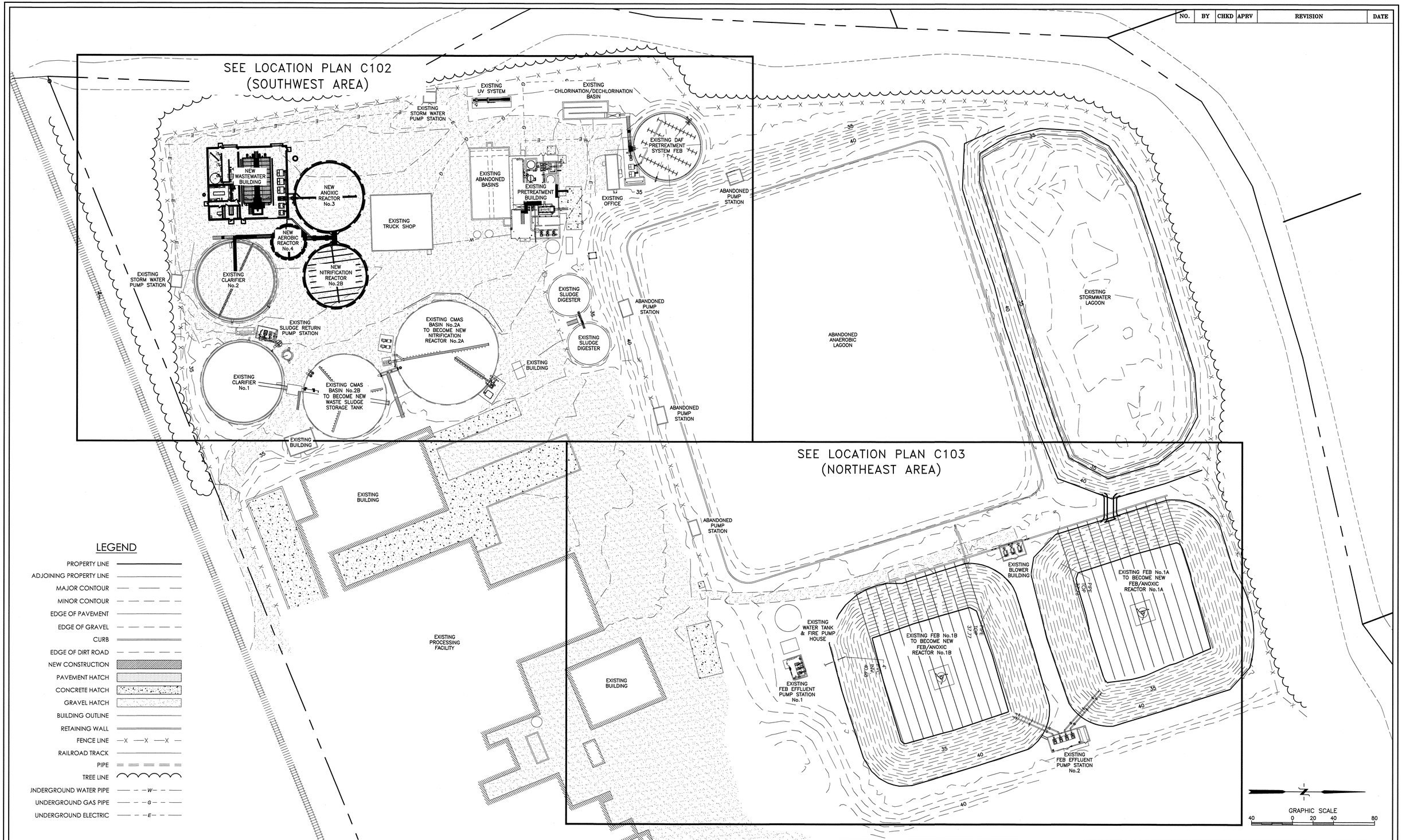

LEGEND

- PROPERTY LINE
- ADJOINING PROPERTY LINE
- MAJOR CONTOUR
- MINOR CONTOUR
- EDGE OF PAVEMENT
- EDGE OF GRAVEL
- CURB
- EDGE OF DIRT ROAD
- NEW CONSTRUCTION
- PAVEMENT HATCH
- CONCRETE HATCH
- GRAVEL HATCH
- BUILDING OUTLINE
- RETAINING WALL
- FENCE LINE —X —X —X —
- RAILROAD TRACK
- PIPE
- TREE LINE
- UNDERGROUND WATER PIPE — — —W— — —
- UNDERGROUND GAS PIPE — — —G— — —
- UNDERGROUND ELECTRIC — — —E— — —

JOHN HAGER REID LICENSE No. 8580 PROFESSIONAL ENGINEER
11-23-15
John H. Reid P.E.

DRAWN BY:	GDS
DESIGNED BY:	JHR
CHKD BY:	AEZ

THE INFORMATION CONTAINED HEREIN SHALL BE CONSIDERED PROPRIETARY TO REID ENGINEERING COMPANY, INC. ANY USE OR RE-PRODUCTION OF THIS INFORMATION WITHOUT THE EXPRESS WRITTEN CONSENT FROM REID ENGINEERING COMPANY, INC. IS HEREBY PROHIBITED.

REID ENGINEERING COMPANY, INC.
1210 Princess Anne Street
Fredericksburg, Virginia 22401
Tel:(540) 371-8500 Fax:(540) 371-8576

LOCATION PLAN
KEY SHEET

ALLEN HARIM FOODS, LLC
PHASE TWO
WASTEWATER TREATMENT SYSTEM
UPGRADE & EXPANSION

HARBESON, DELAWARE

DATE:	11-23-15	PROJECT NO.	AH02A
SCALE:	1"=40'	DWG NO:	C101

© COPYRIGHT 2015 – REID ENGINEERING COMPANY, INC.

NO.	BY	CHKD	APRV	REVISION	DATE

N 01°52'06" E

327.87'

EXISTING STORM WATER PUMP STATION

EXISTING UV SYSTEM

EXISTING CHLORINATION/DECHLORINATION BASIN

EXISTING DAF PRETREATMENT SYSTEM FEB
TOP=60.08
HWL=58.50
LWL=39.00
BOT=34.00

78'

70'

NEW WASTEWATER BUILDING
FF=32.50

6'

NEW ANOXIC REACTOR No.3
TOP=59.50
HWL=57.50
BOT=32.50

6' (REF.)

EXISTING ABANDONED BASINS

EXISTING RAW WASTE PUMP STATION

EXISTING DAF CELL

EXISTING DAF/PRETREATMENT BUILDING

NEW SCREW PRESS

EXISTING OFFICE

21' (REF.)

6'-9"

8' (REF.)

NEW AEROBIC REACTOR No.4
TOP=59.50
HWL=57.50
BOT=32.50

54'

EXISTING TRUCK SHOP

34'-10"

11'-4"

EXISTING DAF EFFLUENT PUMP STATION

8' (REF.)

11'-8" REF.

23'

EXISTING STORM WATER PUMP STATION

EXISTING CLARIFIER No.2
TOP=46.16
HWL=44.50
BOT=32.33

8' (REF.)

NEW NITRIFICATION REACTOR No.2B
TOP=60.50
HWL=58.50
BOT=32.50

36'

40'

80'-9"

EXISTING SLUDGE DIGESTER No.1
NEW SLUDGE DIGESTER No.2

ABANDONED PUMP STATION

EXISTING RAS & WAS PUMP STATION

EXISTING CMAS BASIN No.1 TO BECOME NEW NITRIFICATION REACTOR No.2A

EXISTING SLUDGE DIGESTER No.1
NEW SLUDGE DIGESTER No.3

ABANDONED ANAEROBIC LAGOON

EXISTING BUILDING

EXISTING CLARIFIER No.1
TOP=47.40
HWL=44.50
BOT=33.50

EXISTING CMAS BASIN No.2 TO BECOME NEW SLUDGE DIGESTER No.1

ABANDONED PUMP STATION

EXISTING BUILDING

35

40

MATCH LINE SHEET C103

LEGEND

- PROPERTY LINE
- ADJOINING PROPERTY LINE
- MAJOR CONTOUR
- MINOR CONTOUR
- EDGE OF PAVEMENT
- EDGE OF GRAVEL
- CURB
- EDGE OF DIRT ROAD
- NEW CONSTRUCTION
- PAVEMENT HATCH
- CONCRETE HATCH
- GRAVEL HATCH
- BUILDING OUTLINE
- RETAINING WALL
- FENCE LINE —X —X —X —
- RAILROAD TRACK
- PIPE
- TREE LINE
- UNDERGROUND WATER PIPE — — —W— — —
- UNDERGROUND GAS PIPE — — —G— — —
- UNDERGROUND ELECTRIC — — —E— — —

LEGEND

DETAIL NUMBER — 2 / 2 — SHEET DETAIL IS DRAWN ON

SECTION NUMBER — 2 / 2 — SHEET SECTION IS DRAWN ON

GRAPHIC SCALE
20 0 10 20 40

JOHN HAGER REID
LICENSE
No. 6560
PROFESSIONAL ENGINEER
11/23/15

John H. Reid P.E.

DRAWN BY:	GDS
DESIGNED BY:	JHR
CHKD BY:	AEZ

THE INFORMATION CONTAINED HEREIN SHALL BE CONSIDERED PROPRIETARY TO REID ENGINEERING COMPANY, INC. ANY USE OR RE-PRODUCTION OF THIS INFORMATION WITHOUT THE EXPRESS WRITTEN CONSENT FROM REID ENGINEERING COMPANY, INC. IS HEREBY PROHIBITED.

REID ENGINEERING COMPANY, INC.

1210 Princess Anne Street
Fredericksburg, Virginia 22401
Tel:(540) 371-8500 Fax:(540) 371-8576

LOCATION PLAN
(SOUTHWEST AREA)

ALLEN HARIM, LLC
PHASE TWO
WASTEWATER TREATMENT SYSTEM
UPGRADE & EXPANSION

HARBESON, DELAWARE

DATE:	11-23-15	PROJECT NO.	AH02A
SCALE:	1"=20'	DWG NO:	C102

© COPYRIGHT 2015 – REID ENGINEERING COMPANY, INC.

NO.	BY	CHKD	APRV	REVISION	DATE

MATCH LINE SHEET C102

ABANDONED ANAEROBIC LAGOON

ABANDONED PUMP STATION

EXISTING STORMWATER/EMERGENCY STORAGE LAGOON

NEW REACTOR No.1A EMERGENCY OVERFLOW

6'

43

42.50

40

42

43

40

EXISTING BLOWER BUILDING

EXISTING FEB/ANOXIC REACTOR No.1A

TOP=43.30
HWL=42.20
LWL=35.70
BOT=30.20

EXISTING WATER STORAGE TANK

EXISTING FIRE PUMP HOUSE

EXISTING REACTOR No.1 EFFLUENT PUMP STATION No.1

EXISTING FEB/ANOXIC REACTOR No.1B

TOP=43.00
HWL=42.20
LWL=35.70
BOT=30.20

35

40

REACTOR No.1 EFFLUENT PUMP STATION No.2

LEGEND

- PROPERTY LINE
- ADJOINING PROPERTY LINE
- MAJOR CONTOUR
- MINOR CONTOUR
- EDGE OF PAVEMENT
- EDGE OF GRAVEL
- CURB
- EDGE OF DIRT ROAD
- NEW CONSTRUCTION
- PAVEMENT HATCH
- CONCRETE HATCH
- GRAVEL HATCH
- BUILDING OUTLINE
- RETAINING WALL
- FENCE LINE —X —X —X —
- RAILROAD TRACK
- PIPE
- TREE LINE
- UNDERGROUND WATER PIPE — — —W— — —
- UNDERGROUND GAS PIPE — — —G— — —
- UNDERGROUND ELECTRIC — — —E— — —

LEGEND

FITTING SIZE — (8"–04) — FITTING TYPE

PIPE SIZE — 8" (14) — PIPE TYPE

VALVE SIZE — 8" (F) — VALVE TYPE

(SEE SHEET D100 FOR SCHEDULES & DESCRIPTIONS)

DETAIL NUMBER — 2 / 2 — SHEET DETAIL IS DRAWN ON

SECTION NUMBER — 2 / 2 — SHEET SECTION IS DRAWN ON

GRAPHIC SCALE

20 0 10 20 40

811 Know what's below. Call before you dig.

JOHN HAGER REID LICENSE No. 6550 PROFESSIONAL ENGINEER COMMONWEALTH OF VIRGINIA

11/23/15

John H. Reid P.E.

DRAWN BY:	GDS
DESIGNED BY:	JHR
CHKD BY:	AEZ

THE INFORMATION CONTAINED HEREIN SHALL BE CONSIDERED PROPRIETARY TO REID ENGINEERING COMPANY, INC. ANY USE OR REPRODUCTION OF THIS INFORMATION WITHOUT THE EXPRESS WRITTEN CONSENT FROM REID ENGINEERING COMPANY, INC. IS HEREBY PROHIBITED.

REID ENGINEERING COMPANY, INC.

1210 Princess Anne Street
Fredericksburg, Virginia 22401
Tel:(540) 371–8500 Fax:(540) 371–8576

LOCATION PLAN (NORTHEAST AREA)

ALLEN HARIM, LLC
PHASE TWO
WASTEWATER TREATMENT SYSTEM
UPGRADE & EXPANSION

HARBESON, DELAWARE

DATE:	11–23–15	PROJECT NO.	AH02A
SCALE:	1"=20'	DWG NO:	C103

© COPYRIGHT 2015 – REID ENGINEERING COMPANY, INC.

NO.	BY	CHKD	APRV	REVISION	DATE

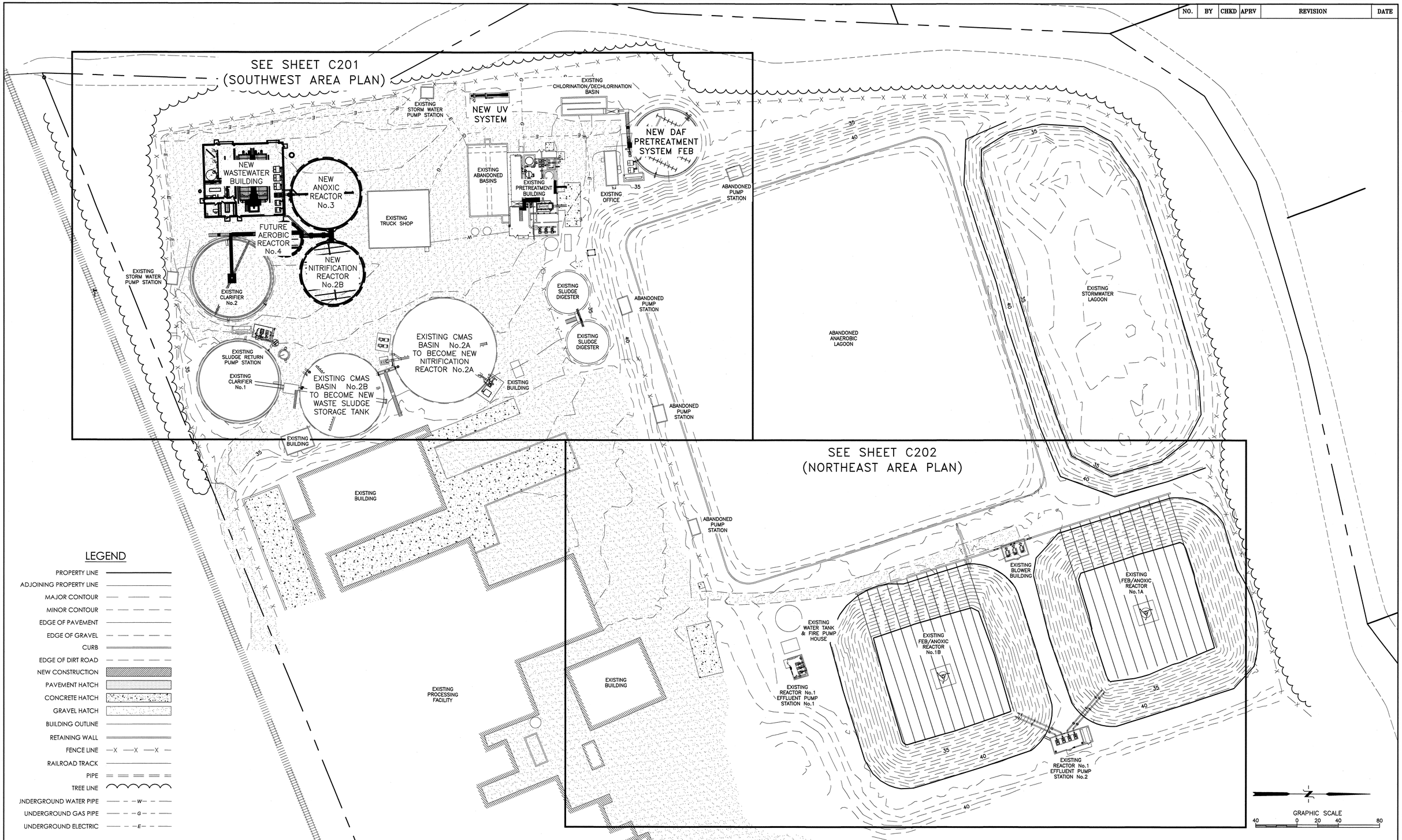

LEGEND

- PROPERTY LINE
- ADJOINING PROPERTY LINE
- MAJOR CONTOUR
- MINOR CONTOUR
- EDGE OF PAVEMENT
- EDGE OF GRAVEL
- CURB
- EDGE OF DIRT ROAD
- NEW CONSTRUCTION
- PAVEMENT HATCH
- CONCRETE HATCH
- GRAVEL HATCH
- BUILDING OUTLINE
- RETAINING WALL
- FENCE LINE —X —X —X —
- RAILROAD TRACK
- PIPE
- TREE LINE
- UNDERGROUND WATER PIPE —— – –W– – ——
- UNDERGROUND GAS PIPE —— – –G– – ——
- UNDERGROUND ELECTRIC —— – –E– – ——

© COPYRIGHT 2015 – REID ENGINEERING COMPANY, INC.

JOHN HAGER REID LICENSE No. 6580 PROFESSIONAL ENGINEER
11/23/15
John H. Reid P.E.

DRAWN BY:	GDS
DESIGNED BY:	JHR
CHKD BY:	AEZ

THE INFORMATION CONTAINED HEREIN SHALL BE CONSIDERED PROPRIETARY TO REID ENGINEERING COMPANY, INC. ANY USE OR RE-PRODUCTION OF THIS INFORMATION WITHOUT THE EXPRESS WRITTEN CONSENT FROM REID ENGINEERING COMPANY, INC. IS HEREBY PROHIBITED.

REID ENGINEERING COMPANY, INC.
1210 Princess Anne Street
Fredericksburg, Virginia 22401
Tel:(540) 371-8500 Fax:(540) 371-8576

UNDERGROUND PIPING
KEY SHEET

ALLEN HARIM FOODS, LLC
PHASE TWO
WASTEWATER TREATMENT SYSTEM
UPGRADE & EXPANSION

HARBESON, DELAWARE

DATE:	11-23-15	PROJECT NO.	AH02A
SCALE:	1"=40'	DWG NO:	C200

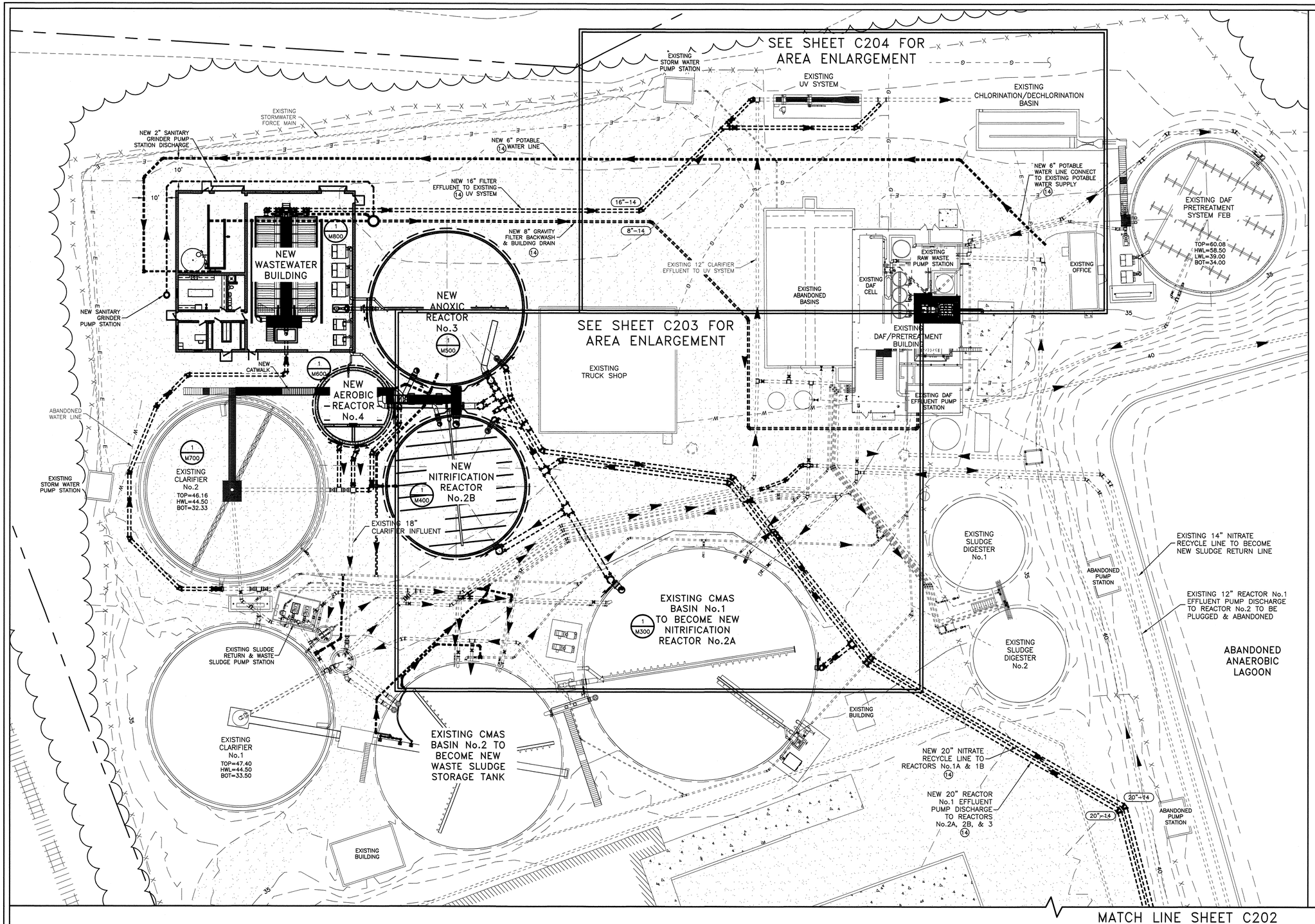

NO.	BY	CHKD	APRV	REVISION	DATE

NOTES:

1. THE CONTRACTOR SHALL CONTACT "MISS UTILITY" OF DELMARVA 1-800-282-8555 PRIOR TO PERFORMING ANY EARTHWORK ACTIVITIES AND COMPLY WITH ALL LOCAL AND STATE LAWS AND REGULATIONS PERTAINING TO EXCAVATION.

2. CONTRACTOR SHALL MAINTAIN A MINIMUM VERTICAL SEPARATION OF 6" BETWEEN ALL PIPES. MINIMUM CLEAR VERTICAL SEPARATION BETWEEN POTABLE WATER LINES AND SEWER LINES SHALL BE 18", OR CONCRETE ENCASEMENT. IF NOT POSSIBLE (6" MINIMUM CONCRETE ALL AROUND PIPE).

3. MINIMUM PIPE COVER SHALL BE 24" UNLESS OTHERWISE NOTED.

4. THE CONTRACTOR SHALL BE RESPONSIBLE FOR NOTIFYING THE OWNER AND THE ENGINEER OF ANY CHANGES OF CONDITIONS ATTACHED TO PERMITS OBTAINED FROM THE AUTHORITY ISSUING PERMITS.

5. REID ENGINEERING COMPANY DOES NOT CERTIFY TO THE LOCATION OF OR THE EXISTENCE OF ANY EXISTING UNDERGROUND UTILITIES. THE UNDERGROUND UTILITIES SHOWN HERON ARE BASED UPON AVAILABLE RECORDS. THIS DOES NOT CONSTITUTE A GUARANTEE OF THEIR ACTUAL LOCATIONS OR THAT THEY HAVE ALL BEEN SHOWN.

6. THE CONTRACTOR SHALL BE RESPONSIBLE FOR THE DIGGING OF TEST HOLES PRIOR TO BEGINNING ANY CONSTRUCTION OR ORDERING PIPE MATERIALS. THESE TEST HOLES WILL BE MADE TO VERIFY ALL CROSSINGS BETWEEN NEW AND EXISTING UTILITIES AND AT CRITICAL GRADE CHANGES. IF CONDITIONS ARE FOUND IN THE FIELD WHICH ARE MATERIALLY DIFFERENT FROM THE PLANS THE CONTRACTOR SHALL NOTIFY THE OWNER AND REID ENGINEERING COMPANY IMMEDIATELY.

7. THE CONTRACTOR SHALL MAINTAIN AS-BUILTS ON SITE OF THE INSTALLED PIPE LOCATIONS. AS-BUILT INFORMATION SHALL INCLUDE HORIZONTAL AND VERTICAL INFORMATION ON ALL UNDERGROUND PIPE FITTINGS AND AT ALL HIGH AND LOW POINTS IN THE PIPE PROFILES. CONTRACTOR SHALL SUBMIT AS-BUILT INFORMATION TO REID ENGINEERING FOR THE PREPARATION OF PROJECT RECORD DRAWINGS.

8. REFER TO MECHANICAL "M" SHEETS FOR ADDITIONAL INFORMATION AND PIPING DETAILS.

9. REFER TO STRUCTURAL "S" SHEETS FOR FOUNDATION INFORMATION AND DETAILS.

10. REFER TO "D" SHEETS FOR ALL GENERAL PIPING NOTES, DETAILS, CALLOUTS, RESTRAINED JOINTS, AND BEDDING REQUIREMENTS.

LEGEND

FITTING SIZE — 8"-04 — FITTING TYPE

PIPE SIZE — 8" 14 — PIPE TYPE

VALVE SIZE — 8" F — VALVE TYPE

(SEE SHEET D100 FOR SCHEDULES & DESCRIPTIONS)

DETAIL NUMBER — 2 / 2 — SHEET DETAIL IS DRAWN ON

SECTION NUMBER — 2 / 2 — SHEET SECTION IS DRAWN ON

GRAPHIC SCALE

20 0 10 20 40

© COPYRIGHT 2015 – REID ENGINEERING COMPANY, INC.

811 Know what's below. Call before you dig.

JOHN HAGER REID LICENSE No. 5580 PROFESSIONAL ENGINEER COMMONWEALTH OF VIRGINIA

11/23/15

John H. Reid P.E.

DRAWN BY:	GDS
DESIGNED BY:	JHR
CHKD BY:	AEZ

THE INFORMATION CONTAINED HEREIN SHALL BE CONSIDERED PROPRIETARY TO REID ENGINEERING COMPANY, INC. ANY USE OR RE-PRODUCTION OF THIS INFORMATION WITHOUT THE EXPRESS WRITTEN CONSENT FROM REID ENGINEERING COMPANY, INC. IS HEREBY PROHIBITED.

REID ENGINEERING COMPANY, INC.

1210 Princess Anne Street
Fredericksburg, Virginia 22401
Tel:(540) 371-8500 Fax:(540) 371-8576

UNDERGROUND PIPING PLAN (SOUTHWEST AREA)

ALLEN HARIM, LLC
PHASE TWO
WASTEWATER TREATMENT SYSTEM
UPGRADE & EXPANSION

HARBESON, DELAWARE

DATE:	11-23-15	PROJECT NO.	AH02A
SCALE:	1"=20'	DWG NO:	C201

NO.	BY	CHKD	APRV	REVISION	DATE

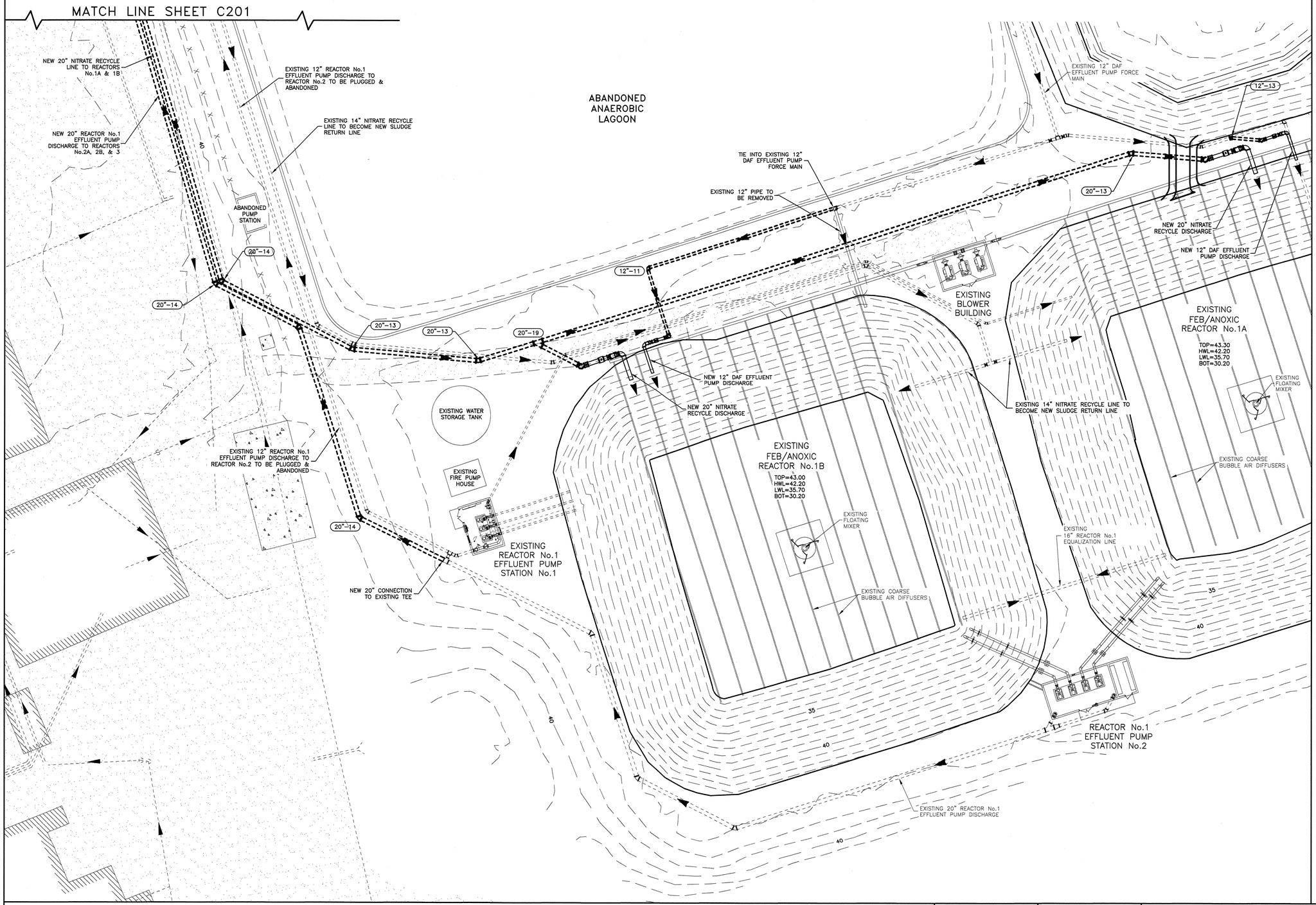

NOTES:

1. THE CONTRACTOR SHALL CONTACT "MISS UTILITY" OF DELMARVA 1-800-282-8555 PRIOR TO PERFORMING ANY EARTHWORK ACTIVITIES AND COMPLY WITH ALL LOCAL AND STATE LAWS AND REGULATIONS PERTAINING TO EXCAVATION.

2. CONTRACTOR SHALL MAINTAIN A MINIMUM VERTICAL SEPARATION OF 6" BETWEEN ALL PIPES. MINIMUM CLEAR VERTICAL SEPARATION BETWEEN POTABLE WATER LINES AND SEWER LINES SHALL BE 18", OR CONCRETE ENCASEMENT. IF NOT POSSIBLE (6" MINIMUM CONCRETE ALL AROUND PIPE).

3. MINIMUM PIPE COVER SHALL BE 24" UNLESS OTHERWISE NOTED.

4. THE CONTRACTOR SHALL BE RESPONSIBLE FOR NOTIFYING THE OWNER AND THE ENGINEER OF ANY CHANGES OF CONDITIONS ATTACHED TO PERMITS OBTAINED FROM THE AUTHORITY ISSUING PERMITS.

5. REID ENGINEERING COMPANY DOES NOT CERTIFY TO THE LOCATION OF OR THE EXISTENCE OF ANY EXISTING UNDERGROUND UTILITIES. THE UNDERGROUND UTILITIES SHOWN HERON ARE BASED UPON AVAILABLE RECORDS. THIS DOES NOT CONSTITUTE A GUARANTEE OF THEIR ACTUAL LOCATIONS OR THAT THEY HAVE ALL BEEN SHOWN.

6. THE CONTRACTOR SHALL BE RESPONSIBLE FOR THE DIGGING OF TEST HOLES PRIOR TO BEGINNING ANY CONSTRUCTION OR ORDERING PIPE MATERIALS. THESE TEST HOLES WILL BE MADE TO VERIFY ALL CROSSINGS BETWEEN NEW AND EXISTING UTILITIES AND AT CRITICAL GRADE CHANGES. IF CONDITIONS ARE FOUND IN THE FIELD WHICH ARE MATERIALLY DIFFERENT FROM THE PLANS THE CONTRACTOR SHALL NOTIFY THE OWNER AND REID ENGINEERING COMPANY IMMEDIATELY.

7. THE CONTRACTOR SHALL MAINTAIN AS-BUILTS ON SITE OF THE INSTALLED PIPE LOCATIONS. AS-BUILT INFORMATION SHALL INCLUDE HORIZONTAL AND VERTICAL INFORMATION ON ALL UNDERGROUND PIPE FITTINGS AND AT ALL HIGH AND LOW POINTS IN THE PIPE PROFILES. CONTRACTOR SHALL SUBMIT AS-BUILT INFORMATION TO REID ENGINEERING FOR THE PREPARATION OF PROJECT RECORD DRAWINGS.

8. REFER TO MECHANICAL "M" SHEETS FOR ADDITIONAL INFORMATION AND PIPING DETAILS.

9. REFER TO STRUCTURAL "S" SHEETS FOR FOUNDATION INFORMATION AND DETAILS.

10. REFER TO "D" SHEETS FOR ALL GENERAL PIPING NOTES, DETAILS, CALLOUTS, RESTRAINED JOINTS, AND BEDDING REQUIREMENTS.

LEGEND

FITTING SIZE — 8"-04 — FITTING TYPE

PIPE SIZE — 8" 14 — PIPE TYPE

VALVE SIZE — 8" F — VALVE TYPE

(SEE SHEET D100 FOR SCHEDULES & DESCRIPTIONS)

DETAIL NUMBER — 2 / 2 — SHEET DETAIL IS DRAWN ON

SECTION NUMBER — 2 / 2 — SHEET SECTION IS DRAWN ON

GRAPHIC SCALE

20 0 10 20 40

811 Know what's below. Call before you dig.

JOHN HAGER REID LICENSE No. 6580 DELAWARE PROFESSIONAL ENGINEER

11/23/15

John H. Reid P.E.

DRAWN BY:	GDS
DESIGNED BY:	JHR
CHKD BY:	AEZ

THE INFORMATION CONTAINED HEREIN SHALL BE CONSIDERED PROPRIETARY TO REID ENGINEERING COMPANY, INC. ANY USE OR REPRODUCTION OF THIS INFORMATION WITHOUT THE EXPRESS WRITTEN CONSENT FROM REID ENGINEERING COMPANY, INC. IS HEREBY PROHIBITED.

REID ENGINEERING COMPANY, INC.

1210 Princess Anne Street
Fredericksburg, Virginia 22401
Tel:(540) 371-8500 Fax:(540) 371-8576

UNDERGROUND PIPING PLAN
(NORTHEAST AREA)

ALLEN HARIM, LLC
PHASE TWO
WASTEWATER TREATMENT SYSTEM
UPGRADE & EXPANSION

HARBESON, DELAWARE

DATE:	11-23-15	PROJECT NO.	AH02A
SCALE:	1"=20'	DWG NO:	C202

© COPYRIGHT 2015 - REID ENGINEERING COMPANY, INC.

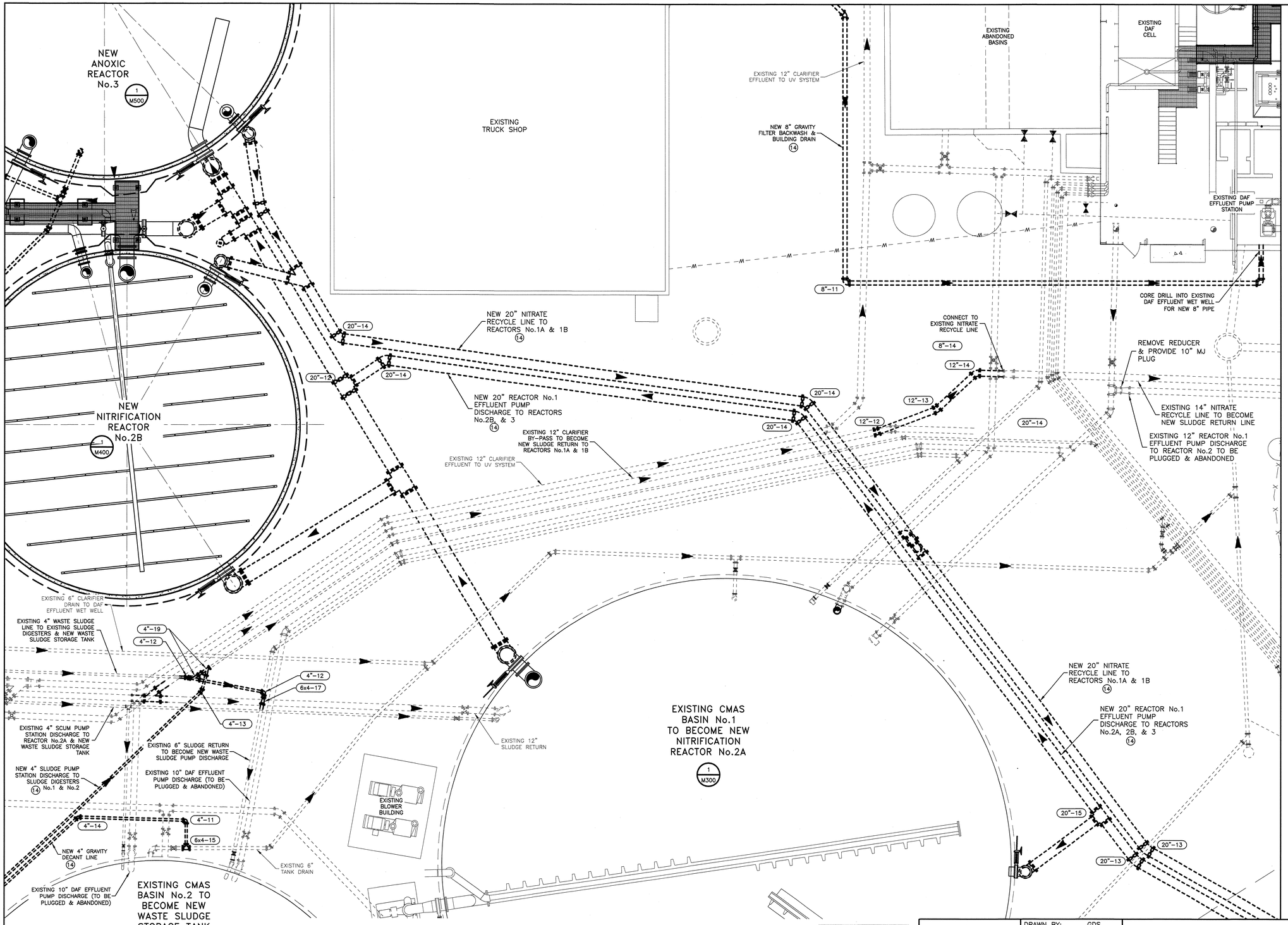

NO.	BY	CHKD	APRV	REVISION	DATE

NOTES:

1. THE CONTRACTOR SHALL CONTACT "MISS UTILITY" OF DELMARVA 1-800-282-8555 PRIOR TO PERFORMING ANY EARTHWORK ACTIVITIES AND COMPLY WITH ALL LOCAL AND STATE LAWS AND REGULATIONS PERTAINING TO EXCAVATION.

2. CONTRACTOR SHALL MAINTAIN A MINIMUM VERTICAL SEPARATION OF 6" BETWEEN ALL PIPES. MINIMUM CLEAR VERTICAL SEPARATION BETWEEN POTABLE WATER LINES AND SEWER LINES SHALL BE 18", OR CONCRETE ENCASEMENT. IF NOT POSSIBLE (6" MINIMUM CONCRETE ALL AROUND PIPE).

3. MINIMUM PIPE COVER SHALL BE 24" UNLESS OTHERWISE NOTED.

4. THE CONTRACTOR SHALL BE RESPONSIBLE FOR NOTIFYING THE OWNER AND THE ENGINEER OF ANY CHANGES OF CONDITIONS ATTACHED TO PERMITS OBTAINED FROM THE AUTHORITY ISSUING PERMITS.

5. REID ENGINEERING COMPANY DOES NOT CERTIFY TO THE LOCATION OF OR THE EXISTENCE OF ANY EXISTING UNDERGROUND UTILITIES. THE UNDERGROUND UTILITIES SHOWN HERON ARE BASED UPON AVAILABLE RECORDS. THIS DOES NOT CONSTITUTE A GUARANTEE OF THEIR ACTUAL LOCATIONS OR THAT THEY HAVE ALL BEEN SHOWN.

6. THE CONTRACTOR SHALL BE RESPONSIBLE FOR THE DIGGING OF TEST HOLES PRIOR TO BEGINNING ANY CONSTRUCTION OR ORDERING PIPE MATERIALS. THESE TEST HOLES WILL BE MADE TO VERIFY ALL CROSSINGS BETWEEN NEW AND EXISTING UTILITIES AND AT CRITICAL GRADE CHANGES. IF CONDITIONS ARE FOUND IN THE FIELD WHICH ARE MATERIALLY DIFFERENT FROM THE PLANS THE CONTRACTOR SHALL NOTIFY THE OWNER AND REID ENGINEERING COMPANY IMMEDIATELY.

7. THE CONTRACTOR SHALL MAINTAIN AS-BUILTS ON SITE OF THE INSTALLED PIPE LOCATIONS. AS-BUILT INFORMATION SHALL INCLUDE HORIZONTAL AND VERTICAL INFORMATION ON ALL UNDERGROUND PIPE FITTINGS AND AT ALL HIGH AND LOW POINTS IN THE PIPE PROFILES. CONTRACTOR SHALL SUBMIT AS-BUILT INFORMATION TO REID ENGINEERING FOR THE PREPARATION OF PROJECT RECORD DRAWINGS.

8. REFER TO MECHANICAL "M" SHEETS FOR ADDITIONAL INFORMATION AND PIPING DETAILS.

9. REFER TO STRUCTURAL "S" SHEETS FOR FOUNDATION INFORMATION AND DETAILS.

10. REFER TO "D" SHEETS FOR ALL GENERAL PIPING NOTES, DETAILS, CALLOUTS, RESTRAINED JOINTS, AND BEDDING REQUIREMENTS.

LEGEND

FITTING SIZE — (8"-04) — FITTING TYPE

PIPE SIZE — 8" (1) — PIPE TYPE

VALVE SIZE — 8" (F) — VALVE TYPE

(SEE SHEET D100 FOR SCHEDULES & DESCRIPTIONS)

DETAIL NUMBER — 2 / 2 — SHEET DETAIL IS DRAWN ON

SECTION NUMBER — 2 / 2 — SHEET SECTION IS DRAWN ON

GRAPHIC SCALE

20 0 10 20 40

811 Know what's below. Call before you dig.

JOHN HAGER REID LICENSE No. 6580 PROFESSIONAL ENGINEER DELAWARE

11/23/15

John H. Reid P.E.

DRAWN BY:	GDS
DESIGNED BY:	JHR
CHKD BY:	AEZ

THE INFORMATION CONTAINED HEREIN SHALL BE CONSIDERED PROPRIETARY TO REID ENGINEERING COMPANY, INC. ANY USE OR RE-PRODUCTION OF THIS INFORMATION WITHOUT THE EXPRESS WRITTEN CONSENT FROM REID ENGINEERING COMPANY, INC. IS HEREBY PROHIBITED.

REID ENGINEERING COMPANY, INC.

1210 Princess Anne Street
Fredericksburg, Virginia 22401
Tel:(540) 371-8500 Fax:(540) 371-8576

UNDERGROUND PIPING PLAN
AREA ENLARGEMENT

ALLEN HARIM, LLC
PHASE TWO
WASTEWATER TREATMENT SYSTEM
UPGRADE & EXPANSION

HARBESON, DELAWARE

DATE:	11-23-15	PROJECT NO.	AH02A
SCALE:	1/8"=1'-0"	DWG NO:	C203

© COPYRIGHT 2015 - REID ENGINEERING COMPANY, INC.

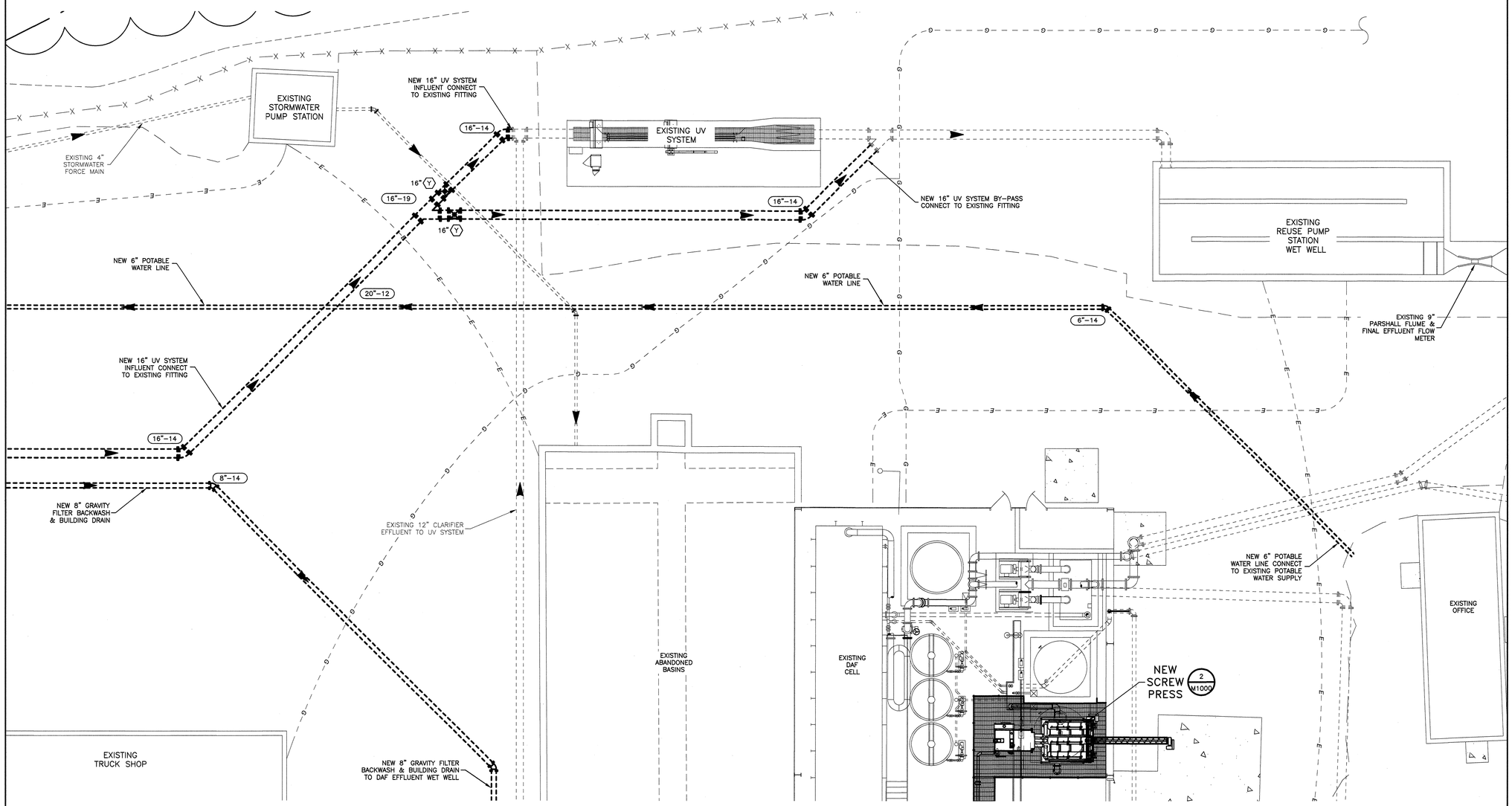

NO.	BY	CHKD	APRV	REVISION	DATE

NOTES:

1. THE CONTRACTOR SHALL CONTACT "MISS UTILITY" OF DELMARVA 1-800-282-8555 PRIOR TO PERFORMING ANY EARTHWORK ACTIVITIES AND COMPLY WITH ALL LOCAL AND STATE LAWS AND REGULATIONS PERTAINING TO EXCAVATION.

2. CONTRACTOR SHALL MAINTAIN A MINIMUM VERTICAL SEPARATION OF 6" BETWEEN ALL PIPES. MINIMUM CLEAR VERTICAL SEPARATION BETWEEN POTABLE WATER LINES AND SEWER LINES SHALL BE 18", OR CONCRETE ENCASEMENT. IF NOT POSSIBLE (6" MINIMUM CONCRETE ALL AROUND PIPE).

3. MINIMUM PIPE COVER SHALL BE 24" UNLESS OTHERWISE NOTED.

4. THE CONTRACTOR SHALL BE RESPONSIBLE FOR NOTIFYING THE OWNER AND THE ENGINEER OF ANY CHANGES OF CONDITIONS ATTACHED TO PERMITS OBTAINED FROM THE AUTHORITY ISSUING PERMITS.

5. REID ENGINEERING COMPANY DOES NOT CERTIFY TO THE LOCATION OF OR THE EXISTENCE OF ANY EXISTING UNDERGROUND UTILITIES. THE UNDERGROUND UTILITIES SHOWN HERON ARE BASED UPON AVAILABLE RECORDS. THIS DOES NOT CONSTITUTE A GUARANTEE OF THEIR ACTUAL LOCATIONS OR THAT THEY HAVE ALL BEEN SHOWN.

6. THE CONTRACTOR SHALL BE RESPONSIBLE FOR THE DIGGING OF TEST HOLES PRIOR TO BEGINNING ANY CONSTRUCTION OR ORDERING PIPE MATERIALS. THESE TEST HOLES WILL BE MADE TO VERIFY ALL CROSSINGS BETWEEN NEW AND EXISTING UTILITIES AND AT CRITICAL GRADE CHANGES. IF CONDITIONS ARE FOUND IN THE FIELD WHICH ARE MATERIALLY DIFFERENT FROM THE PLANS THE CONTRACTOR SHALL NOTIFY THE OWNER AND REID ENGINEERING COMPANY IMMEDIATELY.

7. THE CONTRACTOR SHALL MAINTAIN AS-BUILTS ON SITE OF THE INSTALLED PIPE LOCATIONS. AS-BUILT INFORMATION SHALL INCLUDE HORIZONTAL AND VERTICAL INFORMATION ON ALL UNDERGROUND PIPE FITTINGS AND AT ALL HIGH AND LOW POINTS IN THE PIPE PROFILES. CONTRACTOR SHALL SUBMIT AS-BUILT INFORMATION TO REID ENGINEERING FOR THE PREPARATION OF PROJECT RECORD DRAWINGS.

8. REFER TO MECHANICAL "M" SHEETS FOR ADDITIONAL INFORMATION AND PIPING DETAILS.

9. REFER TO STRUCTURAL "S" SHEETS FOR FOUNDATION INFORMATION AND DETAILS.

10. REFER TO "D" SHEETS FOR ALL GENERAL PIPING NOTES, DETAILS, CALLOUTS, RESTRAINED JOINTS, AND BEDDING REQUIREMENTS.

LEGEND

FITTING SIZE — 8"-04 — FITTING TYPE

PIPE SIZE — 8" (14) — PIPE TYPE

VALVE SIZE — 8" (F) — VALVE TYPE

(SEE SHEET D100 FOR SCHEDULES & DESCRIPTIONS)

DETAIL NUMBER — 2 / 2 — SHEET DETAIL IS DRAWN ON

SECTION NUMBER — 2 / 2 — SHEET SECTION IS DRAWN ON

GRAPHIC SCALE

20 0 10 20 40

811 Know what's below. Call before you dig.

JOHN HAGER REID LICENSE No. 8580 DELAWARE PROFESSIONAL ENGINEER

11/23/15

John H. Reid P.E.

DRAWN BY:	GDS
DESIGNED BY:	JHR
CHKD BY:	AEZ

THE INFORMATION CONTAINED HEREIN SHALL BE CONSIDERED PROPRIETARY TO REID ENGINEERING COMPANY, INC. ANY USE OR REPRODUCTION OF THIS INFORMATION WITHOUT THE EXPRESS WRITTEN CONSENT FROM REID ENGINEERING COMPANY, INC. IS HEREBY PROHIBITED.

REID ENGINEERING COMPANY, INC.

1210 Princess Anne Street
Fredericksburg, Virginia 22401
Tel:(540) 371-8500 Fax:(540) 371-8576

UNDERGROUND PIPING PLAN
AREA ENLARGEMENT

ALLEN HARIM, LLC
PHASE TWO
WASTEWATER TREATMENT SYSTEM
UPGRADE & EXPANSION

HARBESON, DELAWARE

DATE:	11-23-15	PROJECT NO.	AH02A
SCALE:	1/8"=1'-0"	DWG NO:	C204

© COPYRIGHT 2015 - REID ENGINEERING COMPANY, INC.

NO.	BY	CHKD	APRV	REVISION	DATE

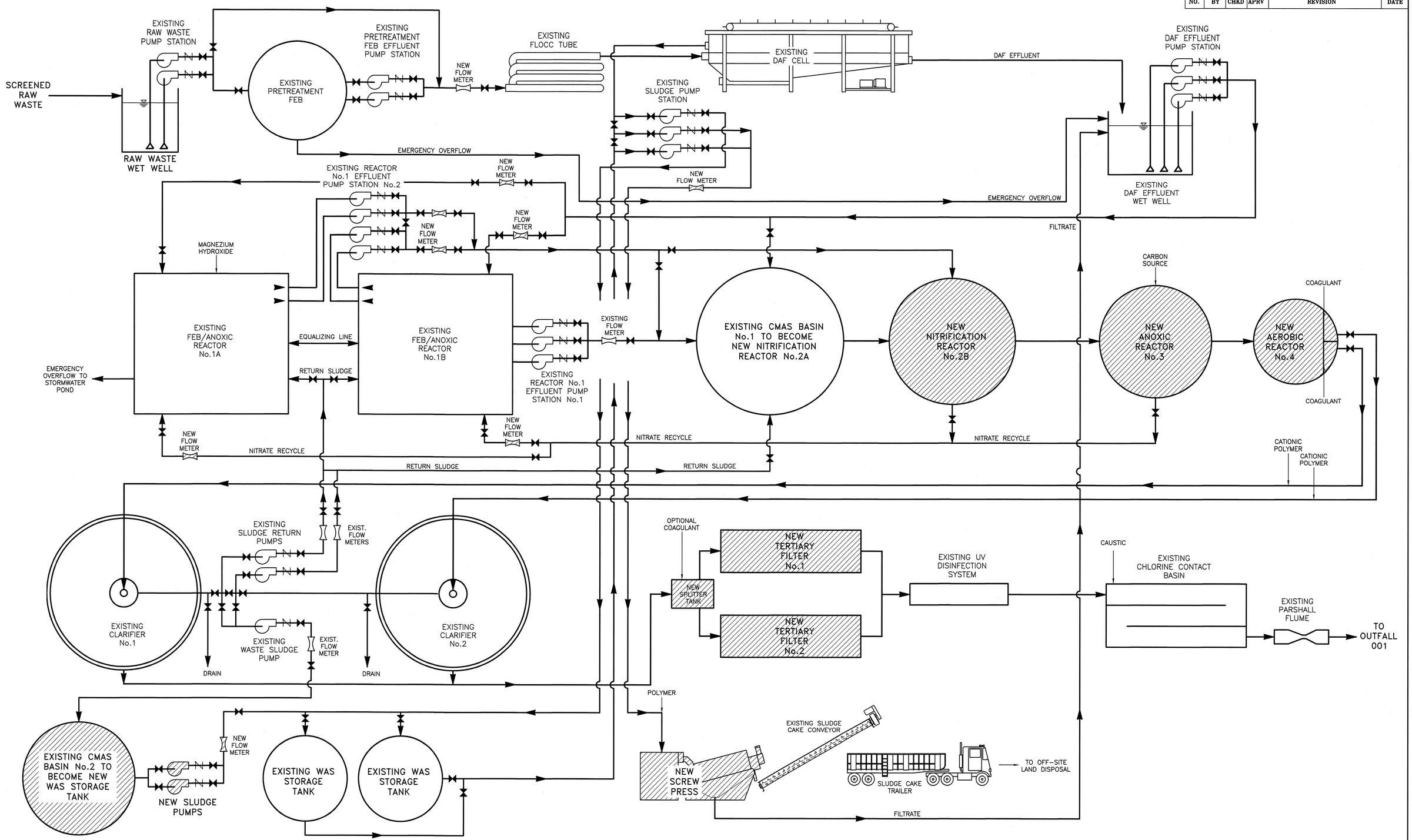

© COPYRIGHT 2015 – REID ENGINEERING COMPANY, INC.

JOHN HAGER REID LICENSE No. 6580 DELAWARE PROFESSIONAL ENGINEER
John H. Reid P.E.

DRAWN BY:	GDS
DESIGNED BY:	JHR
CHKD BY:	AEZ

THE INFORMATION CONTAINED HEREIN SHALL BE CONSIDERED PROPRIETARY TO REID ENGINEERING COMPANY, INC. ANY USE OR RE-PRODUCTION OF THIS INFORMATION WITHOUT THE EXPRESS WRITTEN CONSENT FROM REID ENGINEERING COMPANY, INC. IS HEREBY PROHIBITED.

REID ENGINEERING COMPANY, INC.
1210 Princess Anne Street
Fredericksburg, Virginia 22401
Tel:(540) 371-8500 Fax:(540) 371-8576

WASTEWATER FLOW SCHEMATIC

ALLEN HARIM FOODS, LLC
PHASE TWO
WASTEWATER TREATMENT SYSTEM
UPGRADE & EXPANSION

HARBESON, DELAWARE

DATE:	11-23-15	PROJECT NO.	AH02A
SCALE:	NONE	DWG NO:	F100

NO.	BY	CHKD	APRV	REVISION	DATE

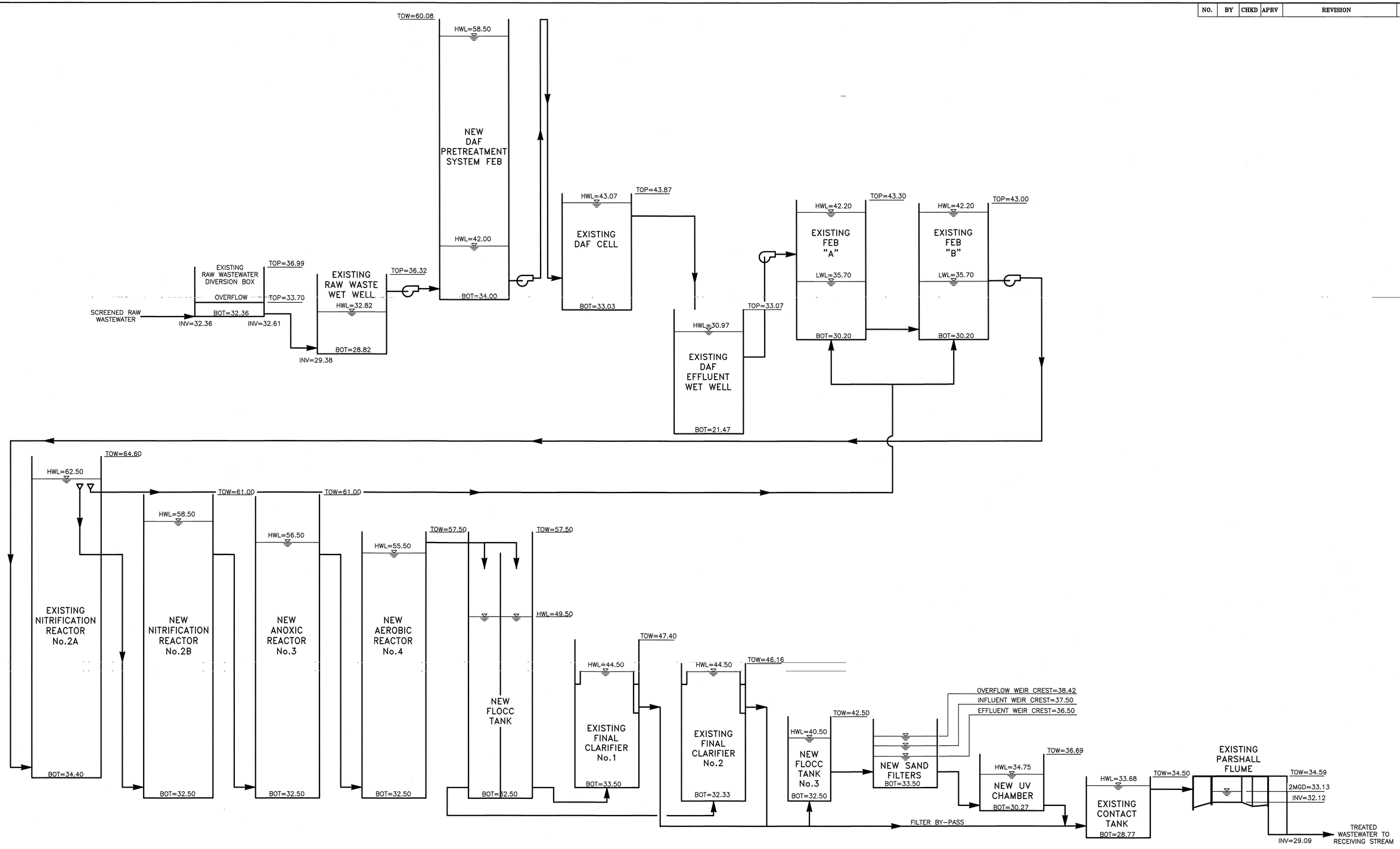

JOHN HAGER REID
LICENSE
No. 6580
PROFESSIONAL ENGINEER
DELAWARE
11/23/15
John H. Reid P.E.

DRAWN BY:	GDS
DESIGNED BY:	JHR
CHKD BY:	AEZ

THE INFORMATION CONTAINED HEREIN SHALL BE CONSIDERED PROPRIETARY TO REID ENGINEERING COMPANY, INC. ANY USE OR REPRODUCTION OF THIS INFORMATION WITHOUT THE EXPRESS WRITTEN CONSENT FROM REID ENGINEERING COMPANY, INC. IS HEREBY PROHIBITED.

REID ENGINEERING COMPANY, INC.
1210 Princess Anne Street
Fredericksburg, Virginia 22401
Tel:(540) 371-8500 Fax:(540) 371-8576

HYDRAULIC PROFILE

ALLEN HARIM FOODS, LLC
PHASE TWO
WASTEWATER TREATMENT SYSTEM
UPGRADE & EXPANSION

HARBESON, DELAWARE

DATE:	11-23-15	PROJECT NO.	AH02A
SCALE: VERT=1/4"=1'-0"		DWG NO:	F101

© COPYRIGHT 2015 – REID ENGINEERING COMPANY, INC.

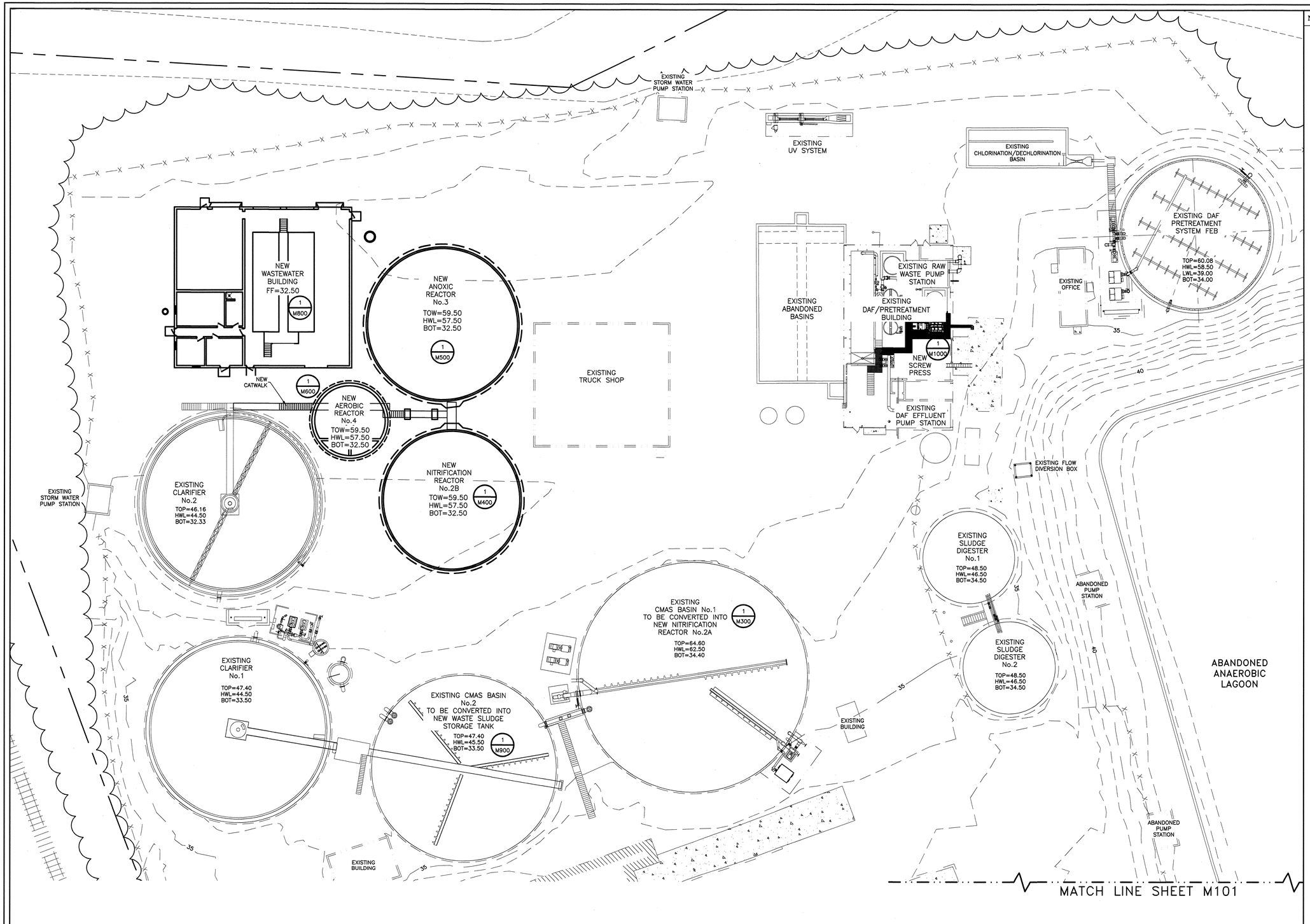

NO.	BY	CHKD	APRV	REVISION	DATE

NOTE:
1. REFER TO "D" SHEETS FOR ALL GENERAL PIPING NOTES, DETAILS, CALLOUTS, AND BEDDING REQUIREMENTS.

LEGEND

- PROPERTY LINE
- ADJOINING PROPERTY LINE
- MAJOR CONTOUR
- MINOR CONTOUR
- EDGE OF PAVEMENT
- EDGE OF GRAVEL
- CURB
- EDGE OF DIRT ROAD
- NEW CONSTRUCTION
- PAVEMENT HATCH
- CONCRETE HATCH
- GRAVEL HATCH
- BUILDING OUTLINE
- RETAINING WALL
- FENCE LINE —X—X—X—
- RAILROAD TRACK
- PIPE
- TREE LINE
- UNDERGROUND WATER PIPE —W—
- UNDERGROUND GAS PIPE —G—
- UNDERGROUND ELECTRIC —E—

LEGEND

DETAIL NUMBER — 2 / 2 — SHEET DETAIL IS DRAWN ON

SECTION NUMBER — 2 / 2 — SHEET SECTION IS DRAWN ON

GRAPHIC SCALE
20 0 10 20 40

JOHN HAGER REID LICENSE No. 6580 PROFESSIONAL ENGINEER
11/23/15
John H. Reid P.E.

DRAWN BY:	GDS
DESIGNED BY:	JHR
CHKD BY:	AEZ

THE INFORMATION CONTAINED HEREIN SHALL BE CONSIDERED PROPRIETARY TO REID ENGINEERING COMPANY, INC. ANY USE OR REPRODUCTION OF THIS INFORMATION WITHOUT THE EXPRESS WRITTEN CONSENT FROM REID ENGINEERING COMPANY, INC. IS HEREBY PROHIBITED.

REID ENGINEERING COMPANY, INC.
1210 Princess Anne Street
Fredericksburg, Virginia 22401
Tel:(540) 371-8500 Fax:(540) 371-8576

SOUTHWEST AREA PLAN
KEY SHEET

ALLEN HARIM FOODS, LLC
PHASE TWO
WASTEWATER TREATMENT SYSTEM
UPGRADE & EXPANSION

HARBESON, DELAWARE

DATE:	11-23-15	PROJECT NO.	AH02A
SCALE:	1"=20'	DWG NO:	M100

© COPYRIGHT 2015 – REID ENGINEERING COMPANY, INC.

NO.	BY	CHKD	APRV	REVISION	DATE

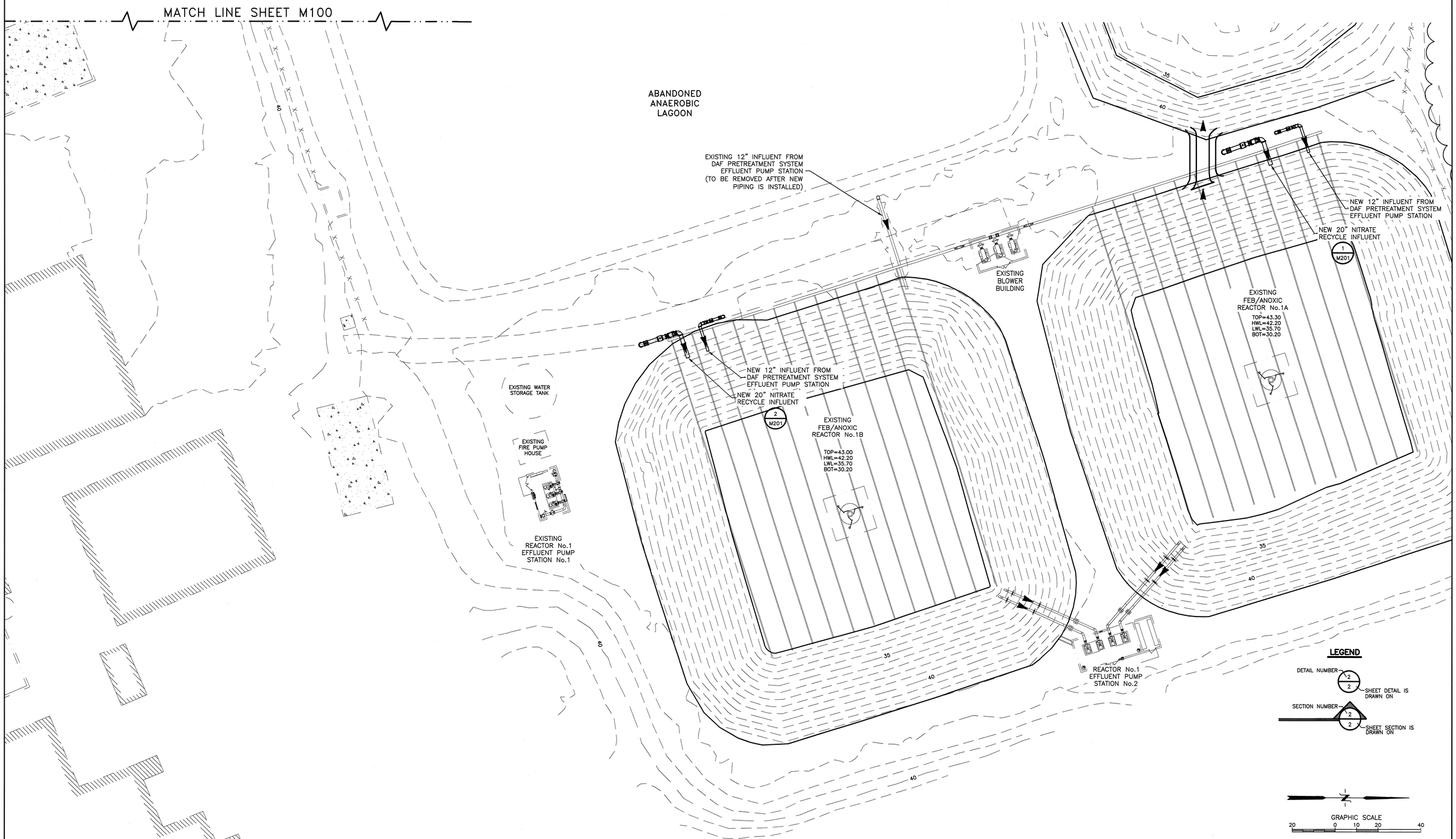

NOTE:
1. REFER TO "D" SHEETS FOR ALL GENERAL PIPING NOTES, DETAILS, CALLOUTS, AND BEDDING REQUIREMENTS.

JOHN HAGER REID LICENSE No. 9580 PROFESSIONAL ENGINEER VIRGINIA
11/23/15
John H. Reid P.E.

DRAWN BY:	GDS
DESIGNED BY:	JHR
CHKD BY:	AEZ

THE INFORMATION CONTAINED HEREIN SHALL BE CONSIDERED PROPRIETARY TO REID ENGINEERING COMPANY, INC. ANY USE OR REPRODUCTION OF THIS INFORMATION WITHOUT THE EXPRESS WRITTEN CONSENT FROM REID ENGINEERING COMPANY, INC. IS HEREBY PROHIBITED.

REID ENGINEERING COMPANY, INC.
1210 Princess Anne Street
Fredericksburg, Virginia 22401
Tel:(540) 371-8500 Fax:(540) 371-8576

NORTHEAST AREA PLAN
KEY SHEET

ALLEN HARIM, LLC
PHASE TWO
WASTEWATER TREATMENT SYSTEM
UPGRADE & EXPANSION

HARBESON, DELAWARE

DATE:	11-23-15	PROJECT NO.	AH01A
SCALE:	1"=20'	DWG NO:	M101

© COPYRIGHT 2015 – REID ENGINEERING COMPANY, INC.

NO.	BY	CHKD	APRV	REVISION	DATE

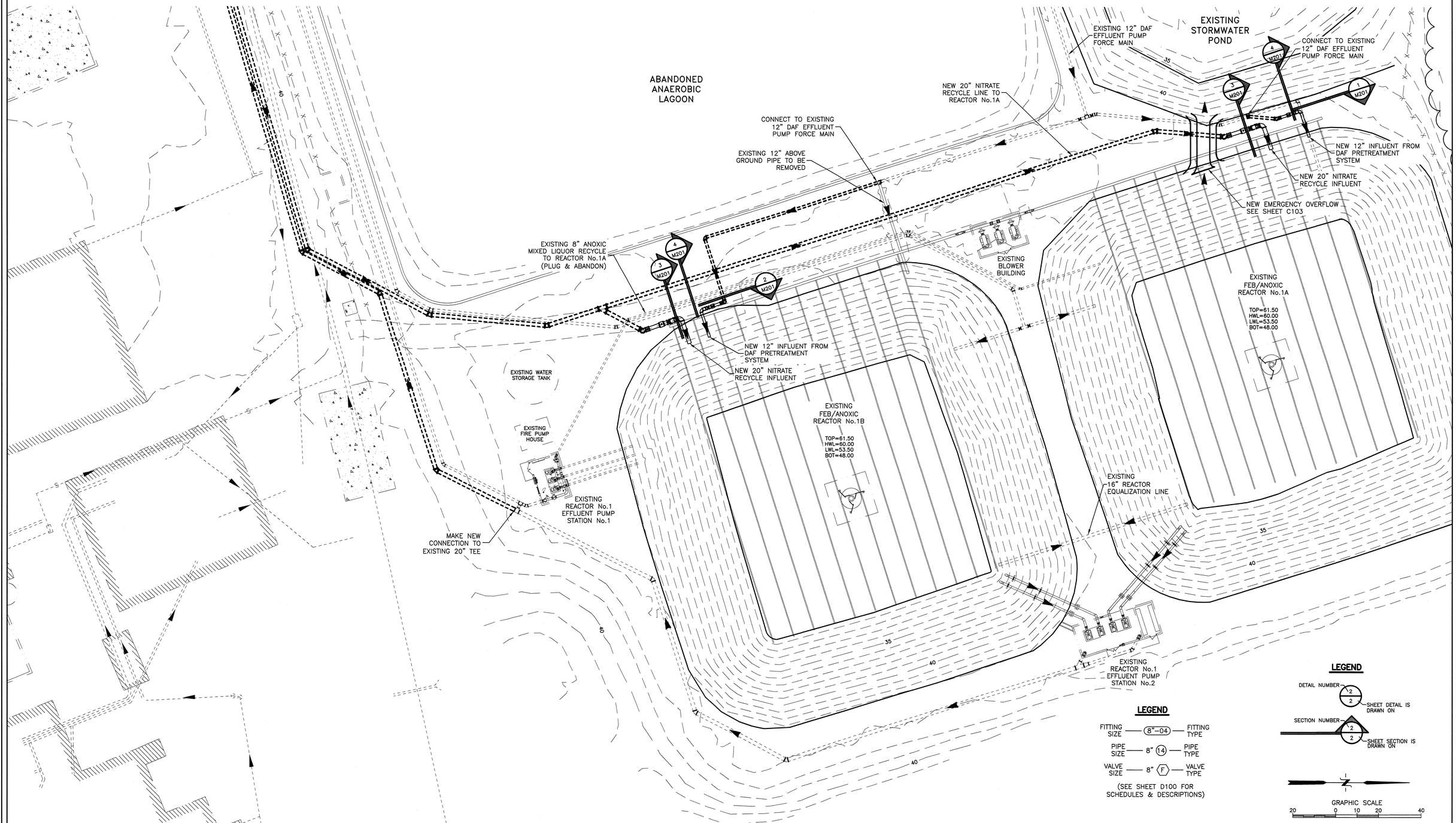

NOTE:
1. REFER TO "D" SHEETS FOR ALL GENERAL PIPING NOTES, DETAILS, CALLOUTS, AND BEDDING REQUIREMENTS.
2. SEE CIVIL PLAN SHEET C202 FOR UNDERGROUND PIPING DETAILS

JOHN HAGER REID LICENSE No. 6580 DELAWARE PROFESSIONAL ENGINEER
11/23/15
John H. Reid P.E.

DRAWN BY:	GDS
DESIGNED BY:	JHR
CHKD BY:	AEZ

THE INFORMATION CONTAINED HEREIN SHALL BE CONSIDERED PROPRIETARY TO REID ENGINEERING COMPANY, INC. ANY USE OR REPRODUCTION OF THIS INFORMATION WITHOUT THE EXPRESS WRITTEN CONSENT FROM REID ENGINEERING COMPANY, INC. IS HEREBY PROHIBITED.

REID ENGINEERING COMPANY, INC.
1210 Princess Anne Street
Fredericksburg, Virginia 22401
Tel:(540) 371–8500 Fax:(540) 371–8576

FEB/ANOXIC REACTOR PIPING PLAN

ALLEN HARIM, LLC
PHASE TWO
WASTEWATER TREATMENT SYSTEM
UPGRADE & EXPANSION

HARBESON, DELAWARE

DATE:	11–23–15	PROJECT NO.	AH01A
SCALE:	1"=20'	DWG NO:	M200

© COPYRIGHT 2015 – REID ENGINEERING COMPANY, INC.

NO.	BY	CHKD	APRV	REVISION	DATE

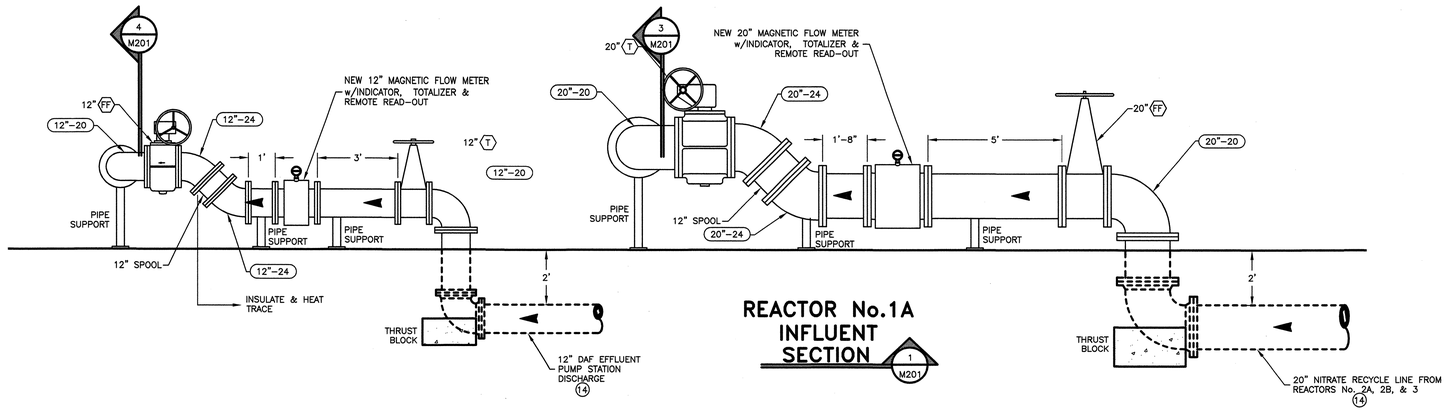

REACTOR No.1A INFLUENT SECTION

1 M201

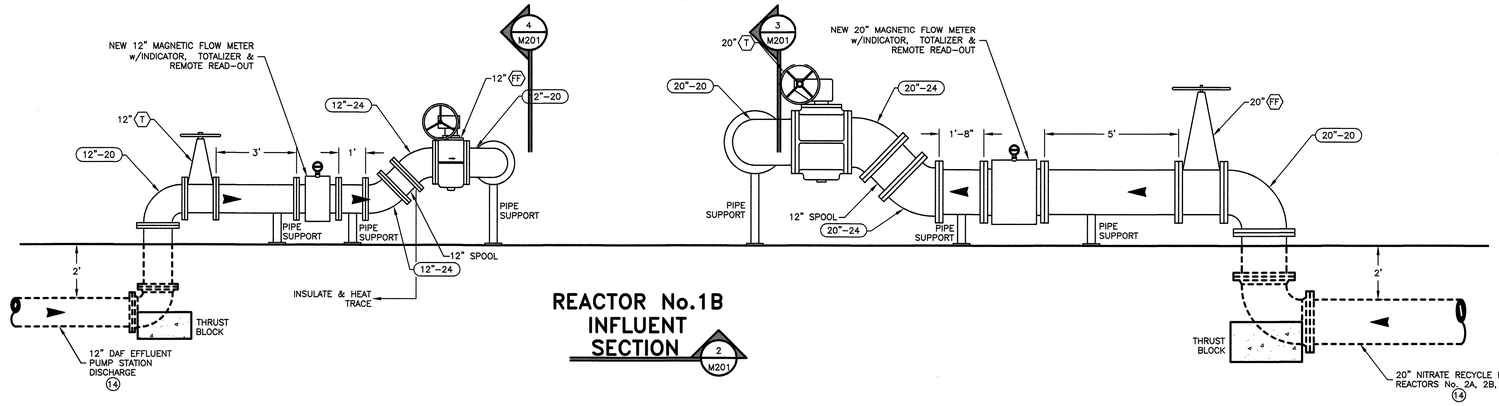

REACTOR No.1B INFLUENT SECTION

2 M201

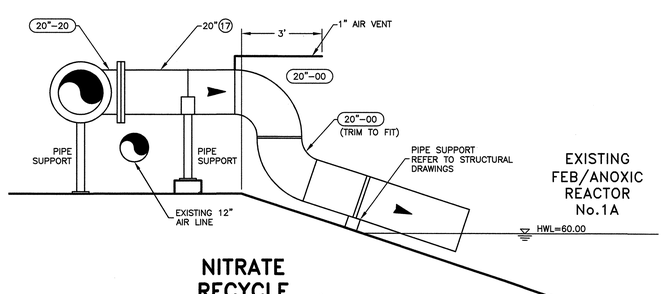

NITRATE RECYCLE SECTION

3 M201

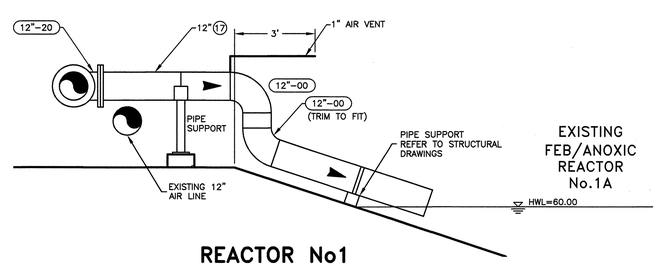

REACTOR No1 INFLUENT SECTION

4 M201

NOTE:
1. REFER TO "D" SHEETS FOR ALL GENERAL PIPING NOTES, DETAILS, CALLOUTS, AND BEDDING REQUIREMENTS.

3' 2' 1' 0 3'
SCALE=3/8"=1'-0"

© COPYRIGHT 2015 – REID ENGINEERING COMPANY, INC.

JOHN HAGER REID LICENSE No. 6580 PROFESSIONAL ENGINEER DELAWARE
11/23/15
John H. Reid P.E.

DRAWN BY:	GDS
DESIGNED BY:	JHR
CHKD BY:	AEZ

THE INFORMATION CONTAINED HEREIN SHALL BE CONSIDERED PROPRIETARY TO REID ENGINEERING COMPANY, INC. ANY USE OR REPRODUCTION OF THIS INFORMATION WITHOUT THE EXPRESS WRITTEN CONSENT FROM REID ENGINEERING COMPANY, INC. IS HEREBY PROHIBITED.

REID ENGINEERING COMPANY, INC.
1210 Princess Anne Street
Fredericksburg, Virginia 22401
Tel:(540) 371-8500 Fax:(540) 371-8576

NITRATE RECYCLE & REACTOR No.1 INFLUENT SECTIONS

ALLEN HARIM FOODS, LLC
PHASE TWO
WASTEWATER TREATMENT SYSTEM
UPGRADE & EXPANSION

HARBESON, DELAWARE

DATE:	11-23-15	PROJECT NO.	AH02A
SCALE:	3/8"=1'-0"	DWG NO:	M201

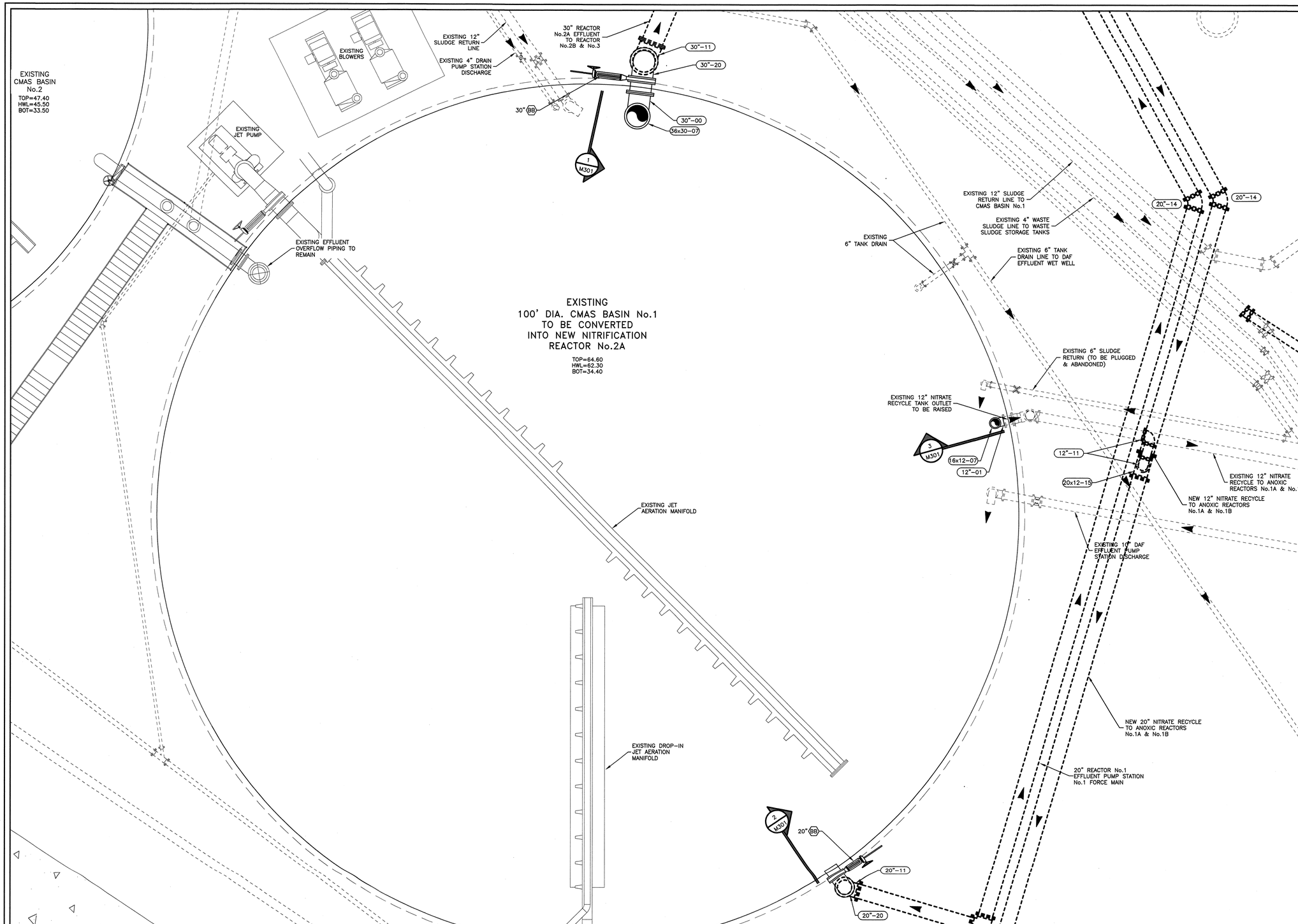

NO.	BY	CHKD	APRV	REVISION	DATE

NOTES:

1. REFER TO "D" SHEETS FOR ALL GENERAL PIPING NOTES, DETAILS, CALLOUTS, AND BEDDING REQUIREMENTS.
2. THE CONTRACTOR SHALL BE RESPONSIBLE FOR THE DIGGING OF TEST HOLES PRIOR TO BEGINNING ANY CONSTRUCTION OR ORDERING PIPE MATERIALS. THESE TEST HOLES WILL BE MADE TO VERIFY ALL CROSSINGS BETWEEN NEW AND EXISTING UTILITIES AND AT CRITICAL GRADE CHANGES. IF CONDITIONS ARE FOUND IN THE FIELD WHICH ARE MATERIALLY DIFFERENT FROM THE PLANS THE CONTRACTOR SHALL NOTIFY THE OWNER AND REID ENGINEERING COMPANY IMMEDIATELY.

LEGEND

FITTING SIZE — 8"-04 — FITTING TYPE

PIPE SIZE — 8" 14 — PIPE TYPE

VALVE SIZE — 8" F — VALVE TYPE

(SEE SHEET D100 FOR SCHEDULES & DESCRIPTIONS)

DETAIL NUMBER — 2 / 2 — SHEET DETAIL IS DRAWN ON

SECTION NUMBER — 2 / 2 — SHEET SECTION IS DRAWN ON

6' 4' 2' 0 6'

SCALE: 3/16"=1'-0"

© COPYRIGHT 2015 – REID ENGINEERING COMPANY, INC.

JOHN HAGER REID LICENSE No. 6580 DELAWARE PROFESSIONAL ENGINEER
11/23/15
John H. Reid P.E.

DRAWN BY:	GDS
DESIGNED BY:	JHR
CHKD BY:	AEZ

THE INFORMATION CONTAINED HEREIN SHALL BE CONSIDERED PROPRIETARY TO REID ENGINEERING COMPANY, INC. ANY USE OR RE-PRODUCTION OF THIS INFORMATION WITHOUT THE EXPRESS WRITTEN CONSENT FROM REID ENGINEERING COMPANY, INC. IS HEREBY PROHIBITED.

REID ENGINEERING COMPANY, INC.
1210 Princess Anne Street
Fredericksburg, Virginia 22401
Tel:(540) 371-8500 Fax:(540) 371-8576

NITRIFICATION REACTOR No.2A PLAN

ALLEN HARIM FOODS, LLC
PHASE TWO
WASTEWATER TREATMENT SYSTEM
UPGRADE & EXPANSION

HARBESON, DELAWARE

DATE:	11-23-15	PROJECT NO.	AH02A
SCALE:	3/16"=1'-0"	DWG NO:	M300

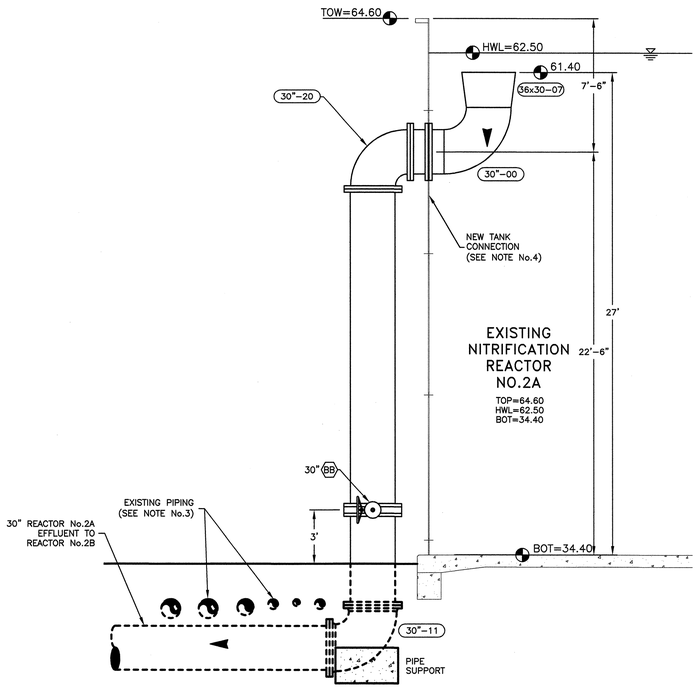

SECTION 1 / M301

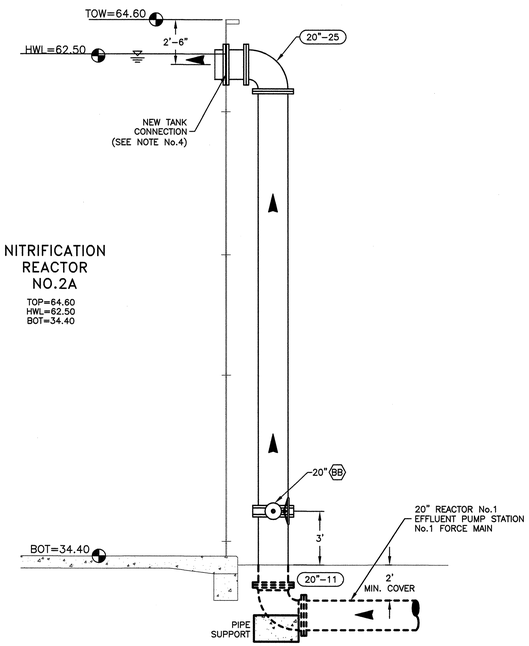

SECTION 2 / M301

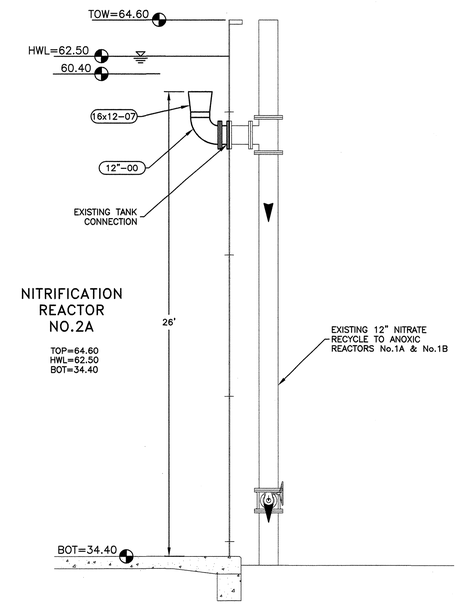

SECTION 3 / M301

NO.	BY	CHKD	APRV	REVISION	DATE

NOTES:

1. REFER TO "D" SHEETS FOR ALL GENERAL PIPING NOTES, DETAILS, CALLOUTS, AND BEDDING REQUIREMENTS.
2. PIPE SUPPORTS ATTACHED TO TANK SIDEWALLS ARE TO BE COORDINATED WITH TANK MANUFACTURER
3. ALL EXISTING PIPES ARE TO BE FIELD LOCATED
4. NEW TANK CONNECTIONS ARE TO BE COORDINATED WITH TANK MANUFACTURER

LEGEND

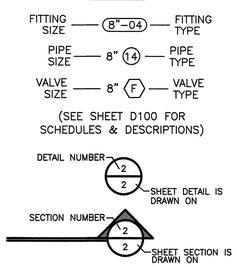

4' 2' 0 4'
SCALE: 1/4"=1'-0"

© COPYRIGHT 2015 – REID ENGINEERING COMPANY, INC.

JOHN HAGER REID LICENSE No. 6580 PROFESSIONAL ENGINEER COMMONWEALTH OF VIRGINIA
11/23/15
John H. Reid P.E.

DRAWN BY:	GDS
DESIGNED BY:	JHR
CHKD BY:	AEZ

THE INFORMATION CONTAINED HEREIN SHALL BE CONSIDERED PROPRIETARY TO REID ENGINEERING COMPANY, INC. ANY USE OR RE-PRODUCTION OF THIS INFORMATION WITHOUT THE EXPRESS WRITTEN CONSENT FROM REID ENGINEERING COMPANY, INC. IS HEREBY PROHIBITED.

REID ENGINEERING COMPANY, INC.
1210 Princess Anne Street
Fredericksburg, Virginia 22401
Tel:(540) 371-8500 Fax:(540) 371-8576

NITRIFICATION REACTOR No.2A
SECTIONS & DETAILS

ALLEN HARIM FOODS, LLC
PHASE TWO
WASTEWATER TREATMENT SYSTEM
UPGRADE & EXPANSION

HARBESON, DELAWARE

DATE:	11-23-15	PROJECT NO.	AH02A
SCALE:	1/4"=1'-0"	DWG NO:	M301

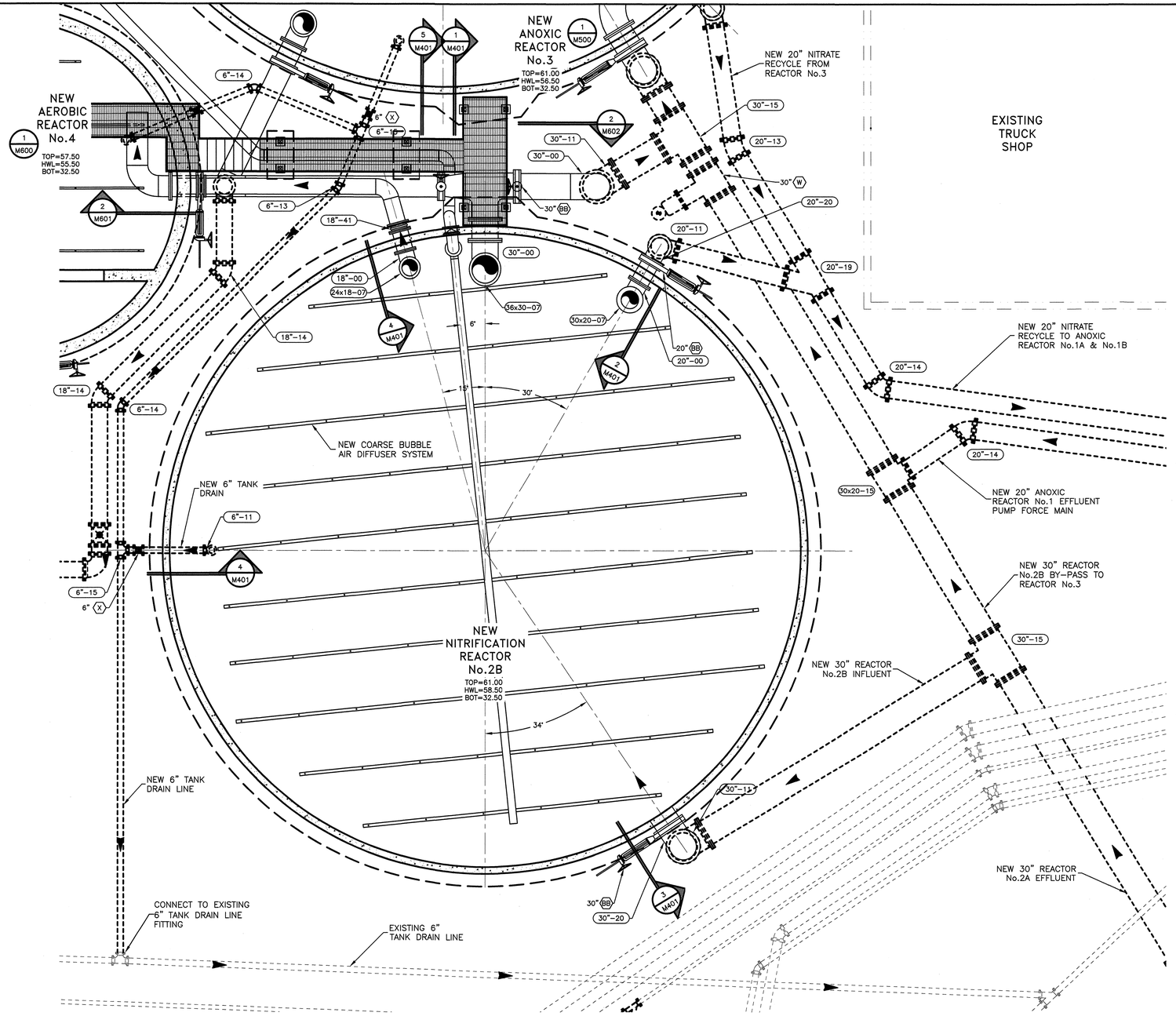

NO.	BY	CHKD	APRV	REVISION	DATE

NOTES:

1. THE CONTRACTOR SHALL BE RESPONSIBLE FOR THE DIGGING OF TEST HOLES PRIOR TO BEGINNING ANY CONSTRUCTION OR ORDERING PIPE MATERIALS. THESE TEST HOLES WILL BE MADE TO VERIFY ALL CROSSINGS BETWEEN NEW AND EXISTING UTILITIES AND AT CRITICAL GRADE CHANGES. IF CONDITIONS ARE FOUND IN THE FIELD WHICH ARE MATERIALLY DIFFERENT FROM THE PLANS THE CONTRACTOR SHALL NOTIFY THE OWNER AND REID ENGINEERING COMPANY IMMEDIATELY.

2. REFER TO "D" SHEETS FOR ALL GENERAL PIPING NOTES, DETAILS, CALLOUTS, RESTRAINED JOINTS, AND BEDDING REQUIREMENTS.

LEGEND

FITTING SIZE — (8"–04) — FITTING TYPE

PIPE SIZE — 8" (14) — PIPE TYPE

VALVE SIZE — 8" (F) — VALVE TYPE

(SEE SHEET D100 FOR SCHEDULES & DESCRIPTIONS)

DETAIL NUMBER — 2/2 — SHEET DETAIL IS DRAWN ON

SECTION NUMBER — 2/2 — SHEET SECTION IS DRAWN ON

6' 4' 2' 0 6'

SCALE: 3/16"=1'-0"

© COPYRIGHT 2015 – REID ENGINEERING COMPANY, INC.

JOHN HAGER REID LICENSE No. 6580 PROFESSIONAL ENGINEER COMMONWEALTH OF VIRGINIA
11/23/15
John H. Reid P.E.

DRAWN BY:	GDS
DESIGNED BY:	JHR
CHKD BY:	AEZ

THE INFORMATION CONTAINED HEREIN SHALL BE CONSIDERED PROPRIETARY TO REID ENGINEERING COMPANY, INC. ANY USE OR RE-PRODUCTION OF THIS INFORMATION WITHOUT THE EXPRESS WRITTEN CONSENT FROM REID ENGINEERING COMPANY, INC. IS HEREBY PROHIBITED.

REID ENGINEERING COMPANY, INC.
1210 Princess Anne Street
Fredericksburg, Virginia 22401
Tel:(540) 371-8500 Fax:(540) 371-8576

NITRIFICATION REACTOR No.2B
PLAN

ALLEN HARIM FOODS, LLC
PHASE TWO
WASTEWATER TREATMENT SYSTEM
UPGRADE & EXPANSION

HARBESON, DELAWARE

DATE:	11-23-15	PROJECT NO.	AH02A
SCALE:	3/16"=1'-0"	DWG NO:	M400

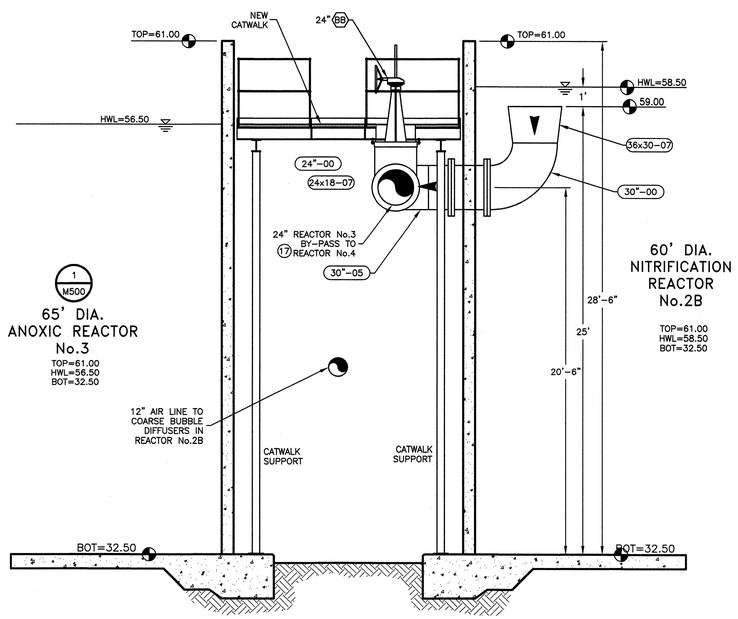

SECTION 1 M401

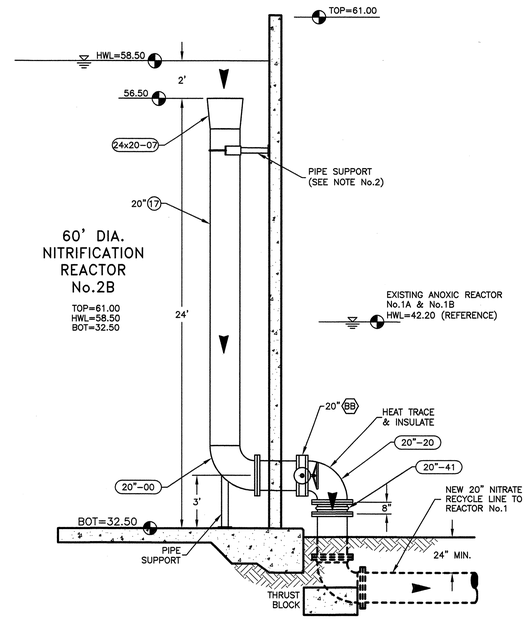

SECTION 2 M401

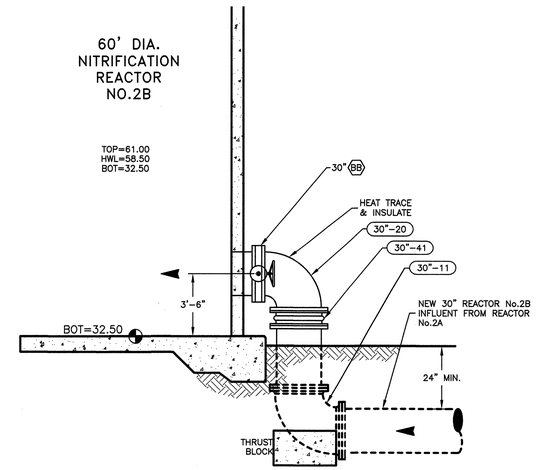

SECTION 3 M401

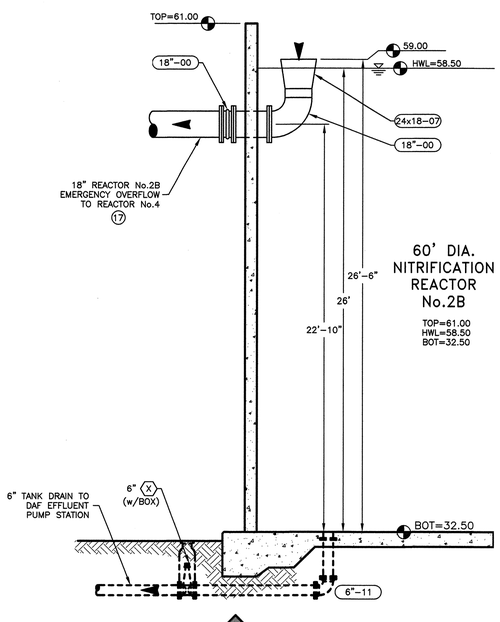

SECTION 4 M401

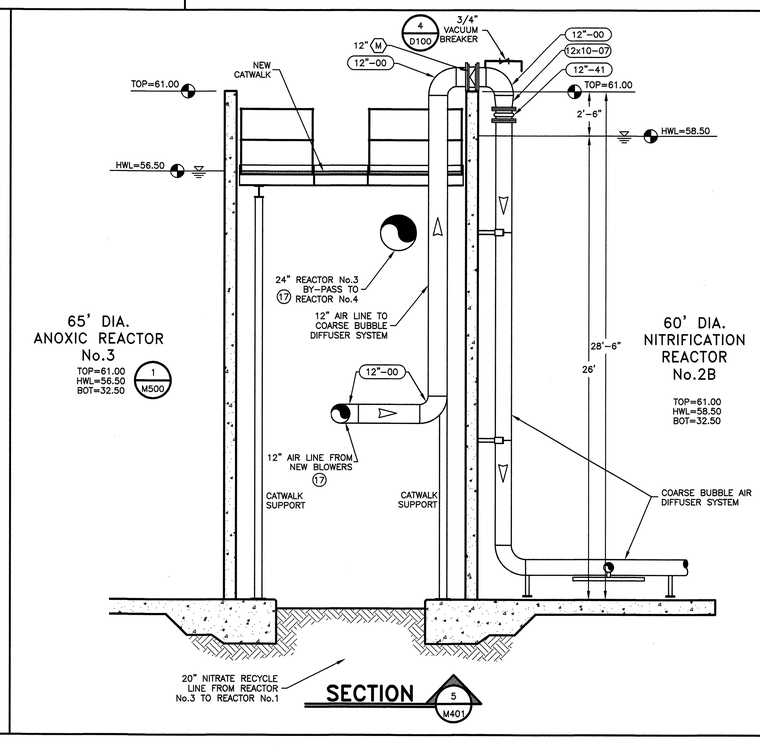

SECTION 5 M401

NO.	BY	CHKD	APRV	REVISION	DATE

NOTES:
1. REFER TO "D" SHEETS FOR ALL GENERAL PIPING NOTES, DETAILS, CALLOUTS, AND BEDDING REQUIREMENTS.
2. PIPE SUPPORTS ATTACHED TO TANK SIDEWALLS ARE TO BE COORDINATED WITH TANK MANUFACTURER

LEGEND

FITTING SIZE — (8"-04) — FITTING TYPE
PIPE SIZE — 8" (14) — PIPE TYPE
VALVE SIZE — 8" (F) — VALVE TYPE
(SEE SHEET D100 FOR SCHEDULES & DESCRIPTIONS)

DETAIL NUMBER — 2 / 2 — SHEET DETAIL IS DRAWN ON
SECTION NUMBER — 2 / 2 — SHEET SECTION IS DRAWN ON

4' 2' 0 4'
SCALE: 1/4"=1'-0"

© COPYRIGHT 2015 – REID ENGINEERING COMPANY, INC.

JOHN HAGER REID LICENSE No. 6580 PROFESSIONAL ENGINEER VIRGINIA 11/23/15
John H. Reid P.E.

DRAWN BY:	GDS
DESIGNED BY:	JHR
CHKD BY:	AEZ

THE INFORMATION CONTAINED HEREIN SHALL BE CONSIDERED PROPRIETARY TO REID ENGINEERING COMPANY, INC. ANY USE OR RE-PRODUCTION OF THIS INFORMATION WITHOUT THE EXPRESS WRITTEN CONSENT FROM REID ENGINEERING COMPANY, INC. IS HEREBY PROHIBITED.

REID ENGINEERING COMPANY, INC.
1210 Princess Anne Street
Fredericksburg, Virginia 22401
Tel:(540) 371-8500 Fax:(540) 371-8576

NITRIFICATION REACTOR No.2B
SECTIONS & DETAILS

ALLEN HARIM FOODS, LLC
PHASE TWO
WASTEWATER TREATMENT SYSTEM
UPGRADE & EXPANSION

HARBESON, DELAWARE

DATE:	11-23-15	PROJECT NO.	AH02A
SCALE:	1/4"=1'-0"	DWG NO:	M401

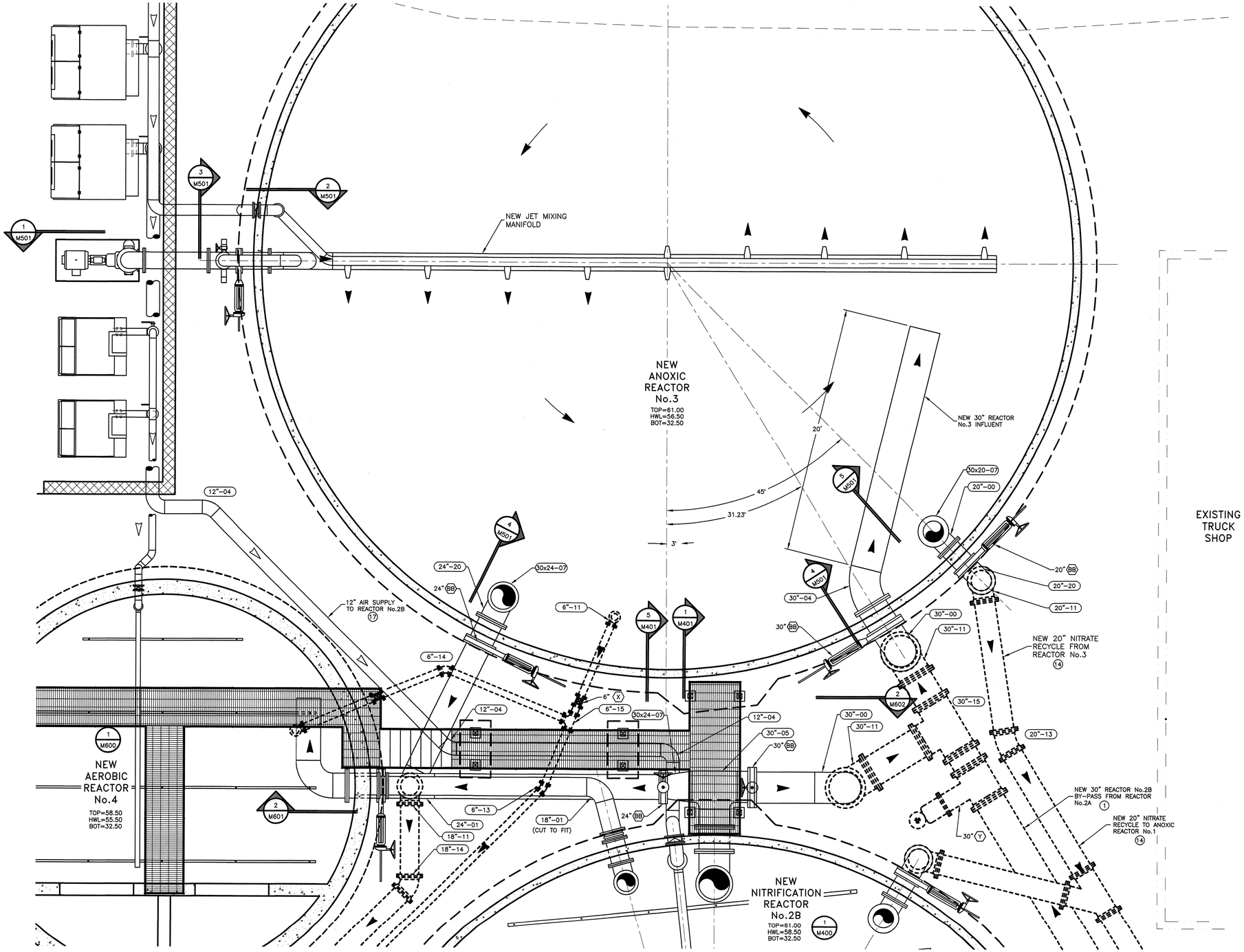

NO.	BY	CHKD	APRV	REVISION	DATE

NOTES:

1. REFER TO "D" SHEETS FOR ALL GENERAL PIPING NOTES, DETAILS, CALLOUTS, AND BEDDING REQUIREMENTS.
2. PIPE SUPPORTS ATTACHED TO TANK SIDEWALLS ARE TO BE COORDINATED WITH TANK MANUFACTURER
3. ALL EXISTING PIPES ARE TO BE FIELD LOCATED
4. NEW TANK CONNECTIONS ARE TO BE COORDINATED WITH TANK MANUFACTURER

LEGEND

FITTING SIZE — (8"–04) — FITTING TYPE

PIPE SIZE — 8" (14) — PIPE TYPE

VALVE SIZE — 8" (F) — VALVE TYPE

(SEE SHEET D100 FOR SCHEDULES & DESCRIPTIONS)

DETAIL NUMBER — 2 / 2 — SHEET DETAIL IS DRAWN ON

SECTION NUMBER — 2 / 2 — SHEET SECTION IS DRAWN ON

6' 4' 2' 0 6'

SCALE: 3/16"=1'–0"

© COPYRIGHT 2015 – REID ENGINEERING COMPANY, INC.

JOHN HAGER REID LICENSE No. 6580 PROFESSIONAL ENGINEER

11/23/15

John H. Reid P.E.

DRAWN BY:	GDS
DESIGNED BY:	JHR
CHKD BY:	AEZ

THE INFORMATION CONTAINED HEREIN SHALL BE CONSIDERED PROPRIETARY TO REID ENGINEERING COMPANY, INC. ANY USE OR RE-PRODUCTION OF THIS INFORMATION WITHOUT THE EXPRESS WRITTEN CONSENT FROM REID ENGINEERING COMPANY, INC. IS HEREBY PROHIBITED.

REID ENGINEERING COMPANY, INC.

1210 Princess Anne Street
Fredericksburg, Virginia 22401
Tel:(540) 371–8500 Fax:(540) 371–8576

ANOXIC REACTOR No.3
PLAN

ALLEN HARIM FOODS, LLC
PHASE TWO
WASTEWATER TREATMENT SYSTEM
UPGRADE & EXPANSION

HARBESON, DELAWARE

DATE:	11–23–15	PROJECT NO.	AH02A
SCALE:	1/4"=1'–0"	DWG NO:	M500

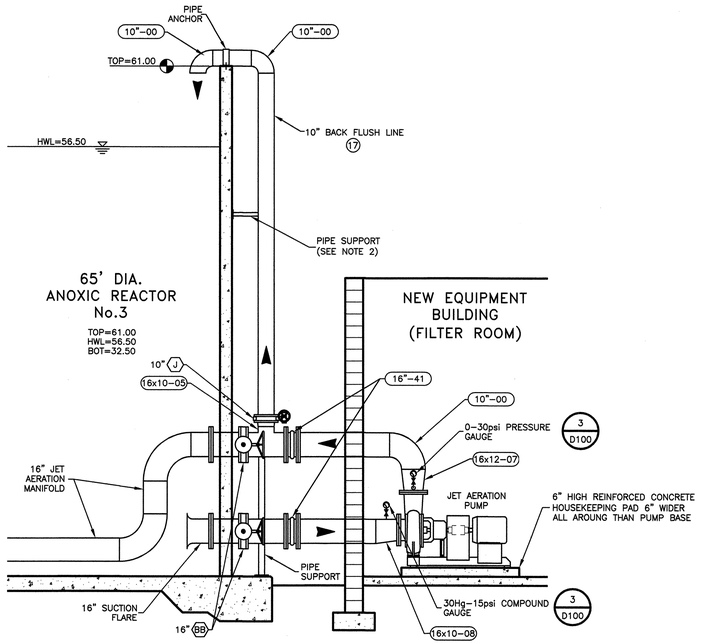

SECTION 1 M501

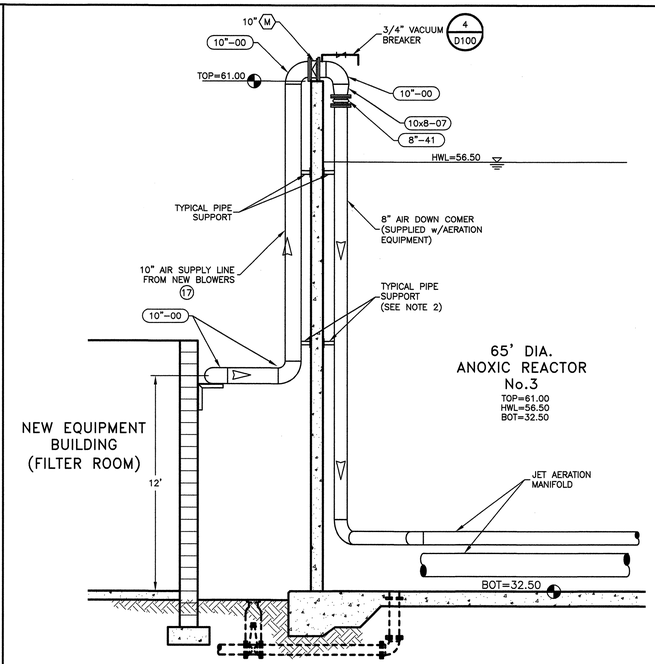

SECTION 2 M501

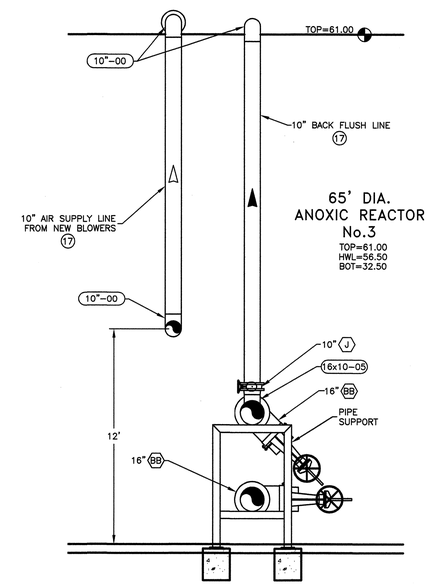

SECTION 3 M501

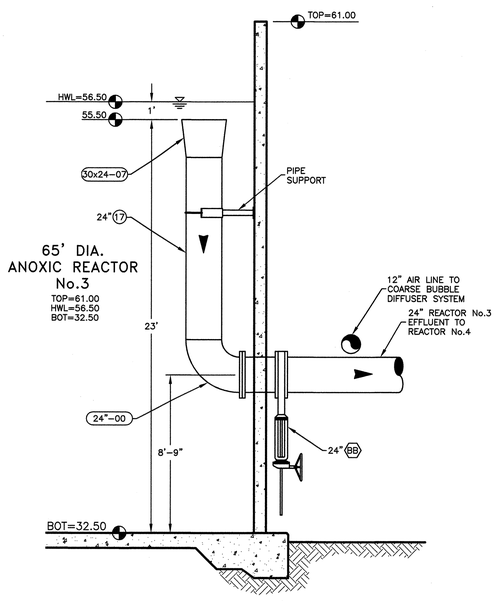

SECTION 4 M501

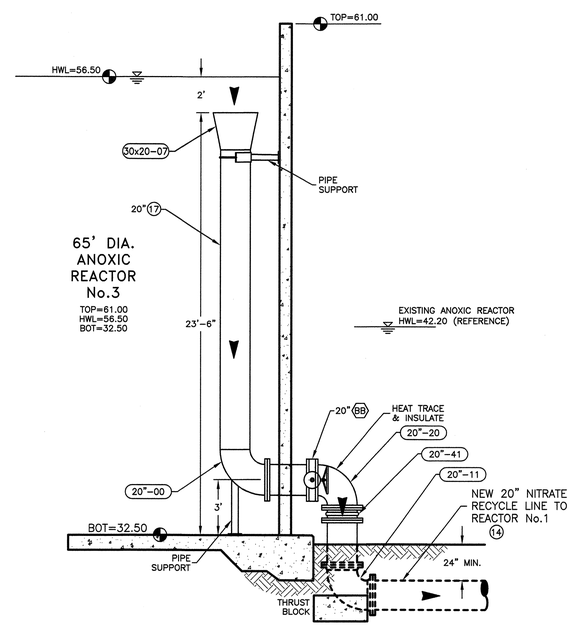

SECTION 5 M501

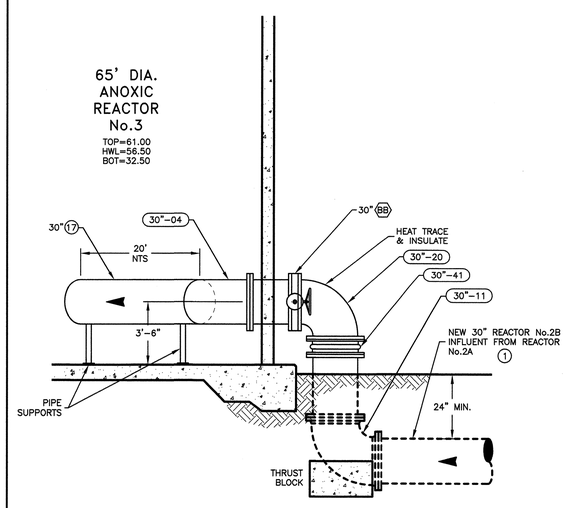

SECTION 6 M501

NO.	BY	CHKD	APRV	REVISION	DATE

NOTES:
1. REFER TO "D" SHEETS FOR ALL GENERAL PIPING NOTES, DETAILS, CALLOUTS, AND BEDDING REQUIREMENTS.
2. PIPE SUPPORTS ATTACHED TO TANK SIDEWALLS ARE TO BE COORDINATED WITH TANK MANUFACTURER
3. ALL EXISTING PIPES ARE TO BE FIELD LOCATED
4. NEW TANK CONNECTIONS ARE TO BE COORDINATED WITH TANK MANUFACTURER

LEGEND

FITTING SIZE — 8"-04 — FITTING TYPE
PIPE SIZE — 8" 14 — PIPE TYPE
VALVE SIZE — 8" F — VALVE TYPE

(SEE SHEET D100 FOR SCHEDULES & DESCRIPTIONS)

DETAIL NUMBER — 2 / 2 — SHEET DETAIL IS DRAWN ON
SECTION NUMBER — 2 / 2 — SHEET SECTION IS DRAWN ON

4' 2' 0 4'
SCALE: 1/4"=1'-0"

REFER TO "D" SHEETS FOR ALL GENERAL PIPING NOTES, DETAILS, CALLOUTS, AND BEDDING REQUIREMENTS.

JOHN HAGER REID LICENSE No. 6580 PROFESSIONAL ENGINEER COMMONWEALTH OF VIRGINIA
11/23/15
John H. Reid P.E.

DRAWN BY:	GDS
DESIGNED BY:	JHR
CHKD BY:	AEZ

THE INFORMATION CONTAINED HEREIN SHALL BE CONSIDERED PROPRIETARY TO REID ENGINEERING COMPANY, INC. ANY USE OR RE-PRODUCTION OF THIS INFORMATION WITHOUT THE EXPRESS WRITTEN CONSENT FROM REID ENGINEERING COMPANY, INC. IS HEREBY PROHIBITED.

REID ENGINEERING COMPANY, INC.
1210 Princess Anne Street
Fredericksburg, Virginia 22401
Tel:(540) 371-8500 Fax:(540) 371-8576

ANOXIC REACTOR No.3
SECTIONS & DETAILS

ALLEN HARIM FOODS, LLC
PHASE TWO
WASTEWATER TREATMENT SYSTEM
UPGRADE & EXPANSION

HARBESON, DELAWARE

DATE:	11-23-15	PROJECT NO.	AH02A
SCALE:	1/4"=1'-0"	DWG NO:	M501

© COPYRIGHT 2015 – REID ENGINEERING COMPANY, INC.

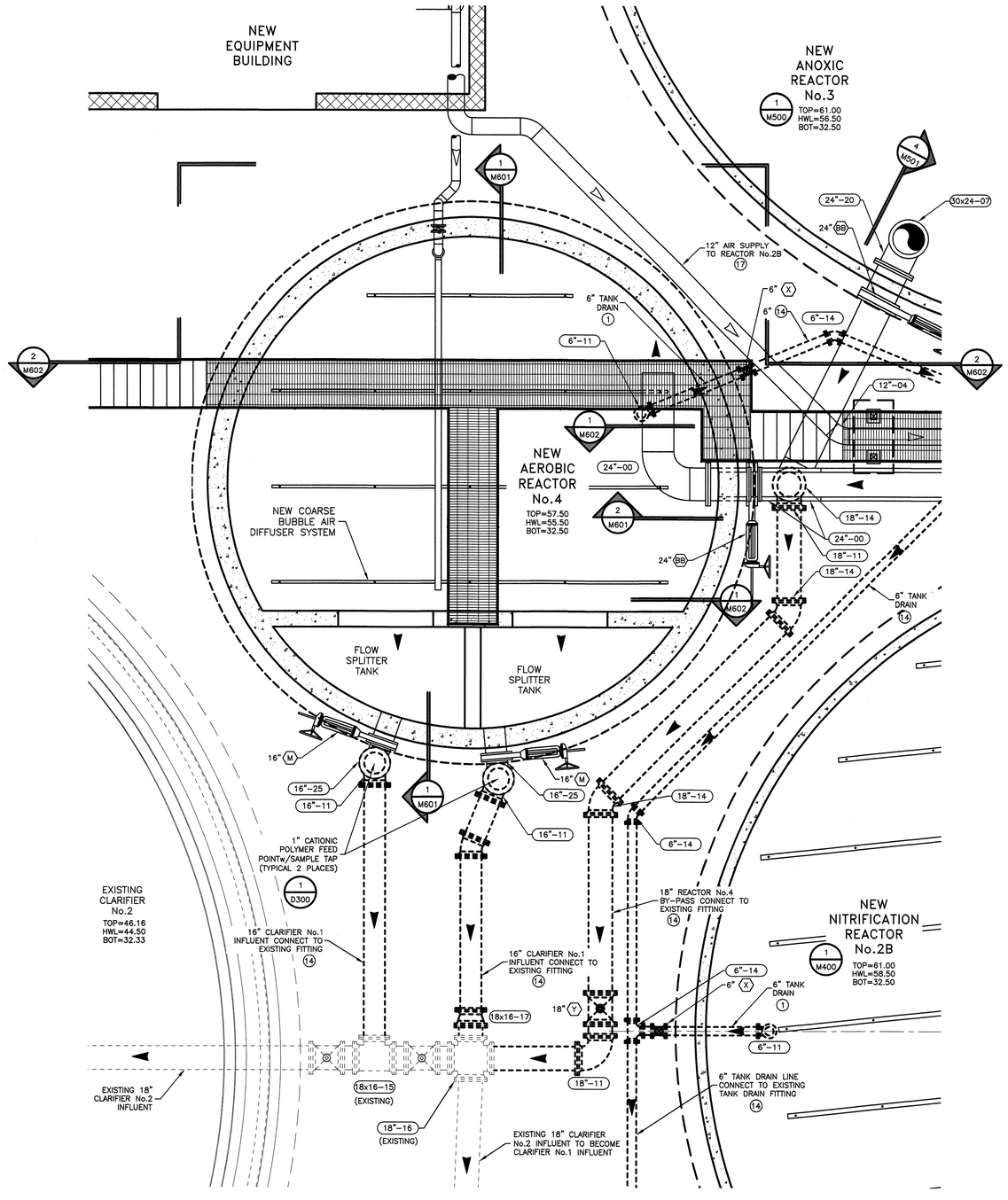

PLAN (1 / M600)

NO.	BY	CHKD	APRV	REVISION	DATE

NOTES:
1. REFER TO "D" SHEETS FOR ALL GENERAL PIPING NOTES, DETAILS, CALLOUTS, AND BEDDING REQUIREMENTS.
2. PIPE SUPPORTS ATTACHED TO TANK SIDEWALLS ARE TO BE COORDINATED WITH TANK MANUFACTURER
3. ALL EXISTING PIPES ARE TO BE FIELD LOCATED
4. NEW TANK CONNECTIONS ARE TO BE COORDINATED WITH TANK MANUFACTURER

LEGEND

FITTING SIZE — (8"-04) — FITTING TYPE

PIPE SIZE — 8" (14) — PIPE TYPE

VALVE SIZE — 8" (F) — VALVE TYPE

(SEE SHEET D100 FOR SCHEDULES & DESCRIPTIONS)

DETAIL NUMBER — 2 / 2 — SHEET DETAIL IS DRAWN ON

SECTION NUMBER — 2 / 2 — SHEET SECTION IS DRAWN ON

4' 2' 0 4'

SCALE: 1/4"=1'-0"

© COPYRIGHT 2015 – REID ENGINEERING COMPANY, INC.

JOHN HAGER REID LICENSE No. 6580 DELAWARE PROFESSIONAL ENGINEER
11/23/15
John H. Reid P.E.

DRAWN BY:	GDS
DESIGNED BY:	JHR
CHKD BY:	AEZ

THE INFORMATION CONTAINED HEREIN SHALL BE CONSIDERED PROPRIETARY TO REID ENGINEERING COMPANY, INC. ANY USE OR RE-PRODUCTION OF THIS INFORMATION WITHOUT THE EXPRESS WRITTEN CONSENT FROM REID ENGINEERING COMPANY, INC. IS HEREBY PROHIBITED.

REID ENGINEERING COMPANY, INC.
1210 Princess Anne Street
Fredericksburg, Virginia 22401
Tel:(540) 371-8500 Fax:(540) 371-8576

AEROBIC REACTOR No.4
PLAN

ALLEN HARIM FOODS, LLC
PHASE TWO
WASTEWATER TREATMENT SYSTEM
UPGRADE & EXPANSION

HARBESON, DELAWARE

DATE:	11-23-15	PROJECT NO.	AH02A
SCALE:	1/4"=1'-0"	DWG NO:	M600

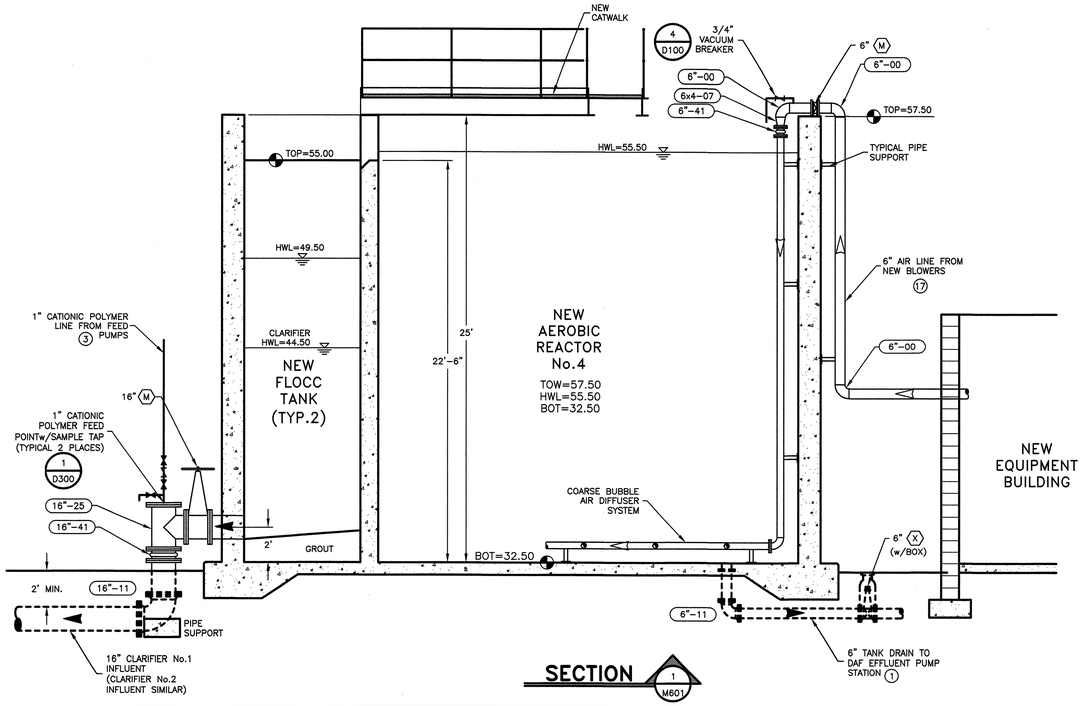

SECTION 1 / M601

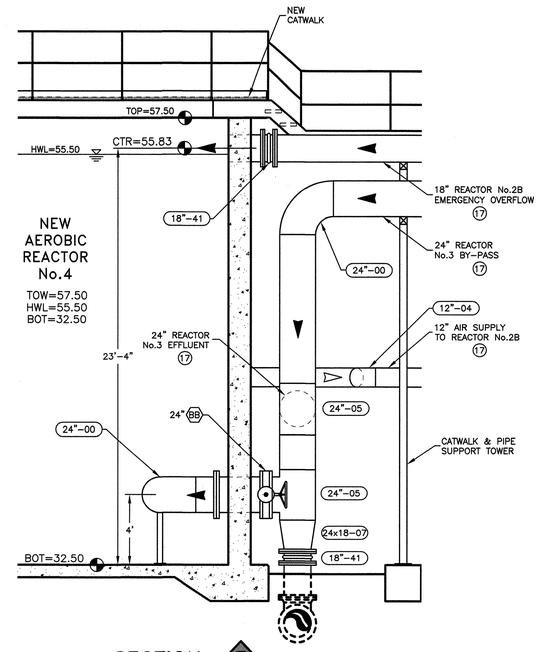

SECTION 2 / M601

NO.	BY	CHKD	APRV	REVISION	DATE

NOTES:

1. REFER TO "D" SHEETS FOR ALL GENERAL PIPING NOTES, DETAILS, CALLOUTS, AND BEDDING REQUIREMENTS.
2. PIPE SUPPORTS ATTACHED TO TANK SIDEWALLS ARE TO BE COORDINATED WITH TANK MANUFACTURER
3. ALL EXISTING PIPES ARE TO BE FIELD LOCATED
4. NEW TANK CONNECTIONS ARE TO BE COORDINATED WITH TANK MANUFACTURER

LEGEND

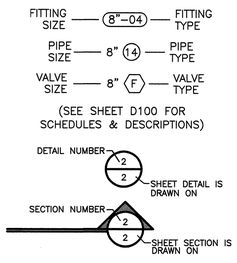

4' 2' 0 4'
SCALE: 1/4"=1'-0"

© COPYRIGHT 2015 – REID ENGINEERING COMPANY, INC.

JOHN HAGER REID LICENSE NO. 8560 PROFESSIONAL ENGINEER
11/23/15
John H. Reid P.E.

DRAWN BY:	GDS
DESIGNED BY:	JHR
CHKD BY:	AEZ

THE INFORMATION CONTAINED HEREIN SHALL BE CONSIDERED PROPRIETARY TO REID ENGINEERING COMPANY, INC. ANY USE OR RE-PRODUCTION OF THIS INFORMATION WITHOUT THE EXPRESS WRITTEN CONSENT FROM REID ENGINEERING COMPANY, INC. IS HEREBY PROHIBITED.

REID ENGINEERING COMPANY, INC.
1210 Princess Anne Street
Fredericksburg, Virginia 22401
Tel:(540) 371-8500 Fax:(540) 371-8576

AEROBIC REACTOR No.4
SECTIONS & DETAILS

ALLEN HARIM FOODS, LLC
PHASE TWO
WASTEWATER TREATMENT SYSTEM
UPGRADE & EXPANSION

HARBESON, DELAWARE

DATE:	11-23-15	PROJECT NO.	AH02A
SCALE:	1/4"=1'-0"	DWG NO:	M601

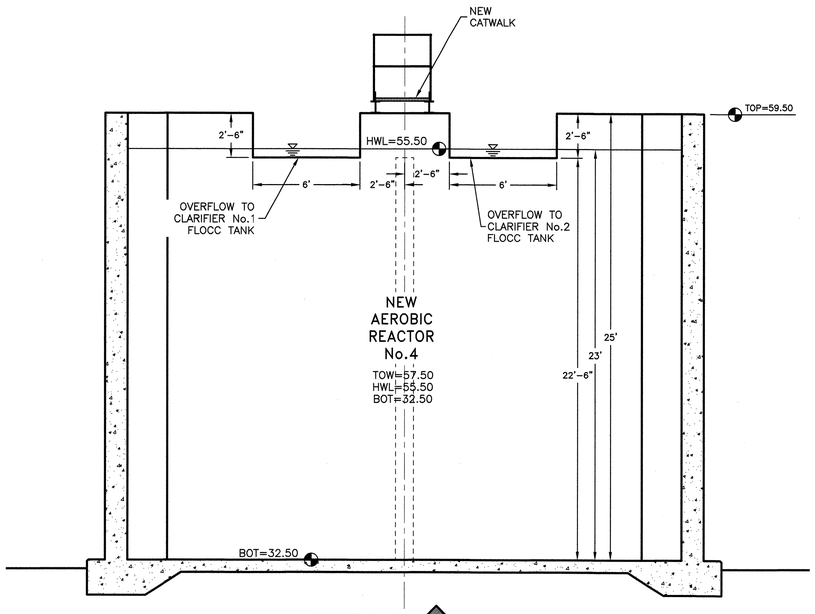

SECTION 1 M602

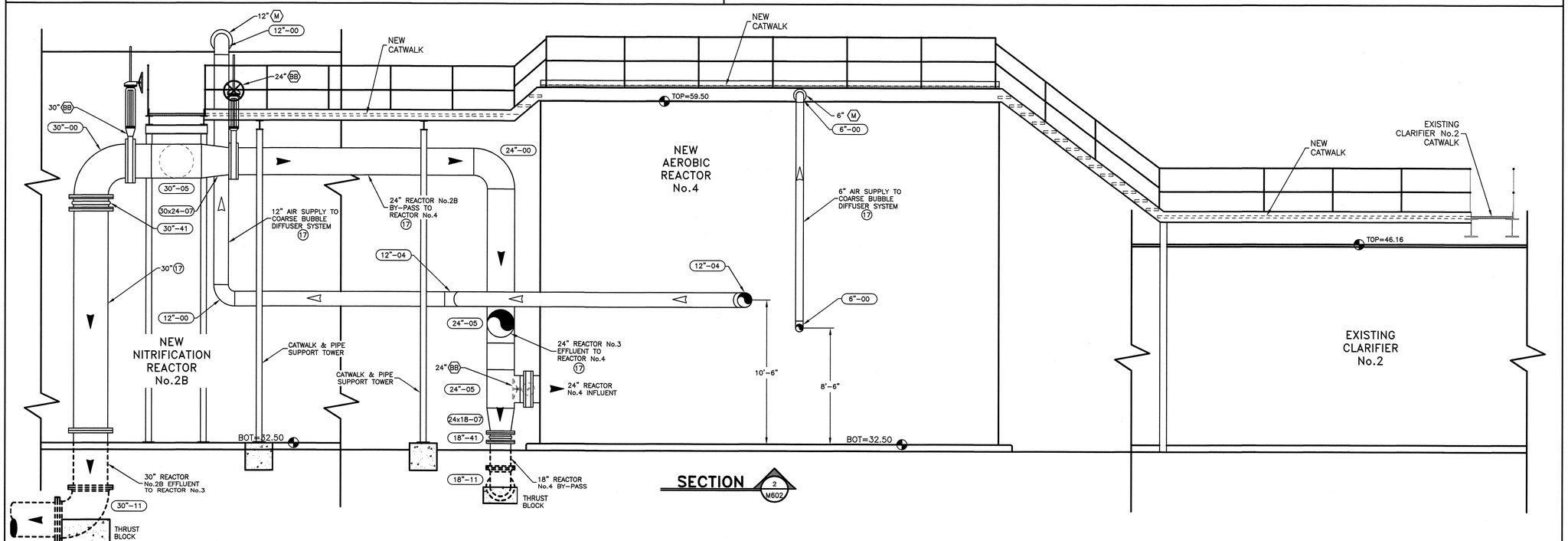

SECTION 2 M602

NO.	BY	CHKD	APRV	REVISION	DATE

REFER TO "D" SHEETS FOR ALL GENERAL PIPING NOTES, DETAILS, CALLOUTS, AND BEDDING REQUIREMENTS.

JOHN HAGER REID LICENSE No. 8580 DELAWARE PROFESSIONAL ENGINEER 11/23/15
John H. Reid P.E.

DRAWN BY:	GDS
DESIGNED BY:	JHR
CHKD BY:	AEZ

THE INFORMATION CONTAINED HEREIN SHALL BE CONSIDERED PROPRIETARY TO REID ENGINEERING COMPANY, INC. ANY USE OR RE-PRODUCTION OF THIS INFORMATION WITHOUT THE EXPRESS WRITTEN CONSENT FROM REID ENGINEERING COMPANY, INC. IS HEREBY PROHIBITED.

REID ENGINEERING COMPANY, INC.
1210 Princess Anne Street
Fredericksburg, Virginia 22401
Tel:(540) 371-8500 Fax:(540) 371-8576

AEROBIC REACTOR No.4
SECTIONS & DETAILS

ALLEN HARIM FOODS, LLC
PHASE TWO
WASTEWATER TREATMENT SYSTEM
UPGRADE & EXPANSION

HARBESON, DELAWARE

DATE:	11-23-15	PROJECT NO.	AH02A
SCALE:	1/4"=1'-0"	DWG NO:	M602

© COPYRIGHT 2015 – REID ENGINEERING COMPANY, INC.

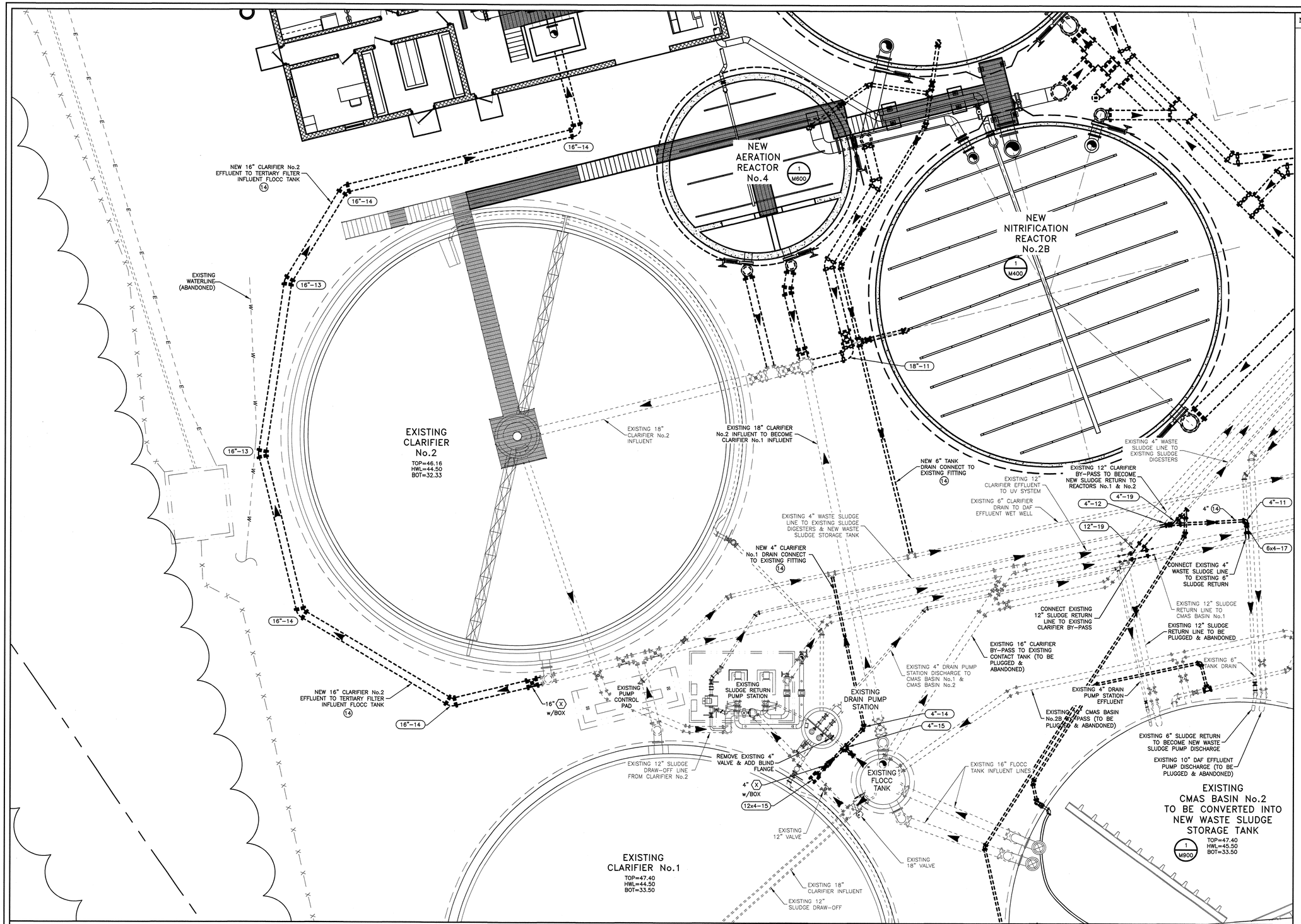

NO.	BY	CHKD	APRV	REVISION	DATE

NOTES:
THE CONTRACTOR SHALL BE RESPONSIBLE FOR THE DIGGING OF TEST HOLES PRIOR TO BEGINNING ANY CONSTRUCTION OR ORDERING PIPE MATERIALS. THESE TEST HOLES WILL BE MADE TO VERIFY ALL CROSSINGS BETWEEN NEW AND EXISTING UTILITIES AND AT CRITICAL GRADE CHANGES. IF CONDITIONS ARE FOUND IN THE FIELD WHICH ARE MATERIALLY DIFFERENT FROM THE PLANS THE CONTRACTOR SHALL NOTIFY THE OWNER AND REID ENGINEERING COMPANY IMMEDIATELY.

REFER TO "D" SHEETS FOR ALL GENERAL PIPING NOTES, DETAILS, CALLOUTS, AND BEDDING REQUIREMENTS.

LEGEND

FITTING SIZE — 8"-04 — FITTING TYPE
PIPE SIZE — 8" 14 — PIPE TYPE
VALVE SIZE — 8" F — VALVE TYPE

(SEE SHEET D100 FOR SCHEDULES & DESCRIPTIONS)

DETAIL NUMBER — 2/2 — SHEET DETAIL IS DRAWN ON
SECTION NUMBER — 2/2 — SHEET SECTION IS DRAWN ON

4' 2' 0 4'
SCALE: 1/4"=1'-0"

© COPYRIGHT 2015 – REID ENGINEERING COMPANY, INC.

JOHN HAGER REID LICENSE No. 6580 DELAWARE PROFESSIONAL ENGINEER
11/23/15
John H. Reid P.E.

DRAWN BY: GDS
DESIGNED BY: JHR
CHKD BY: AEZ

THE INFORMATION CONTAINED HEREIN SHALL BE CONSIDERED PROPRIETARY TO REID ENGINEERING COMPANY, INC. ANY USE OR RE-PRODUCTION OF THIS INFORMATION WITHOUT THE EXPRESS WRITTEN CONSENT FROM REID ENGINEERING COMPANY, INC. IS HEREBY PROHIBITED.

REID ENGINEERING COMPANY, INC.
1210 Princess Anne Street
Fredericksburg, Virginia 22401
Tel:(540) 371-8500 Fax:(540) 371-8576

CLARIFIER AREA MODIFICATIONS PLAN

ALLEN HARIM FOODS, LLC
PHASE TWO
WASTEWATER TREATMENT SYSTEM
UPGRADE & EXPANSION

HARBESON, DELAWARE

DATE:	11-23-15	PROJECT NO.	AH02A
SCALE:	1/4"=1'-0"	DWG NO:	M700

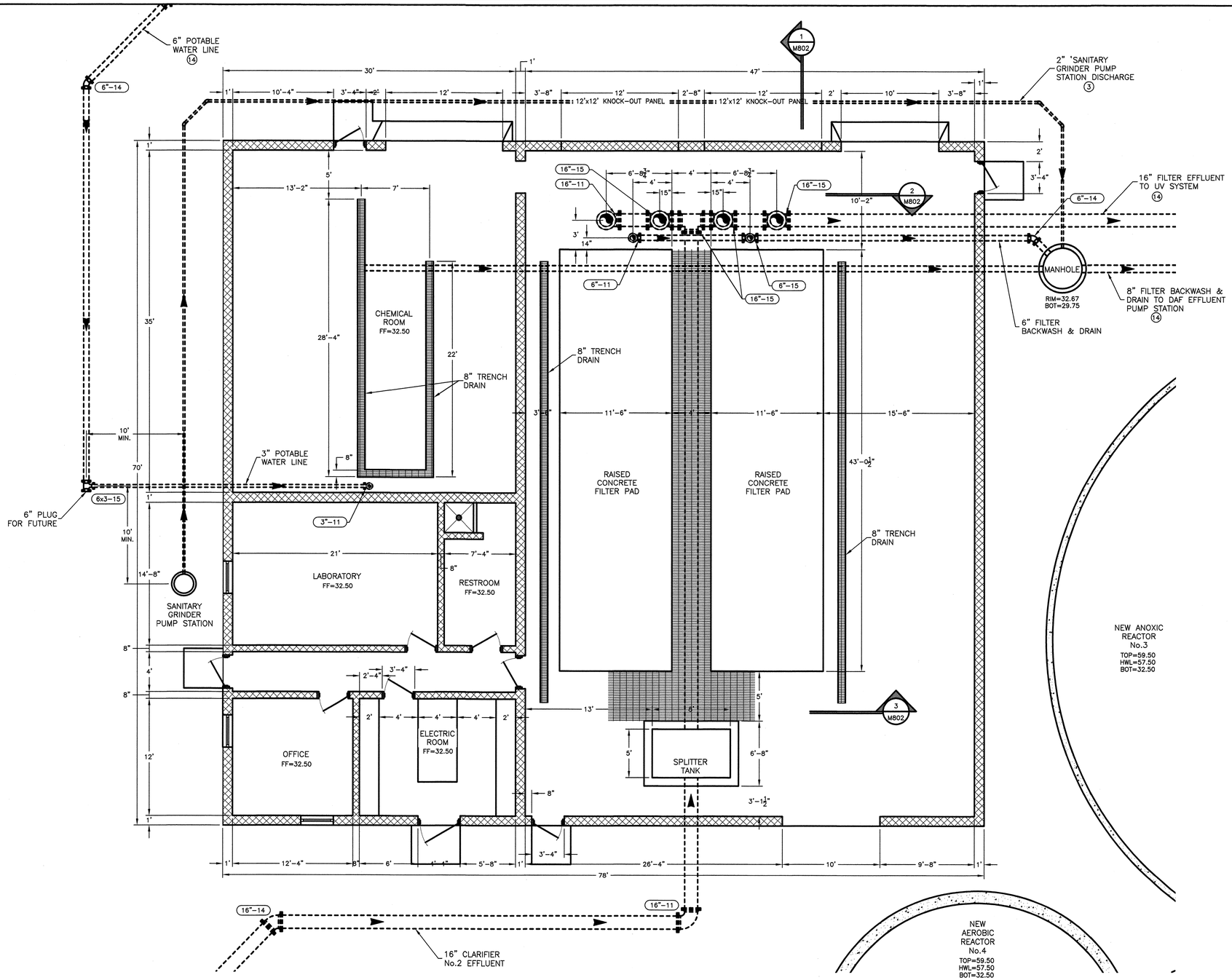

NO.	BY	CHKD	APRV	REVISION	DATE

© COPYRIGHT 2015 – REID ENGINEERING COMPANY, INC.

JOHN HAGER REID LICENSE No. 6580 PROFESSIONAL ENGINEER STATE OF DELAWARE
11/23/15
John H. Reid P.E.

DRAWN BY:	GDS
DESIGNED BY:	JHR
CHKD BY:	AEZ

THE INFORMATION CONTAINED HEREIN SHALL BE CONSIDERED PROPRIETARY TO REID ENGINEERING COMPANY, INC. ANY USE OR RE-PRODUCTION OF THIS INFORMATION WITHOUT THE EXPRESS WRITTEN CONSENT FROM REID ENGINEERING COMPANY, INC. IS HEREBY PROHIBITED.

REID ENGINEERING COMPANY, INC.
1210 Princess Anne Street
Fredericksburg, Virginia 22401
Tel:(540) 371-8500 Fax:(540) 371-8576

EQUIPMENT BUILDING
FOUNDATION & STUB-UP PLAN

ALLEN HARIM FOODS, LLC
PHASE TWO
WASTEWATER TREATMENT SYSTEM
UPGRADE & EXPANSION

HARBESON, DELAWARE

DATE:	11-23-15	PROJECT NO.	AH02A
SCALE:	3/16"=1'-0"	DWG NO:	M800

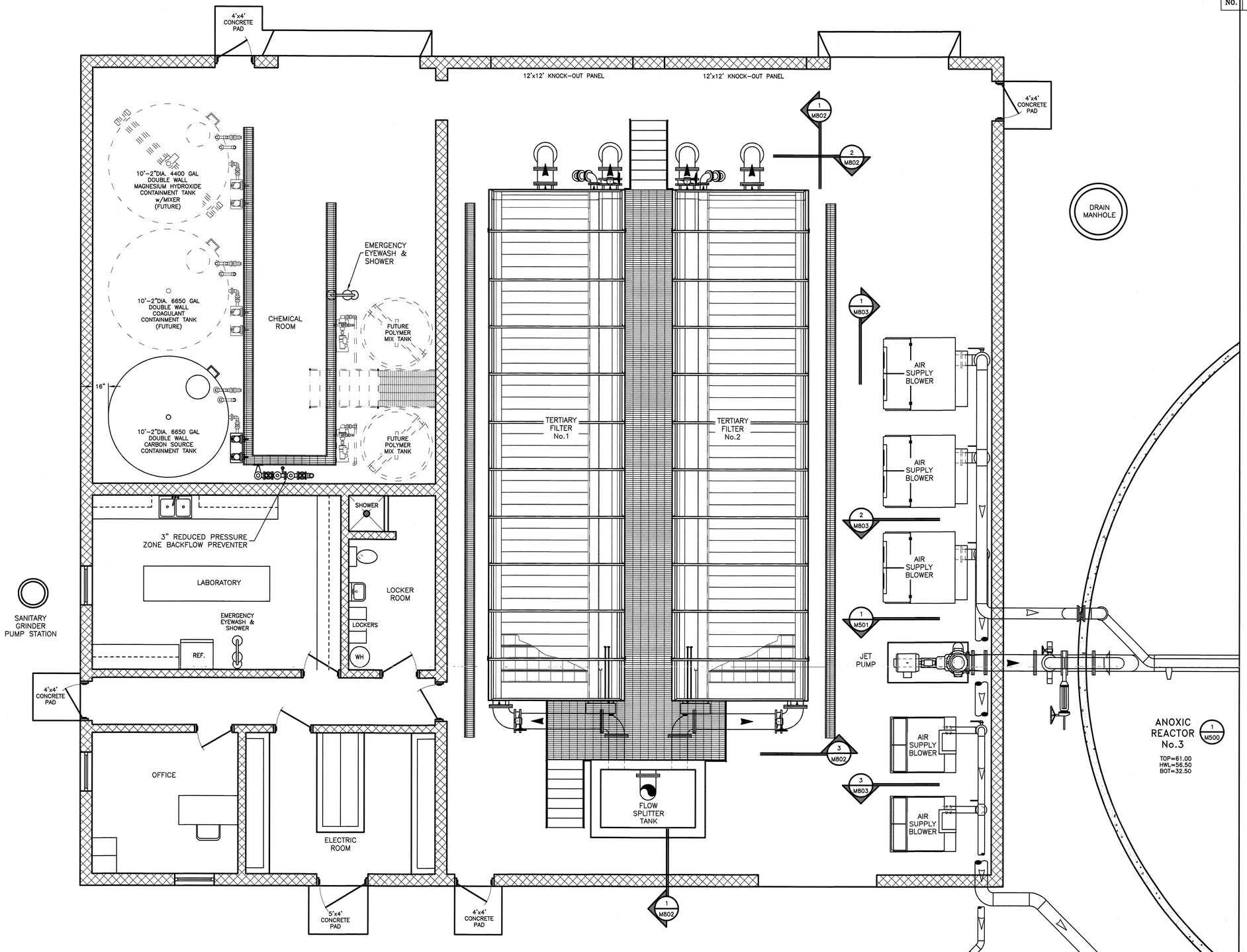

NO.	BY	CHKD	APRV	REVISION	DATE

NOTES:
1. REFER TO ELECTRICAL DRAWINGS FOR EXHAUST FAN & LOUVER LOCATIONS &DETAILS

4' 2' 0 4'
SCALE: 1/4"=1'-0"

JOHN HAGER REID LICENSE No. 6580 PROFESSIONAL ENGINEER
11/23/15
John H. Reid P.E.

DRAWN BY:	GDS
DESIGNED BY:	JHR
CHKD BY:	AEZ

THE INFORMATION CONTAINED HEREIN SHALL BE CONSIDERED PROPRIETARY TO REID ENGINEERING COMPANY, INC. ANY USE OR RE-PRODUCTION OF THIS INFORMATION WITHOUT THE EXPRESS WRITTEN CONSENT FROM REID ENGINEERING COMPANY, INC. IS HEREBY PROHIBITED.

REID ENGINEERING COMPANY, INC.
1210 Princess Anne Street
Fredericksburg, Virginia 22401
Tel:(540) 371-8500 Fax:(540) 371-8576

EQUIPMENT BUILDING
EQUIPMENT LAYOUT

ALLEN HARIM FOODS, LLC
PHASE TWO
WASTEWATER TREATMENT SYSTEM
UPGRADE & EXPANSION

HARBESON, DELAWARE

DATE:	11-23-15	PROJECT NO.	AH02A
SCALE:	1/4"=1'-0"	DWG NO:	M801

© COPYRIGHT 2015 – REID ENGINEERING COMPANY, INC.

NO.	BY	CHKD	APRV	REVISION	DATE

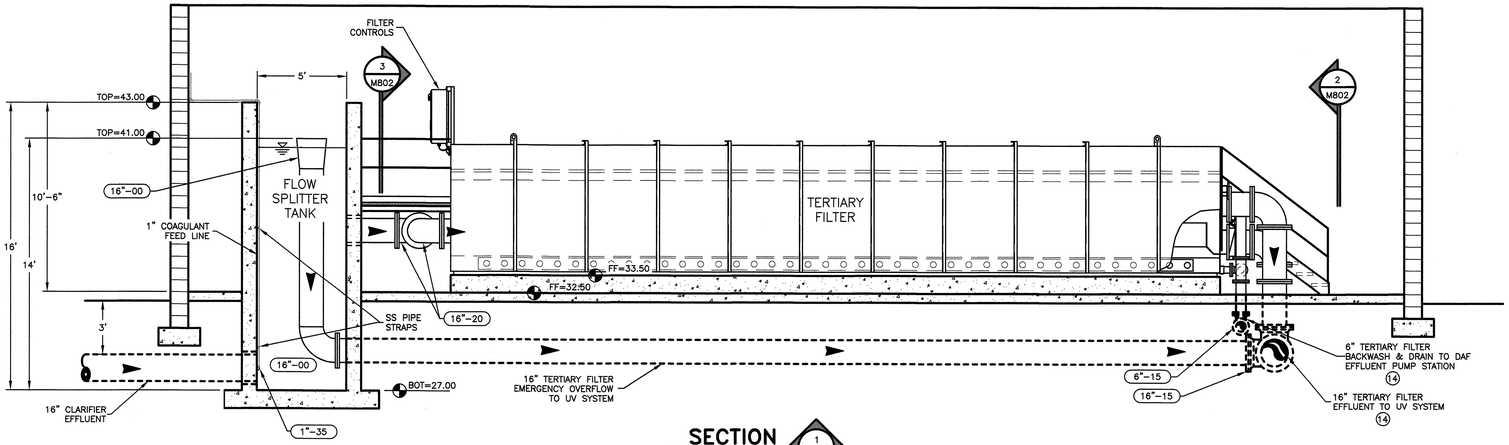

SECTION 1 M802

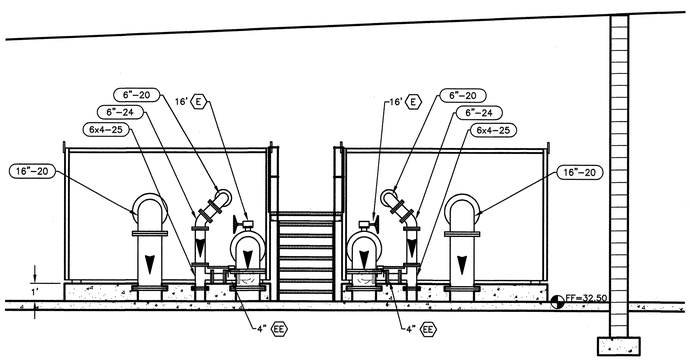

SECTION 2 M802

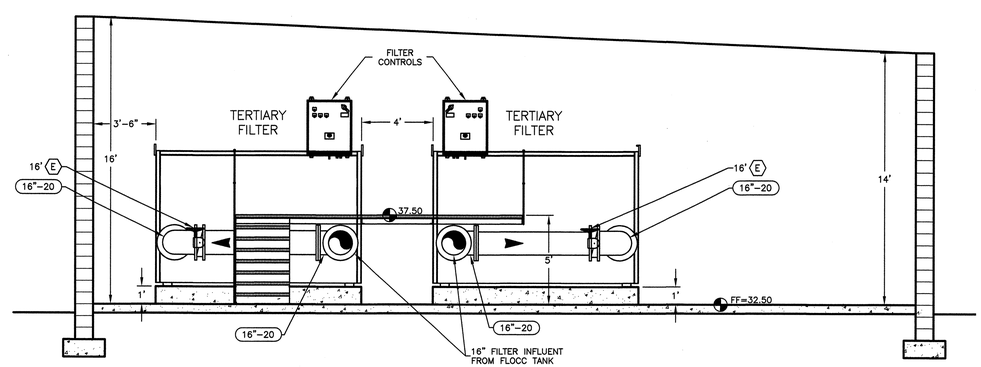

SECTION 3 M802

NOTES:
1. REFER TO ELECTRICAL DRAWINGS FOR EXHAUST FAN & LOUVER LOCATIONS &DETAILS

LEGEND

FITTING SIZE — 8"-04 — FITTING TYPE

PIPE SIZE — 8" 14 — PIPE TYPE

VALVE SIZE — 8" F — VALVE TYPE

(SEE SHEET D100 FOR SCHEDULES & DESCRIPTIONS)

DETAIL NUMBER — 2/2 — SHEET DETAIL IS DRAWN ON

SECTION NUMBER — 2/2 — SHEET SECTION IS DRAWN ON

4' 2' 0 4'
SCALE: 1/4"=1'-0"

REFER TO "D" SHEETS FOR ALL GENERAL PIPING NOTES, DETAILS, CALLOUTS, AND BEDDING REQUIREMENTS.

JOHN HAGER REID LICENSE No. 6580 PROFESSIONAL ENGINEER 11/23/15
John H. Reid P.E.

DRAWN BY:	GDS
DESIGNED BY:	JHR
CHKD BY:	AEZ

THE INFORMATION CONTAINED HEREIN SHALL BE CONSIDERED PROPRIETARY TO REID ENGINEERING COMPANY, INC. ANY USE OR REPRODUCTION OF THIS INFORMATION WITHOUT THE EXPRESS WRITTEN CONSENT FROM REID ENGINEERING COMPANY, INC. IS HEREBY PROHIBITED.

REID ENGINEERING COMPANY, INC.
1210 Princess Anne Street
Fredericksburg, Virginia 22401
Tel:(540) 371-8500 Fax:(540) 371-8576

TERTIARY FILTER EQUIPMENT SECTIONS & DETAILS

ALLEN HARIM FOODS, LLC
PHASE TWO
WASTEWATER TREATMENT SYSTEM
UPGRADE & EXPANSION

HARBESON, DELAWARE

DATE:	11-23-15	PROJECT NO.	AH02A
SCALE:	1/4"=1'-0"	DWG NO:	M802

© COPYRIGHT 2015 – REID ENGINEERING COMPANY, INC.

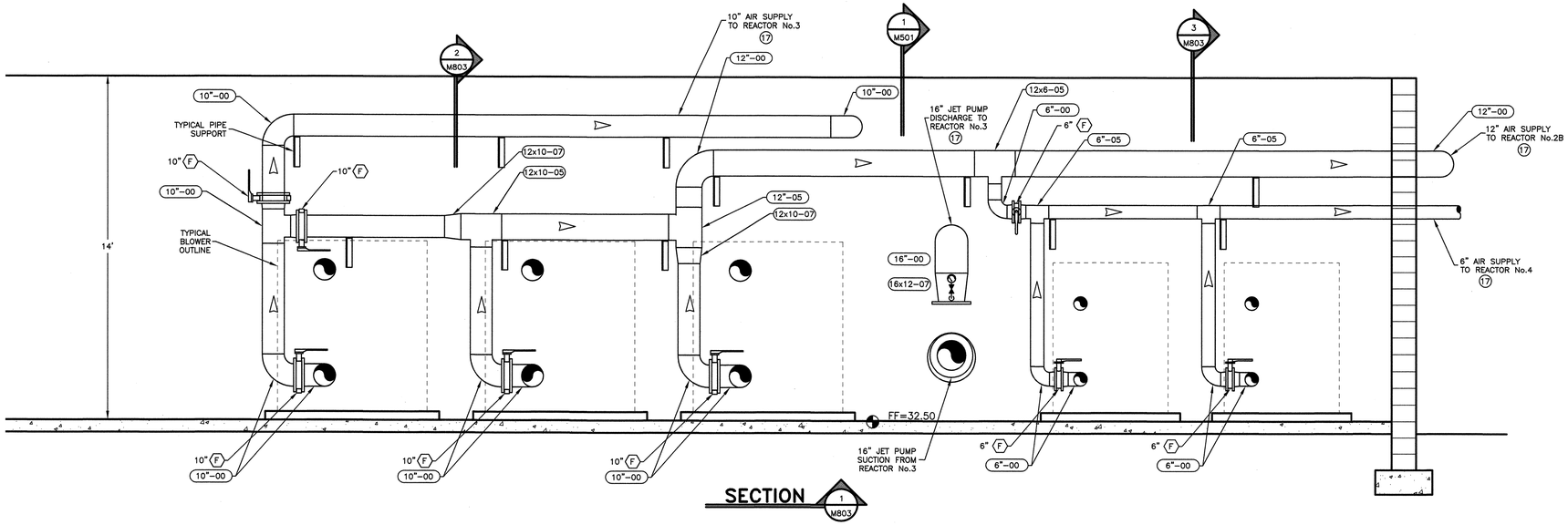

SECTION 1 M803

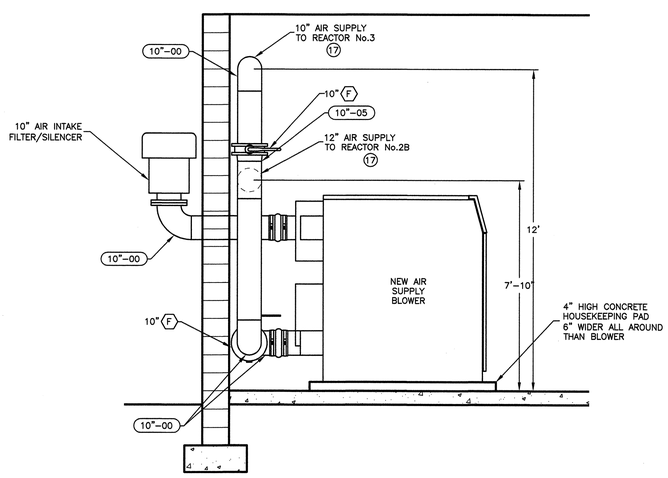

SECTION 2 M803

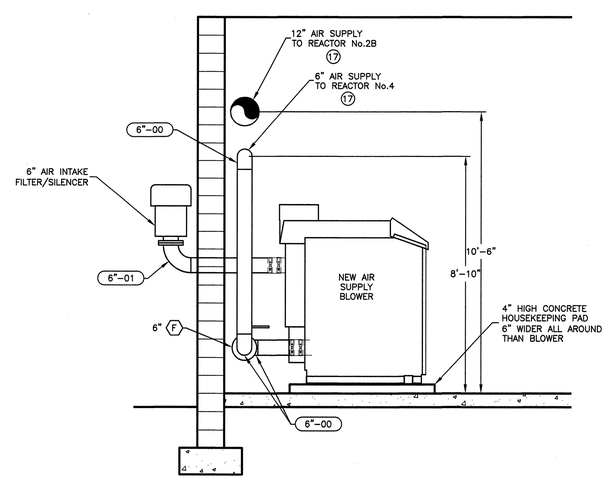

SECTION 3 M803

NO.	BY	CHKD	APRV	REVISION	DATE

NOTES:
1. REFER TO ELECTRICAL DRAWINGS FOR EXHAUST FAN & LOUVER LOCATIONS &DETAILS

LEGEND

FITTING SIZE — (8"-04) — FITTING TYPE
PIPE SIZE — 8" (14) — PIPE TYPE
VALVE SIZE — 8" (F) — VALVE TYPE

(SEE SHEET D100 FOR SCHEDULES & DESCRIPTIONS)

DETAIL NUMBER — 2 / 2 — SHEET DETAIL IS DRAWN ON

SECTION NUMBER — 2 / 2 — SHEET SECTION IS DRAWN ON

4' 2' 0 4'
SCALE: 1/4"=1'-0"

REFER TO "D" SHEETS FOR ALL GENERAL PIPING NOTES, DETAILS, CALLOUTS, AND BEDDING REQUIREMENTS.

JOHN HAGER REID LICENSE No. 6580 PROFESSIONAL ENGINEER
11/23/15
John H. Reid P.E.

DRAWN BY:	GDS
DESIGNED BY:	JHR
CHKD BY:	AEZ

THE INFORMATION CONTAINED HEREIN SHALL BE CONSIDERED PROPRIETARY TO REID ENGINEERING COMPANY, INC. ANY USE OR RE-PRODUCTION OF THIS INFORMATION WITHOUT THE EXPRESS WRITTEN CONSENT FROM REID ENGINEERING COMPANY, INC. IS HEREBY PROHIBITED.

REID ENGINEERING COMPANY, INC.
1210 Princess Anne Street
Fredericksburg, Virginia 22401
Tel:(540) 371-8500 Fax:(540) 371-8576

BLOWER & JET PUMP SECTIONS & DETAILS

ALLEN HARIM FOODS, LLC
PHASE TWO
WASTEWATER TREATMENT SYSTEM
UPGRADE & EXPANSION

HARBESON, DELAWARE

DATE:	11-23-15	PROJECT NO.	AH02A
SCALE:	1/4"=1'-0"	DWG NO:	M803

© COPYRIGHT 2015 – REID ENGINEERING COMPANY, INC.

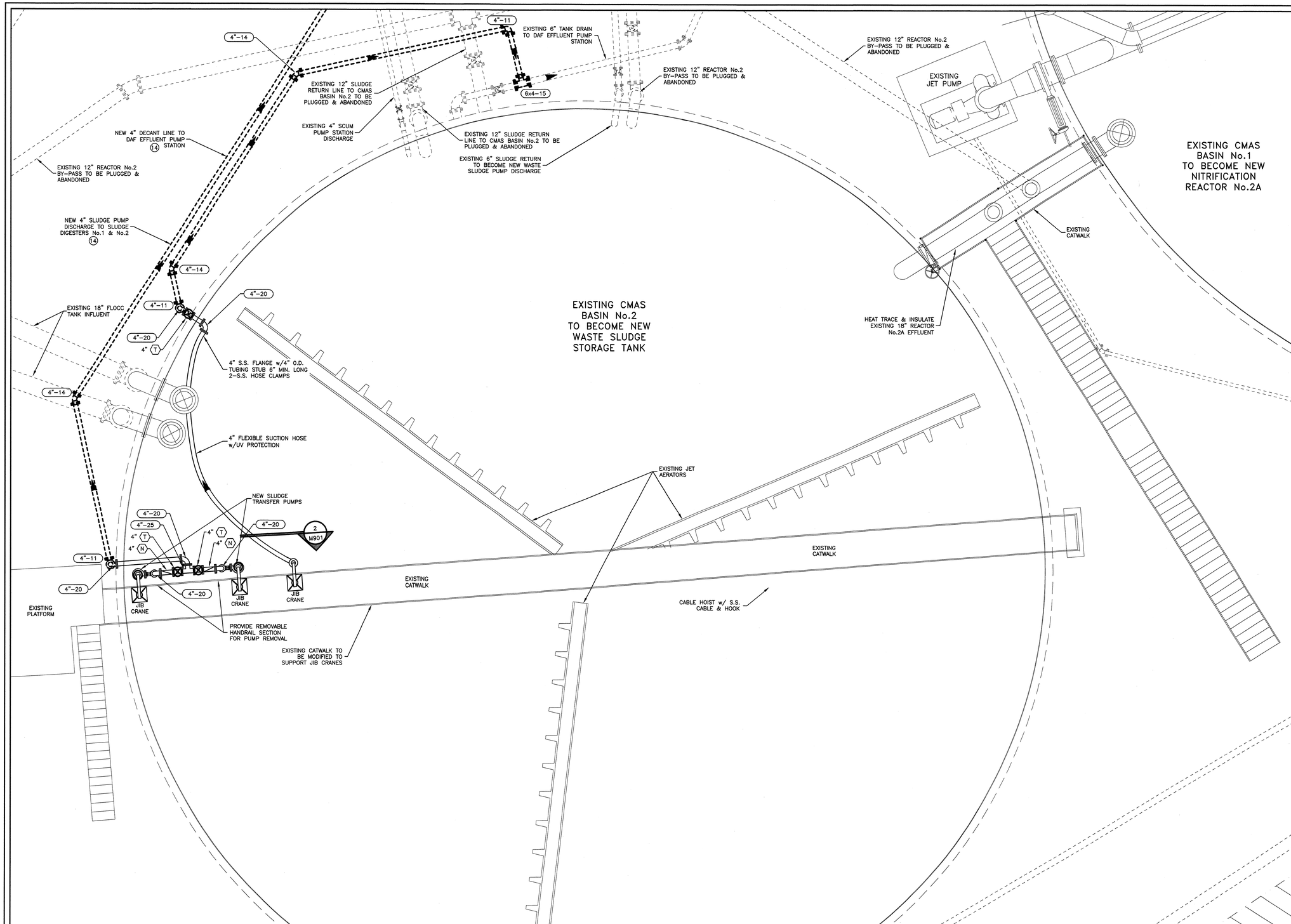

NO.	BY	CHKD	APRV	REVISION	DATE

NOTES:
THE CONTRACTOR SHALL BE RESPONSIBLE FOR THE DIGGING OF TEST HOLES PRIOR TO BEGINNING ANY CONSTRUCTION OR ORDERING PIPE MATERIALS. THESE TEST HOLES WILL BE MADE TO VERIFY ALL CROSSINGS BETWEEN NEW AND EXISTING UTILITIES AND AT CRITICAL GRADE CHANGES. IF CONDITIONS ARE FOUND IN THE FIELD WHICH ARE MATERIALLY DIFFERENT FROM THE PLANS THE CONTRACTOR SHALL NOTIFY THE OWNER AND REID ENGINEERING COMPANY IMMEDIATELY.

LEGEND

FITTING SIZE — 8"-04 — FITTING TYPE

PIPE SIZE — 8" 14 — PIPE TYPE

VALVE SIZE — 8" F — VALVE TYPE

(SEE SHEET D100 FOR SCHEDULES & DESCRIPTIONS)

DETAIL NUMBER 2 / 2 — SHEET DETAIL IS DRAWN ON

SECTION NUMBER 2 / 2 — SHEET SECTION IS DRAWN ON

4' 2' 0 4'
SCALE: 1/4"=1'-0"

REFER TO "D" SHEETS FOR ALL GENERAL PIPING NOTES, DETAILS, CALLOUTS, AND BEDDING REQUIREMENTS.

JOHN HAGER REID LICENSE No. 6580 INDEPENDENCE, VIRGINIA PROFESSIONAL ENGINEER
11/21/15
John H. Reid P.E.

DRAWN BY:	GDS
DESIGNED BY:	JHR
CHKD BY:	AEZ

THE INFORMATION CONTAINED HEREIN SHALL BE CONSIDERED PROPRIETARY TO REID ENGINEERING COMPANY, INC. ANY USE OR RE-PRODUCTION OF THIS INFORMATION WITHOUT THE EXPRESS WRITTEN CONSENT FROM REID ENGINEERING COMPANY, INC. IS HEREBY PROHIBITED.

REID ENGINEERING COMPANY, INC.
1210 Princess Anne Street
Fredericksburg, Virginia 22401
Tel:(540) 371-8500 Fax:(540) 371-8576

WASTE SLUDGE STORAGE TANK PLAN

ALLEN HARIM FOODS, LLC
PHASE TWO
WASTEWATER TREATMENT SYSTEM
UPGRADE & EXPANSION

HARBESON, DELAWARE

DATE:	11-23-15	PROJECT NO.	AH02A
SCALE:	3/16"=1'-0"	DWG NO:	M900

© COPYRIGHT 2015 – REID ENGINEERING COMPANY, INC.

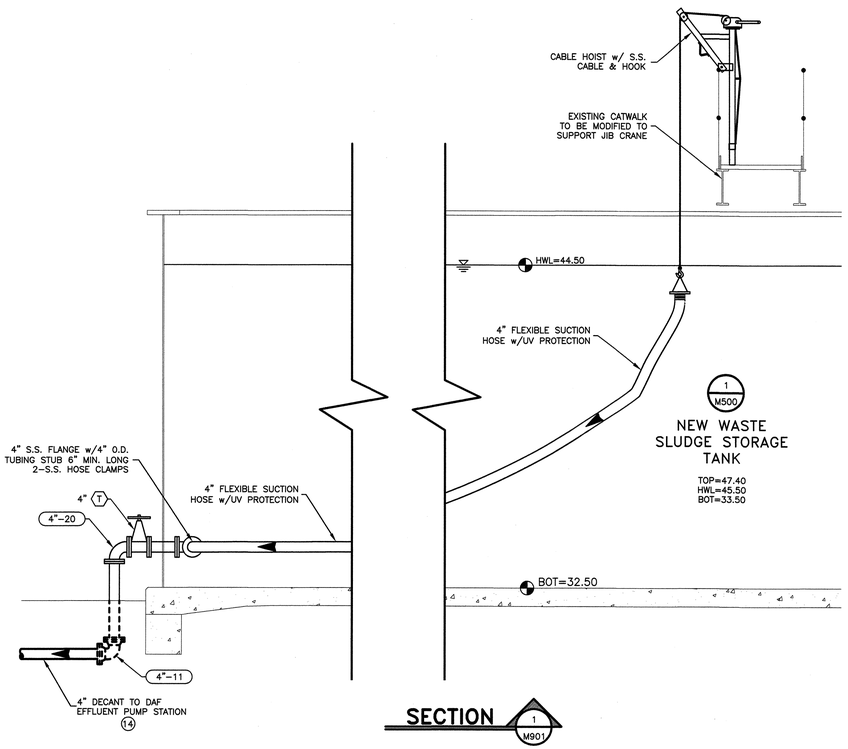

SECTION 1 / M901

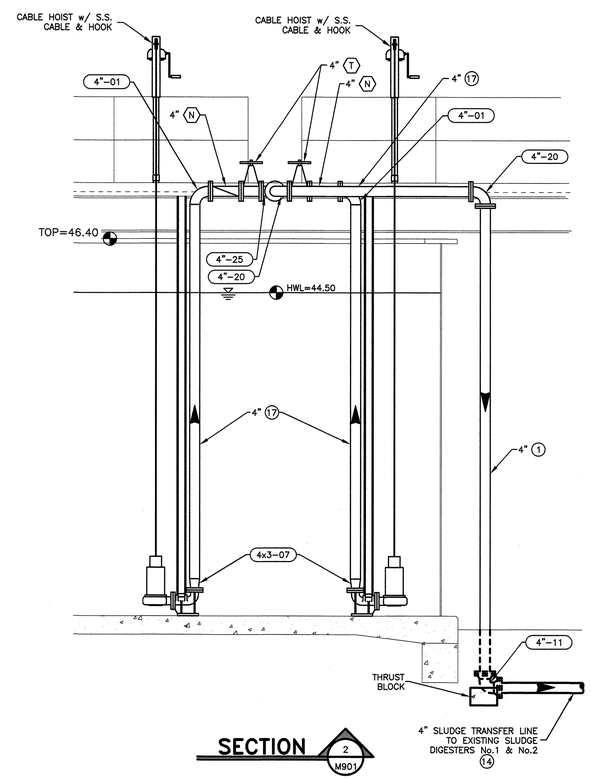

SECTION 2 / M901

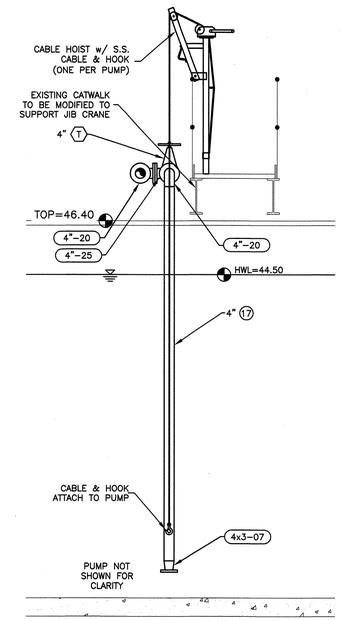

SECTION 3 / M901

NO.	BY	CHKD	APRV	REVISION	DATE

NOTES:

1. REFER TO "D" SHEETS FOR ALL GENERAL PIPING NOTES, DETAILS, CALLOUTS, AND BEDDING REQUIREMENTS.
2. PIPE SUPPORTS ATTACHED TO TANK SIDEWALLS ARE TO BE COORDINATED WITH TANK MANUFACTURER

LEGEND

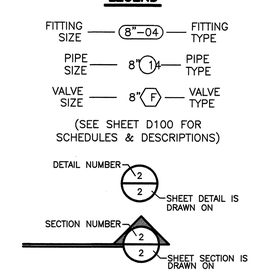

3' 2' 1' 0 3'

SCALE=3/8"=1'-0"

© COPYRIGHT 2015 – REID ENGINEERING COMPANY, INC.

JOHN HAGER REID LICENSE No. 8580 PROFESSIONAL ENGINEER DELAWARE

11/23/15

John H. Reid P.E.

DRAWN BY:	GDS
DESIGNED BY:	JHR
CHKD BY:	AEZ

THE INFORMATION CONTAINED HEREIN SHALL BE CONSIDERED PROPRIETARY TO REID ENGINEERING COMPANY, INC. ANY USE OR RE-PRODUCTION OF THIS INFORMATION WITHOUT THE EXPRESS WRITTEN CONSENT FROM REID ENGINEERING COMPANY, INC. IS HEREBY PROHIBITED.

REID ENGINEERING COMPANY, INC.

1210 Princess Anne Street
Fredericksburg, Virginia 22401
Tel:(540) 371-8500 Fax:(540) 371-8576

WASTE SLUDGE STORAGE TANK
SECTIONS & DETAILS

ALLEN HARIM FOODS, LLC
PHASE TWO
WASTEWATER TREATMENT SYSTEM
UPGRADE & EXPANSION

HARBESON, DELAWARE

DATE:	11-23-15	PROJECT NO.	AH02A
SCALE:	3/8"=1'-0"	DWG NO:	M901

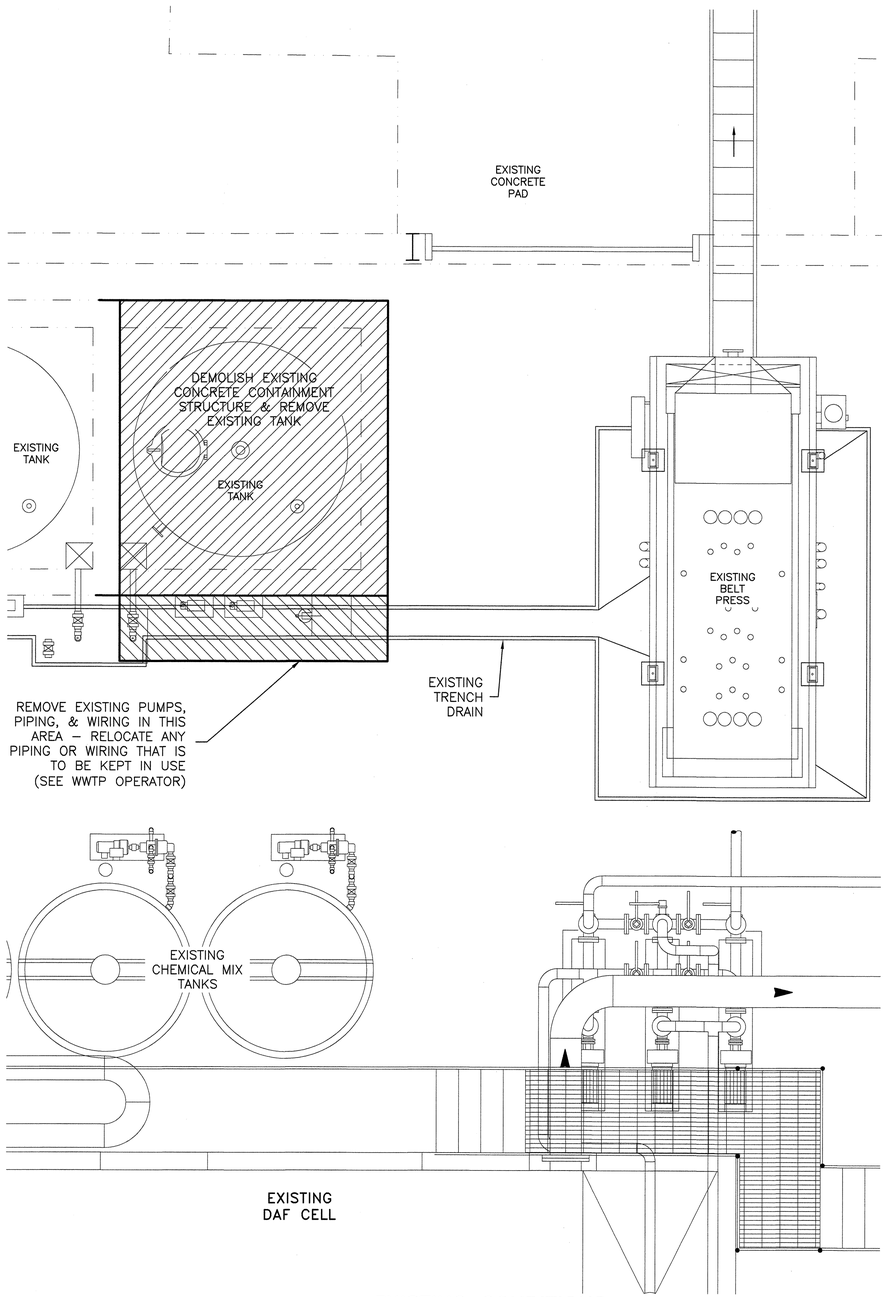

EXISTING CONDITIONS & DEMOLITION PLAN

1 / M1000

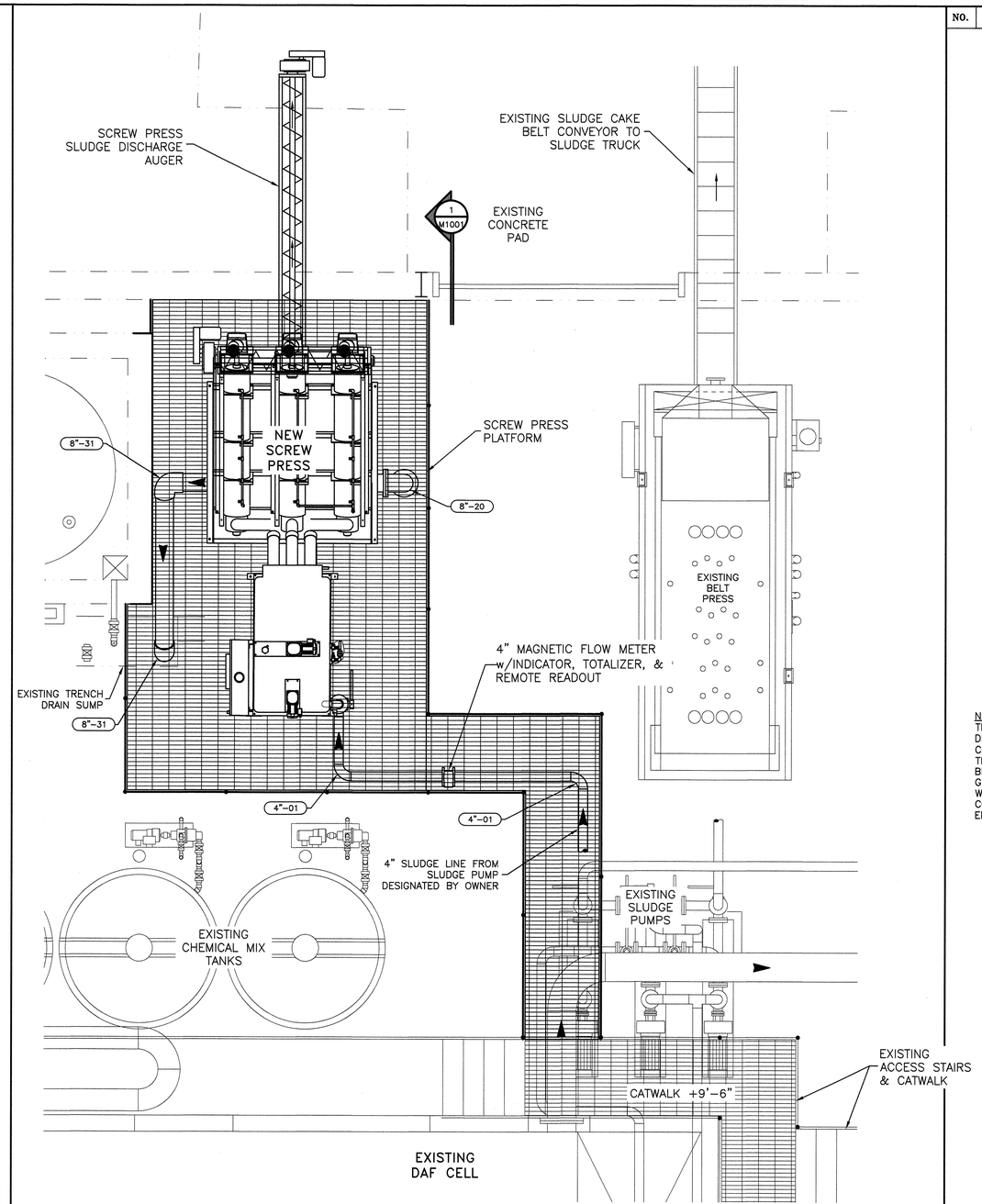

UPPER LEVEL PLAN

2 / M1000

NO.	BY	CHKD	APRV	REVISION	DATE

NOTES:
THE CONTRACTOR SHALL BE RESPONSIBLE FOR THE DIGGING OF TEST HOLES PRIOR TO BEGINNING ANY CONSTRUCTION OR ORDERING PIPE MATERIALS. THESE TEST HOLES WILL BE MADE TO VERIFY ALL CROSSINGS BETWEEN NEW AND EXISTING UTILITIES AND AT CRITICAL GRADE CHANGES. IF CONDITIONS ARE FOUND IN THE FIELD WHICH ARE MATERIALLY DIFFERENT FROM THE PLANS THE CONTRACTOR SHALL NOTIFY THE OWNER AND REID ENGINEERING COMPANY IMMEDIATELY.

LEGEND

FITTING SIZE — (8"–04) — FITTING TYPE
PIPE SIZE — 8" (1) — PIPE TYPE
VALVE SIZE — 8" (F) — VALVE TYPE

(SEE SHEET D100 FOR SCHEDULES & DESCRIPTIONS)

DETAIL NUMBER — 2 / 2 — SHEET DETAIL IS DRAWN ON
SECTION NUMBER — 2 / 2 — SHEET SECTION IS DRAWN ON

3' 2' 1' 0 3'
SCALE=3/8"=1'–0"

REFER TO "D" SHEETS FOR ALL GENERAL PIPING NOTES, DETAILS, CALLOUTS, AND BEDDING REQUIREMENTS.

JOHN HAGER REID LICENSE No. 6580 PROFESSIONAL ENGINEER COMMONWEALTH OF VIRGINIA
11/23/15
John H. Reid P.E.

DRAWN BY:	GDS
DESIGNED BY:	JHR
CHKD BY:	AEZ

THE INFORMATION CONTAINED HEREIN SHALL BE CONSIDERED PROPRIETARY TO REID ENGINEERING COMPANY, INC. ANY USE OR RE-PRODUCTION OF THIS INFORMATION WITHOUT THE EXPRESS WRITTEN CONSENT FROM REID ENGINEERING COMPANY, INC. IS HEREBY PROHIBITED.

REID ENGINEERING COMPANY, INC.
1210 Princess Anne Street
Fredericksburg, Virginia 22401
Tel:(540) 371–8500 Fax:(540) 371–8576

EXISTING DAF EQUIPMENT BUILDING
SCREW PRESS PLAN

ALLEN HARIM FOODS, LLC
PHASE TWO
WASTEWATER TREATMENT SYSTEM
UPGRADE & EXPANSION

HARBESON, DELAWARE

DATE:	11–23–15	PROJECT NO.	AH01A
SCALE:	3/8"=1'–0"	DWG NO:	M1000

© COPYRIGHT 2015 – REID ENGINEERING COMPANY, INC.

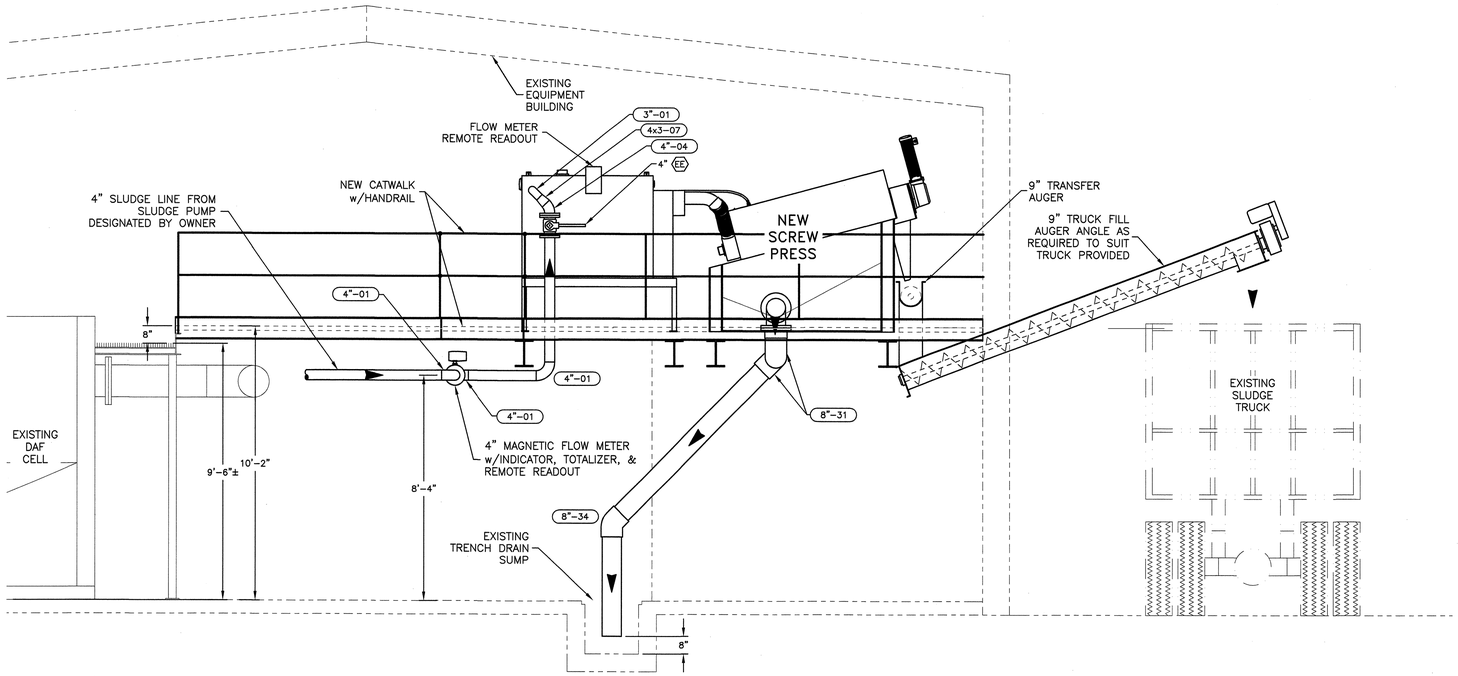

SECTION 1/M1001

NO.	BY	CHKD	APRV	REVISION	DATE

NOTES:

1. THE CONTRACTOR SHALL BE RESPONSIBLE FOR THE DIGGING OF TEST HOLES PRIOR TO BEGINNING ANY CONSTRUCTION OR ORDERING PIPE MATERIALS. THESE TEST HOLES WILL BE MADE TO VERIFY ALL CROSSINGS BETWEEN NEW AND EXISTING UTILITIES AND AT CRITICAL GRADE CHANGES. IF CONDITIONS ARE FOUND IN THE FIELD WHICH ARE MATERIALLY DIFFERENT FROM THE PLANS THE CONTRACTOR SHALL NOTIFY THE OWNER AND REID ENGINEERING COMPANY IMMEDIATELY.
2. REFER TO "D" SHEETS FOR ALL GENERAL PIPING NOTES, DETAILS, CALLOUTS, AND BEDDING REQUIREMENTS.

LEGEND

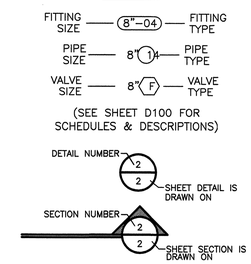

3' 2' 1' 0 3'

SCALE=3/8"=1'–0"

JOHN HAGER REID LICENSE No. 8580 DELAWARE PROFESSIONAL ENGINEER

11/23/15

John H. Reid P.E.

DRAWN BY:	GDS
DESIGNED BY:	JHR
CHKD BY:	AEZ

THE INFORMATION CONTAINED HEREIN SHALL BE CONSIDERED PROPRIETARY TO REID ENGINEERING COMPANY, INC. ANY USE OR RE-PRODUCTION OF THIS INFORMATION WITHOUT THE EXPRESS WRITTEN CONSENT FROM REID ENGINEERING COMPANY, INC. IS HEREBY PROHIBITED.

REID ENGINEERING COMPANY, INC.

1210 Princess Anne Street
Fredericksburg, Virginia 22401
Tel:(540) 371–8500 Fax:(540) 371–8576

WASTE SLUDGE STORAGE TANK
SECTIONS & DETAILS

ALLEN HARIM FOODS, LLC
PHASE TWO
WASTEWATER TREATMENT SYSTEM
UPGRADE & EXPANSION

HARBESON, DELAWARE

DATE:	11–23–15	PROJECT NO.	AH02A
SCALE:	3/8"=1'–0"	DWG NO:	M1001

© COPYRIGHT 2015 – REID ENGINEERING COMPANY, INC.

NO.	BY	CHKD	APRV	REVISION	DATE

GENERAL NOTES

1. CONTRACTOR TO PLACE GRATING IN A CONSISTENT AND EVEN PATTERN ARRANGEMENT ACROSS ENTIRE WALKING SURFACE.
2. SLOPE ALL FLOORS TOWARD DRAINS 3/16"/FOOT MINIMUM.
3. ALL FLOOR SLABS, AND SIDEWALKS TO BE BROOM FINISHED, EXCEPT UNDER CHEMICAL TANKS WHICH ARE TO BE SMOOTH TROWEL FINISHED AND LEVEL.
4. CONSTRUCTION EXPANSION JOINTS TO BE FLEXCELL, NEOPRENE, OR APPROVED EQUAL.
5. EXPANSION JOINT MATERIAL REQUIRED AROUND WALLS, EQUIPMENT PADS, & PIPES THROUGH SLABS, WITH TOP 1/2" FILLED WITH POURED JOINT SEALER.
6. CONTRACTOR SHALL BE RESPONSIBLE FOR EQUIPMENT LUBRICATION & START-UP PER MANUFACTURERS INSTRUCTIONS.
7. PUMP PADS TO BE 6" HIGHER THAN FINISH FLOOR ELEVATION, OR AS SHOWN ON DRAWINGS. LENGTH AND WIDTH OF PUMP PAD TO ACCOMODATE LARGEST PUMP PLUS 6" MINIMUM AT SIDES AND ENDS. CONFIRM DIMENSIONS WITH PUMP SHOP DRAWINGS. TOP AND BOTTOM REINFORCING REQ'D #4 AT 12" ON CENTER EACH WAY. (OR AS SHOWN ON DWG.)
8. ALL FLOOR DRAIN CONNECTIONS IN BUILDINGS & ENCLOSURES SHALL CONTAIN P-TRAPS & VENTS PER LOCAL CODE.

PIPING NOTES

1. ALL MECHANICAL JOINT CONNECTIONS UNDER SLABS TO HAVE RESTRAINED JOINTS.
2. FORCE MAINS REQUIRE RESTRAINED JOINTS AT FITTINGS.
3. (1) (8) AND (14) PIPING REQUIRES MECHANICAL JOINT FITTINGS AND RESTRAINED JOINTS.
4. ALL EXPOSED LIQUID RETAINING PIPE TO HAVE WATERPROOF INSULATION, HEAT TRACING, AND A RIGID WATERPROOF JACKET TO BELOW FROST LINE (24" MIN.), OR 6" ABOVE HIGH WATER LEVEL. SEE CHEMICAL SYSTEM NOTES FOR EXCEPTIONS.
5. PROVIDE ADAPTERS & BUSHINGS AS REQUIRED TO SUIT EQUIPMENT CONNECTIONS AND CHANGES IN PIPE SIZE.
6. SMALL DIAMETER (4" & UNDER) SOLVENT WELD P.V.C. PIPING TO BE SCH. 80 W/SOLVENT WELDED FITTINGS & VALVES. TO BE ASSEMBLED USING PURPLE PRIMER & HEAVY DUTY GRAY INDUSTRIAL GRADE P.V.C. SOLVENT CEMENT. NIBCO/CHEMTROL (O.A.E.)
7. PIPE SUPPORTS FOR P.V.C. PIPING TO BE 5' MAX. ON CENTER. UNISTRUT TO BE USED WHERE WALL SUPPORTS ARE NOT AVAILABLE. HORIZONTAL BRACING REQ'D. TO PREVENT MOVEMENT.
8. EXPOSED PIPING TO BE IDENTIFIED BY CONTENT AND FLOW DIRECTION WITH PIPE MARKERS THAT CONFORM TO ANSI/OSHA SPECIFICATIONS. ANSI A13.1-1981
9. SEE CHEMICAL SYSTEM NOTES FOR CHEMICAL PIPING INFORMATION.
10. UNLESS OTHERWISE NOTED BY THE ENGINEER, ALL BURIED 3" & LARGER PIPE IS TO BE BEDDED USING THE STANDARD BEDDING DETAIL ON SHEET D200.
11. ALL PIPING ABOVE GROUND SHALL BE RIGIDLY SUPPORTED TO PREVENT MOVEMENT IN ANY DIRECTION. HORIZONTAL RUNS OF PIPING ARE TO HAVE EXPANSION JOINTS AT MAXIMUM OF 100' ON CENTER & ACCOMMODATE ANY SPECIAL EXPANSION/CONTRACTION CONDITIONS FOR UNUSUAL INSTALLATION REQUIREMENTS.
12. ALL SLUDGE PIPING UNLESS OTHERWISE NOTED SHALL BE SCH. 40 B.S.P. (WELDED CONNECTIONS). ABOVE GROUND PIPING SHALL BE RIGIDLY SUPPORTED. CLEAN-OUTS ARE REQUIRED AT DIRECTION CHANGE FITTING LOCATIONS OR AT SPECIFIC POINTS REQUESTED BY OWNER'S REPRESENTATIVE. EXPANSION/CONTRACTION CONDITIONS MUST BE CONSIDERED IN ORDER NOT TO PUT UNDUE STRESS ON PIPING OR SUPPORT UNITS.

VALVE SCHEDULE

(SEE DWG. FOR SIZE)

VALVE SIZE — 8" (F) — VALVE TYPE

- (A) BALL VALVE, P.V.C., .25"-6", TRUE UNION TYPE, SOCKET ENDS
- (B) BALL VALVE, C.P.V.C., .25"-6", TRUE UNION TYPE, SOCKET ENDS
- (C) BUTTERFLY VALVE, WAFER TYPE, IRON BODY, BUNA-N SEAT & SEAL, INFINITE POSITION LEVER OPERATOR
- (D) BUTTERFLY VALVE, WAFER TYPE, IRON BODY, EPDM SEAT & SEAL, INFINITE POSITION LEVER OPERATOR, (HIGH TEMP. AIR SERVICE)
- (E) BUTTERFLY VALVE, WAFER TYPE, BUNA-N SEAT & SEAL, IRON BODY, HANDWHEEL OPERATOR, (STEM EXTENSION IF REQ'D)
- (F) BUTTERFLY VALVE, WAFER TYPE, EPDM SEAT & SEAL, IRON BODY, HANDWHEEL OPERATOR, STEM EXTENSION IF REQ'D, (HIGH TEMP. AIR SERVICE)
- (G) BUTTERFLY VALVE, LUG TYPE, IRON BODY, EPDM SEAT & SEAL, INFINITE POSITION LEVER OPERATOR, (HIGH TEMP. AIR SERVICE)
- (H) BUTTERFLY VALVE, LUG TYPE, 8"-48", IRON BODY, BUNA-N SEAT & SEAL, HANDWHEEL OPERATOR, STEM EXTENSION IF REQ'D,
- (I) BUTTERFLY VALVE, LUG TYPE, 8"-48", IRON BODY, BUNA-N SEAT & SEAL, CHAINWHEEL OPERATOR,
- (J) BUTTERFLY VALVE, LUG TYPE, 8"-48", IRON BODY, EPDM SEAT & SEAL, CHAINWHEEL OPERATOR, (HIGH TEMP. AIR SERVICE)
- (K) BUTTERFLY VALVE, MECHANICAL JOINT, 4"-24", AWWA C504, IRON BODY, 304SS SEAT, UNDERGROUND SERVICE, 2" NUT OPERATOR
- (L) BUTTERFLY VALVE, P.V.C., 4"-10", EPDM SEAT, LEVER OPERATOR, STEM EXTENSION IF REQ'D
- (M) CHECK VALVE, SPLIT DISC, WAFER TYPE, 2"-72", IRON BODY, (HIGH TEMP. AIR SERVICE) TECHNOCHECK SHORT FORM STYLE 5118 (O.A.E.)
- (N) CHECK VALVE, NO SLAM, 2"-24", IRON BODY, RUBBER FLAPPER
- (O) CHECK VALVE, HORIZONTAL SWING TYPE, 2"-24", IRON BODY BRONZE MOUNTED, LEVER & WEIGHT
- (P) CHECK VALVE, SILENT WAFER, 1"-10",
- (Q) CHECK VALVE, SINKING BALL TYPE, 3"-14", IRON BODY, EPOXY COATED, BUNA-N COVERED BALL
- (R) CHECK VALVE, BALL TYPE, TRUE UNION, P.V.C., SOCKET ENDS
- (S) CHECK VALVE, BALL TYPE, TRUE UNION, C.P.V.C., SOCKET ENDS
- (T) GATE VALVE, SOLID WEDGE, 2"-24", FLANGED, NON-RISING STEM, HANDWHEEL OPERATOR, IRON BODY, BRONZE MOUNTED
- (U) GATE VALVE, SOLID WEDGE, 14"-48", FLANGED, NON-RISING STEM, BEVELED GEAR HANDWHEEL OPERATOR, IRON BODY, BRONZE MOUNTED
- (V) GATE VALVE, SOLID WEDGE, 2"-24", FLANGED, NON-RISING STEM, CHAINWHEEL OPERATOR, IRON BODY, BRONZE MOUNTED
- (W) GATE VALVE, SOLID WEDGE, 2"-48", FLANGED, NON-RISING STEM, 2" NUT OPERATOR, IRON BODY, BRONZE MOUNTED
- (X) GATE VALVE, SOLID WEDGE, 2"-12", MECHANICAL JOINT, NON-RISING STEM, 2" NUT OPERATOR, IRON BODY, BRONZE MOUNTED
- (Y) GATE VALVE, SOLID WEDGE, 14"-48", MECHANICAL JOINT, BEVELED GEAR, 2" NUT OPERATOR, IRON BODY, BRONZE MOUNTED
- (Z) KNIFE GATE VALVE, LEVER OPERATOR, 100% PORT
- (AA) KNIFE GATE VALVE, HANDWHEEL OPERATOR, 100% PORT
- (BB) KNIFE GATE VALVE, GEAR OPERATOR w/HANDWHEEL, 100% PORT
- (CC) KNIFE GATE VALVE, CHAINWHEEL OPERATOR, 100% PORT
- (DD) KNIFE GATE VALVE, GEAR OPERATOR w/CHAINWHEEL, 100% PORT
- (EE) PLUG VALVE (ECCENTRIC), CAST IRON, FLANGED, 2" NUT OPERATOR w/REMOVABLE LEVER, 3"-8", NICKEL SEAT, (STEM EXTENSION IF REQ'D)
- (FF) PLUG VALVE (ECCENTRIC), CAST IRON, 4"-36", FLANGED, WORM GEAR w/HANDWHEEL OPERATOR, NICKEL SEAT, (STEM EXTENSION IF REQ'D)
- (GG) PLUG VALVE (ECCENTRIC), CAST IRON, 3"-8", MECHANICAL JOINT, 2" NUT OPERATOR, NICKEL SEAT, 100% PORT (STEM EXTENSION IF REQ'D)
- (HH) PLUG VALVE (ECCENTRIC), CAST IRON, 4"-36", MECHANICAL JOINT, WORM GEAR w/2" NUT OPERATOR, NICKEL SEAT, 100% PORT (STEM EXTENSION IF REQ'D)
- (II) PLUG VALVE (ECCENTRIC), CAST IRON, 3"-8", FLANGED, CHAIN WHEEL OPERATOR, NICKEL SEAT, 100% PORT (STEM EXTENSION IF REQ'D)
- (JJ) PLUG VALVE (ECCENTRIC), CAST IRON, 4"-36", FLANGED, 100% PORT, WORM GEAR w/CHAINWHEEL OPERATOR, NICKEL SEAT, (STEM EXTENSION IF REQ'D)

PIPE SCHEDULE

(SEE DWG. FOR SIZE)

PIPE SIZE — 8" (14) — PIPE TYPE

1. CLASS 350, CEMENT LINED, PUSH-ON, JOINT DUCTILE IRON PIPE CLASS 53, CEMENT LINED, FLANGED DUCTILE IRON PIPE
2. CLASS 350, EPOXY LINED, PUSH-ON, JOINT DUCTILE IRON PIPE, CLASS 53, EPOXY LINED, FLANGED DUCTILE IRON PIPE
3. 4" DIA. & UNDER, USE SCH. 80 P.V.C PIPE & FITTINGS w/PURPLE PRIMER & HEAVY DUTY GRAY INDUSTRIAL GRADE PVC SOLVENT CEMENT 6" DIA. & OVER, USE SCH. 40 P.V.C. PIPE & FITTINGS w/PURPLE PRIMER & EXTRA HEAVY DUTY GRAY INDUSTRIAL GRADE PVC SOLVENT CEMENT
4. SDR17 HDPE PIPE (HIGH DENSITY POLYETHYLENE PIPE) AND HDPE PIPE FITTINGS
5. SCH. 20 BLACK STEEL PIPE & FITTINGS (10" & LARGER)
6. SCH. 40 BLACK STEEL PIPE & FITTINGS (8" & SMALLER)
7. P.V.C. DRAIN WASTE VENT PIPE & FITTINGS
8. SDR 18 P.V.C. PIPE & MECHANICAL JOINT FITTINGS
9. SCH. 40 GALV. STEEL PIPE & FITTINGS (NPT)
10. SCH. 80 GALV. STEEL PIPE & FITTINGS (NPT)
11. REINFORCED CONCRETE PIPE (CLASS-III)
12. SCH. 80 C.P.V.C. PIPE & FITTINGS w/PURPLE PRIMER & HEAVY DUTY LIGHT GRAY INDUSTRIAL GRADE CPVC SOLVENT CEMENT
13. SCH. 80 P.V.D.F. PIPE & FITTINGS, THREADED. TEFLON TAPE THREADS (RED KYNAR)
14. 4" TO 12" CLASS 150 C-900 P.V.C. PRESSURE PIPE 14" TO 24" CLASS 150 C-905 P.V.C. PRESSURE PIPE MECHANICAL JOINT FITTINGS (BELOW GRADE)
15. SDR 35 P.V.C. GRAVITY SEWER PIPE & FITTINGS (4"-15") SDR 42 P.V.C. GRAVITY SEWER PIPE & FITTINGS (18" & LARGER) MECHANICAL JOINT FITTINGS BELOW GRADE
16. COPPER PIPE, TYPE K, L, OR M, w/BRAZED FITTINGS, FOR COMPRESSED AIR OR WATER SERVICE
17. SCH.10 316 STAINLESS STEEL PIPE & FITTINGS
18. SCH.10 304 STAINLESS STEEL PIPE & FITTINGS

PIPE FITTING SYMBOLS SCHEDULE

FITTING SIZE — (8"-04) — FITTING TYPE

B.S.P. WELDING FITTINGS	00	90° S.R. BEND
	01	90° L.R. BEND
	02	–
	03	–
	04	45° L.R. BEND
	05	TEE
	06	CROSS
	07	CONC. REDUCER
	08	ECC. REDUCER
	09	LATERAL
MECH. JOINT LINED FITTINGS	10	–
	11	90° BEND
	12	11 1/4° BEND
	13	22 1/2° BEND
	14	45° BEND
	15	TEE
	16	CROSS
	17	CONC. REDUCER
	18	ECC. REDUCER
	19	LATERAL
FLANGED LINED FITTINGS	20	90° S.R. BEND
	21	90° L.R. BEND
	22	11 1/4° BEND
	23	22 1/2° BEND
	24	45° BEND
	25	TEE
	26	CROSS
	27	CONC. REDUCER
	28	ECC. REDUCER
	29	LATERAL
P.V.C./C.P.V.C. SOLVENT WELD FITTINGS	30	–
	31	90° BEND
	32	11 1/4° BEND
	33	22 1/2° BEND
	34	45° BEND
	35	TEE
	36	CROSS
	37	CONC. REDUCER
	38	ECC. REDUCER
	39	WYE
	40	–
	* 41	EXPANSION JOINT
	42	FLEXIBLE COUPLING

SEE PIPE SCHEDULE & PLANS FOR PIPE TYPE, TO DETERMINE FITTING MATERIAL & PRESSURE TYPE

* PIPE EXPANSION JOINTS TO BE REDFLEX TYPE J-1, SINGLE ARCH (UNLESS NOTED OTHERWISE ON DRAWINGS), w/SPLIT GALV. RETAINER RINGS. (OR APPROVED EQUAL)

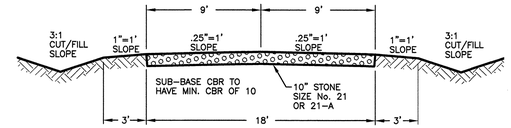

TYPICAL ROAD CROSS SECTION (1 / D100)

NOT TO SCALE

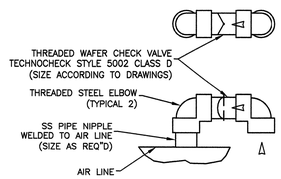

VACUUM BREAKER DETAIL (4 / D100)

NOT TO SCALE

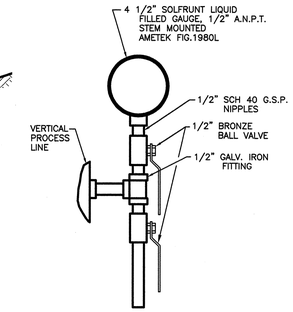

GAUGE DETAIL w/ AIR VENT/SAMPLE TAP (2 / D100)

NOT TO SCALE

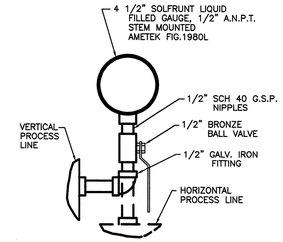

GAUGE DETAIL (3 / D100)

NOT TO SCALE

DETAIL NUMBER — 2 / 2 — SHEET DETAIL IS DRAWN ON

SECTION NUMBER — 2 / 2 — SHEET SECTION IS DRAWN ON

JOHN HAGER REID LICENSE No. 6580 PROFESSIONAL ENGINEER DELAWARE

11/23/15

John H. Reid P.E.

DRAWN BY:	GDS
DESIGNED BY:	JHR
CHKD BY:	AEZ

THE INFORMATION CONTAINED HEREIN SHALL BE CONSIDERED PROPRIETARY TO REID ENGINEERING COMPANY, INC. ANY USE OR RE-PRODUCTION OF THIS INFORMATION WITHOUT THE EXPRESS WRITTEN CONSENT FROM REID ENGINEERING COMPANY, INC. IS HEREBY PROHIBITED.

REID ENGINEERING COMPANY, INC.

1210 Princess Anne Street
Fredericksburg, Virginia 22401
Tel:(540) 371-8500 Fax:(540) 371-8576

MISCELLANEOUS NOTES & DETAILS

ALLEN HARIM, LLC
PHASE TWO
WASTEWATER TREATMENT SYSTEM
UPGRADE & EXPANSION

HARBESON, DELAWARE

DATE:	11-23-15	PROJECT NO.	AH02A
SCALE:	NONE	DWG NO:	D100

© COPYRIGHT 2015 – REID ENGINEERING COMPANY, INC.

NO.	BY	CHKD	APRV	REVISION	DATE

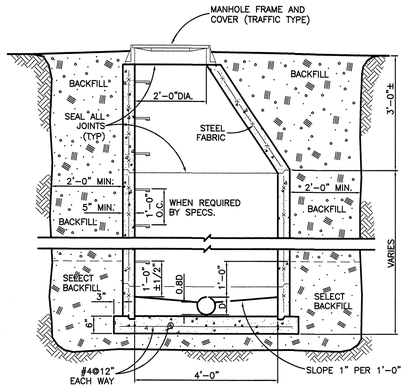

PRECAST CONCRETE MANHOLE

NO SCALE

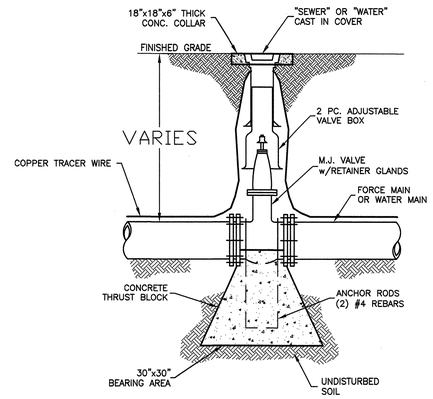

TYPICAL BURIED VALVE INSTALLATION DETAIL

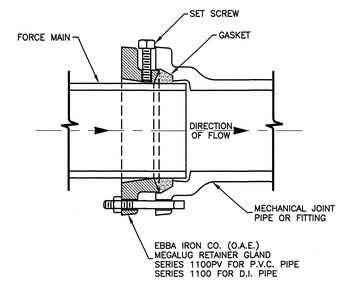

1. TIGHTEN T-HEAD BOLTS OF JOINT IN USUAL MANNER PER AWWA RECOMMENDATIONS
2. TIGHTEN MEGALUG SO THAT ALL OF THE WEDGES ARE IN FIRM CONTACT WITH THE PIPE. TIGHTEN EACH MEGALUG IN AN ALTERNATE MANNER, TWISTING THE NUTS OFF IN A CLOCKWISE DIRECTION.

MECHANICAL JOINT & RETAINER GLAND

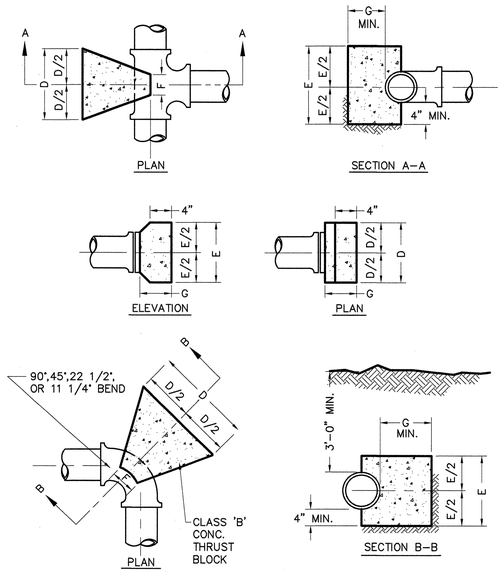

THRUST BLOCK DIMENSIONS									
FITTING		PIPE SIZE FOR ELBOWS & BRANCH SIZE FOR TEES							
		3"& 4"	6"	8"	10"	12"	16"	18"	20"
11 1/4° BEND	D	1'-0"	1'-0"	1'-0"	1'-6"	1'-6"	2'-0"	2'-0"	2'-0"
	E	1'-0"	1'-0"	1'-4"	1'-6"	1'-6"	2'-0"	2'-0"	2'-0"
	F	6"	6"	8"	8"	1'-0"	1'-0"	1'-0"	1'-0"
	G	1'-0"	1'-0"	1'-0"	1'-6"	1'-6"	1'-6"	1'-6"	1'-6"
22 1/2° BEND	D	1'-0"	1'-0"	1'-6"	1'-6"	2'-0"	2'-6"	3'-0"	3'-0"
	E	1'-0"	1'-0"	1'-6"	1'-6"	2'-0"	2'-6"	3'-0"	3'-0"
	F	6"	6"	8"	8"	1'-0"	1'-0"	1'-3"	1'-3"
	G	1'-0"	1'-0"	1'-0"	1'-6"	1'-6"	1'-6"	1'-6"	1'-6"
45° BEND	D	1'-0"	1'-6"	2'-0"	2'-6"	2'-6"	3'-6"	4'-0"	4'-6"
	E	1'-0"	1'-6"	2'-0"	2'-6"	2'-6"	3'-6"	4'-0"	4'-6"
	F	6"	6"	8"	8"	1'-0"	1'-0"	1'-3"	1'-3"
	G	1'-0"	1'-0"	1'-0"	1'-6"	1'-6"	1'-6"	1'-6"	1'-6"
90° BEND & TEE	D	1'-6"	2'-0"	2'-6"	3'-0"	3'-6"	4'-6"	5'-0"	6'-0"
	E	1'-6"	2'-0"	2'-6"	3'-0"	3'-6"	4'-6"	5'-0"	6'-0"
	F	6"	6"	8"	8"	1'-0"	1'-0"	1'-3"	1'-3"
	G	1'-0"	1'-0"	1'-0"	1'-6"	1'-6"	1'-6"	1'-6"	1'-6"
PLUGS & CAPS	D	1'-6"	2'-0"	2'-6"	3'-0"	3'-6"	4'-0"	5'-0"	5'-6"
	E	1'-6"	2'-0"	2'-6"	3'-0"	3'-6	4'-6"	5'-0"	5'-6"
	G	1'-0"	1'-0"	1'-0"	1'-0"	1'-6"	1'-6"	1'-6"	1'-6"

NOTES:
1. fc = 3,000 P.S.I. AT 28 DAYS.
2. CARRY ALL BEARING SURFACES TO UNDISTURBED EARTH OR FIRM GROUND.
3. THE TABLE ABOVE IS BASED ON A SOIL BEARING PRESSURE OF 2,000 P.S.F.; R= 2PA SIN 0/2-& A TEST PRESSURE OF 1.5 X WORKING PRESSURE (150 P.S.I.). WHERE THE WATER PRESSURE AND SOIL PRESSURE IS DIFFERENT, THE AREA OF CONCRETE BLOCK (i.e. DxE) SHALL BE PROPORTIONED ACCORDINGLY. AREA ADJUSTMENT FOR REQUIRED PRESSURE SHALL BE MADE FIRST BEFORE MAKING ADJUSTMENT FOR SOIL BEARING PRESSURE.
3. TAPPING ASSEMBLIES & SLEEVES TO BE CONCRETE BLOCKED AS COMPARABLE SIZED TEES.

CONCRETE THRUST BLOCKS FOR PIPE FITTINGS

NOTE:
MATCH EXISTING SURFACE & BASE MATERIALS IF TRENCH EXTENDS UNDER EXISTING ROAD

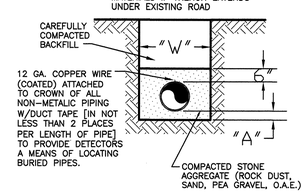

PIPE DIAMETER	"A"	"W"
3"-8"	4"	28"
10"	4"	28"
12"	4"	32"
14"	4"	32"
16"	4"	36"
18"	4.5"	38"
20"	5.25"	40"
24"	6"	44"

STANDARD BEDDING DETAIL

(N.T.S.)

NOTE:
MATCH EXISTING SURFACE & BASE MATERIALS OF EXISTING ROAD SURFACE

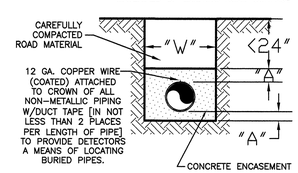

PIPE DIA.	"A"	"W"
3"-8"		28"
10"		28"
12"		32"
14"	6"	32"
16"		36"
18"		38"
20"		40"
24"		44"

CONCRETE ENCASED BEDDING DETAIL

(N.T.S.)

JOHN HAGER REID LICENSE No. 6580 PROFESSIONAL ENGINEER
John H. Reid P.E.

DRAWN BY:	GDS
DESIGNED BY:	JHR
CHKD BY:	AEZ

THE INFORMATION CONTAINED HEREIN SHALL BE CONSIDERED PROPRIETARY TO REID ENGINEERING COMPANY, INC. ANY USE OR RE-PRODUCTION OF THIS INFORMATION WITHOUT THE EXPRESS WRITTEN CONSENT FROM REID ENGINEERING COMPANY, INC. IS HEREBY PROHIBITED.

REID ENGINEERING COMPANY, INC.
1210 Princess Anne Street
Fredericksburg, Virginia 22401
Tel:(540) 371-8500 Fax:(540) 371-8576

GENERAL PIPING NOTES & DETAILS

ALLEN HARIM, LLC
PHASE TWO
WASTEWATER TREATMENT SYSTEM
UPGRADE & EXPANSION

HARBESON, DELAWARE

DATE:	11-23-15	PROJECT NO.	AH02A
SCALE:	NONE	DWG NO:	D200

© COPYRIGHT 2015 – REID ENGINEERING COMPANY, INC.

NO.	BY	CHKD	APRV	REVISION	DATE

CHEMICAL SYSTEM NOTES

1. P.V.C.(SCH.80) PIPE TO BE USED FOR ALL CHEMICAL PIPING (EXCEPT SULFURIC ACID, CAUSTIC, ALUMINUM CHLORIDE, FERRIC CHLORIDE & METHANOL). P.C.V. PIPING w/SOLVENT WELDED FITTINGS & VALVES, TO BE ASSEMBLED USING PURPLE PRIMER & HEAVY DUTY GRAY INDUSTRIAL GRADE P.V.C. SOLVENT CEMENT. NIBCO/CHEMTROL (O.A.E.)
2. C.P.V.C.(SCH.80) PIPE TO BE USED FOR CAUSTIC(50%), ALUMINUM CHLORIDE, FERRIC CHLORIDE & 66 BAUME'(93%) SULFURIC ACID. C.P.V.C.PIPING w/SOLVENT WELDED FITTINGS & VALVES TO BE ASSEMBLED USING PURPLE PRIMER & HEAVY DUTY LIGHT GRAY INDUSTRIAL GRADE C.P.V.C. SOLVENT CEMENT. NIBCO/CHEMTROL (O.A.E.)
3. SULFURIC ACID 66 BAUME' (93%) HIGH TEMPERATURE CONDITIONS TO BE SCH. 80 P.V.D.F. (RED KYNAR) W/THREADED FITTINGS & VALVES. TO BE ASSEMBLED USING TEFLON TAPE AS RECOMMENDED BY PIPE MANUFACTURER. NIBCO/CHEMTROL (O.A.E.)
4. METHANOL PIPING TO BE SCH.40 BLACK STEEL PIPE & FITTINGS
5. PROVIDE ADAPTERS & BUSHINGS AS REQUIRED TO SUIT EQUIPMENT CONNECTIONS AND CHANGES IN PIPE SIZE.
6. CHEMICAL PUMPS TO BE SUPPLIED BY OWNER. CONTRACTOR TO VERIFY PUMP STAND DIMENSIONS WITH PUMPS SUPPLIED.
7. PUMP STAND FRAMING TO BE 3"x 3"x 1/4" STAINLESS STEEL ANGLE.
8. CAUSTIC PIPING SYSTEM MUST BE DRAINED AND FORCED AIR PURGED, BEFORE WATER FLUSHING, PRIOR TO EXTENDED DOWN TIME OR PRIOR TO PERFORMING MAINTENANCE.
9. ACID PIPING SYSTEM MUST BE DRAINED AND FORCED AIR PURGED, BEFORE WATER FLUSHING, PRIOR TO EXTENDED DOWN TIME OR PRIOR TO PERFORMING MAINTENANCE.
10. PRESSURE RELIEF LINES TO BE ROUTED BACK TO TANKS, OR TO FLOOR DRAINS. (1/4" BELOW BOTTOM OF GRATING)
11. PRESSURE RELIEF LINES & MIX TANK DRAINS TO BE ROUTED TO FLOOR DRAINS. (1/4" BELOW BOTTOM OF GRATING)
12. CAUSTIC SOLUTION FEED LINES (ABOVE & BELOW GRADE) EXPOSED TO TEMPERATURES BELOW 60° F MUST HAVE WATERPROOF INSULATION,HEAT TRACING, AND A RIGID WATERPROOF JACKET TO MAINTAIN CAUSTIC SOLUTION AT A MINIMUM OF 60° F.
13. EXPOSED CHEMICAL SOLUTION FEED LINES TO HAVE WATERPROOF INSULATION, HEAT TRACING, AND A RIGID WATERPROOF JACKET TO BELOW FROST LINE (24" MIN.). OR 6" ABOVE HIGH WATER LEVEL. SEE NOTE No.10 FOR EXCEPTION.
14. PROVIDE PIPE SUPPORTS AT 5' MAX. O.C. (4' MAX. P.V.D.F.). UNISTRUT TYPE SUPPORTS REQ'D. WHERE WALL SUPPORTS ARE NOT AVAILABLE & PROVIDE HORIZONTAL BRACING TO PREVENT MOVEMENT OF PIPING.
15. CONTRACTOR TO PROVIDE AN OSHA WARNING SIGN AT CHEMICAL BULK TANK (2 OR MORE) FILL STATION "DANGER – DO NOT ALLOW CHEMICALS TO MIX".
16. CHEMICAL PIPING TO BE IDENTIFIED BY CONTENT AND FLOW DIRECTION WITH PIPE MARKERS THAT CONFORM TO ANSI/OSHA SPECIFICATIONS. ANSI A13.1–1981
17. DO NOT USE LAP OR RAISED FACE FLANGES WHEN MATING TO CHEMICAL TANKS FLANGES. USE 150# FLAT FACE FLANGES ONLY, WITH 3/16" THICK FULL FACE GASKETS. GASKET HARDNESS TO BE 40–50 DUROMETER.
18. USE FLAT WASHERS UNDER ALL BOLT HEADS & NUTS. MAXIMUM TORQUE ON DRY BOLT THREADS – 50 ft/lb. MAXIMUM TORQUE ON LUBRICATED BOLT THREADS – 35 ft/lb.
19. SUPPORT ALL PIPING INDEPENDENT OF TANK UNLESS SPECIAL MOUNTINGS ARE PROVIDED ON TANK.

CHEMICAL EQUIPMENT SPECS. (C.P.V.C.)

- (A) C.P.V.C. BALL VALVE, TRUE UNION, SOCKET TYPE, PLAST–O–MATIC (O.A.E.)
- (B) C.P.V.C. BALL CHECK VALVE, TRUE UNION, SOCKET TYPE, PLAST–O–MATIC (O.A.E.)
- (C) C.P.V.C. PRESSURE RELIEF VALVE THREADED, PLAST–O–MATIC SERIES RVDM (O.A.E.)
- (D) TEFLON DIAPHRAGM BACK PRESSURE VALVE THREADED, PLAST–O–MATIC SERIES RVDT (O.A.E.)

CHEMICAL EQUIPMENT SPECS. (P.V.C.)

- (A) P.V.C. BALL VALVE, TRUE UNION SOCKET TYPE, PLAST–O–MATIC (O.A.E.)
- (B) P.V.C. BALL CHECK VALVE, TRUE UNION SOCKET TYPE, PLAST–O–MATIC (O.A.E.)
- (C) P.V.C. PRESSURE RELIEF VALVE THREADED, PLAST–O–MATIC SERIES RVDM (O.A.E.)
- (D) TEFLON DIAPHRAGM BACK PRESSURE VALVE THREADED, PLAST–O–MATIC SERIES RVDT (O.A.E.)

PIPE SCHEDULE

(SEE DWG. FOR PIPE SIZE)

- (3) SCH. 80 P.V.C PIPE & FITTINGS w/PURPLE PRIMER & HEAVY DUTY GRAY INDUSTRIAL GRADE PVC SOLVENT CEMENT
- (6) SCH. 40 BLACK STEEL PIPE & FITTINGS
- (12) SCH. 80 C.P.V.C. PIPE & FITTINGS w/PURPLE PRIMER & HEAVY DUTY LIGHT GRAY INDUSTRIAL GRADE CPVC SOLVENT CEMENT
- (13) SCH. 80 P.V.D.F. PIPE & FITTINGS, THREADED. TEFLON TAPE THREADS (RED KYNAR)

PIPE FITTING SYMBOLS SCHEDULE

PIPE SIZE — (8"–04) — ITEM NUMBER

B.S.P. WELDING FITTINGS OR P.V.C. SOLVENT WELD FITTINGS *

31	90° BEND
32	11 1/4° BEND
33	22 1/2° BEND
34	45° BEND
35	TEE
36	CROSS
37	CONCENTRIC REDUCER
38	ECCENTRIC REDUCER
39	LATERAL
40	FLANGE, WELD NECK
41	FLEXIBLE COUPLING
42	COUPLING

* SEE PIPE SCHEDULE & PLANS FOR REFERENCED TYPE OF FITTINGS & TYPE OF WELDING [P.V.C. SOLVENT OR METAL] REQUIRED

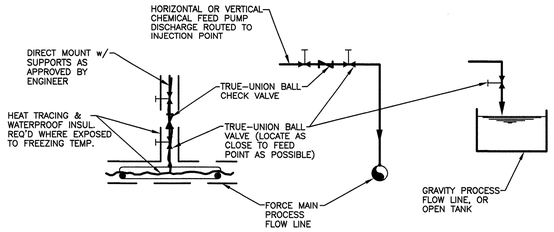

CHEMICAL FEED POINTS (1 / D300)
N.T.S.

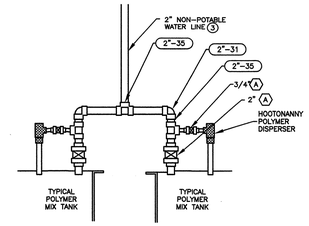

DETAIL (2 / D300)
SCALE: 1/2"=1'–0"

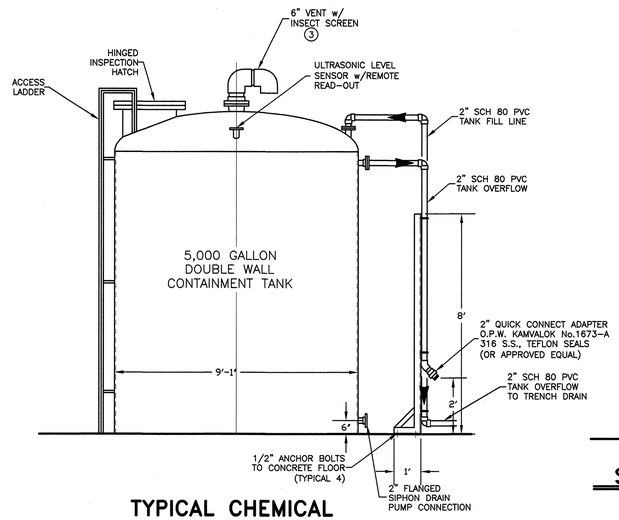

TYPICAL CHEMICAL BULK TANK DETAIL (3 / D300)
SCALE: 3/8"=1'–0"

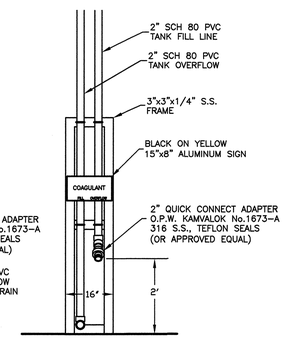

SECTION (4 / D300)
SCALE: 1/2"=1'–0"

DETAIL NUMBER (2 / 2) — SHEET DETAIL IS DRAWN ON

SECTION NUMBER (2 / 2) — SHEET SECTION IS DRAWN ON

© COPYRIGHT 2015 – REID ENGINEERING COMPANY, INC.

JOHN HAGER REID LICENSE NO. 6580 PROFESSIONAL ENGINEER COMMONWEALTH OF VIRGINIA
11/23/15
John H. Reid P.E.

DRAWN BY:	GDS
DESIGNED BY:	JHR
CHKD BY:	AEZ

THE INFORMATION CONTAINED HEREIN SHALL BE CONSIDERED PROPRIETARY TO REID ENGINEERING COMPANY, INC. ANY USE OR RE–PRODUCTION OF THIS INFORMATION WITHOUT THE EXPRESS WRITTEN CONSENT FROM REID ENGINEERING COMPANY, INC. IS HEREBY PROHIBITED.

REID ENGINEERING COMPANY, INC.
1210 Princess Anne Street
Fredericksburg, Virginia 22401
Tel:(540) 371–8500 Fax:(540) 371–8576

GENERAL CHEMICAL NOTES & DETAILS

ALLEN HARIM, LLC
PHASE TWO
WASTEWATER TREATMENT SYSTEM
UPGRADE & EXPANSION

HARBESON, DELAWARE

DATE:	11–23–15	PROJECT NO.	AH02A
SCALE:	NONE	DWG NO:	D100